Series and parallel circuits

4.2.2 · Electricity · revision notes

The rules for current, potential difference and resistance in series and parallel circuits, and how to use them in multi-step calculations. You need to explain why adding resistors in series increases the total resistance but adding them in parallel decreases it. You do not need to calculate the total resistance of resistors in parallel.

Key facts

- Series: same current through each component
- Series: $R_{total} = R_1 + R_2$
- Parallel: $I_{total} = I_1 + I_2$
- Add a resistor in series → total resistance up; in parallel → total resistance down
- Series: $V_{total} = V_1 + V_2$ (pd is shared)
- Parallel: same pd across each branch
- Parallel: total resistance is less than the smallest resistor

Notes

Series circuits

- Components in **series** are connected one after another in a single loop.
- The **current** is the same through each component.
- The total pd of the supply is **shared** between the components: $V_{total} = V_1 + V_2$.
- The total resistance is the sum of the resistances: $\mathbf{R_{total} = R_1 + R_2}$.
- The component with the bigger resistance gets the bigger share of the pd, because V = I R and the current is the same.

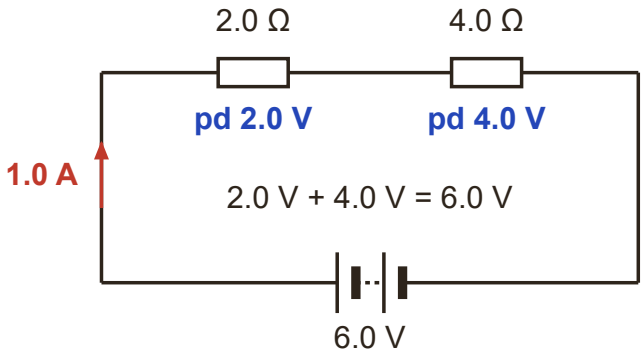

Series: same current; the pds add up to the supply pd (R_{total} = 6.0 Ω).

- A variable resistor in series controls the current: increasing its resistance increases the total resistance, so the current and the pd across the other components decrease.
- If one component in a series loop breaks, the circuit is incomplete, so there is no current and every component stops working.

Parallel circuits

- Components in **parallel** are each on their own branch, connected across the same two points.
- The **pd across each branch is the same**. If each branch is connected straight across the supply, each branch has the full supply pd.
- The total current is the sum of the currents through the branches: $I_{total} = I_1 + I_2$.

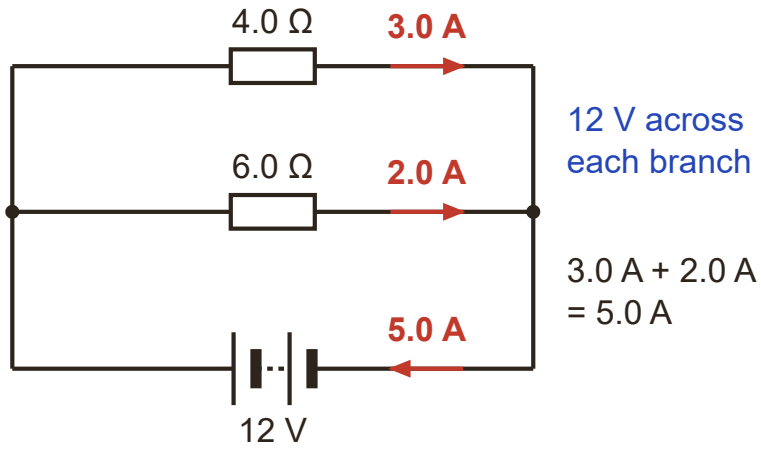

Parallel: same pd across each branch; the branch currents add up.

- The total resistance of two resistors in parallel is **less than the smallest** of the two resistances.
- Each branch can have its own switch, so each component can be turned on and off separately.

Why adding resistors changes the total resistance

- **Series**: an extra resistor means the supply pd is shared between more resistors, so the pd across each one is smaller and the current is smaller. A smaller current from the same supply pd means a larger total resistance.
- **Parallel**: an extra resistor adds another path for the charge. The new branch has the full supply pd across it, so it carries its own current and the total current increases. A larger current from the same supply pd means a smaller total resistance.

Solving circuit problems

- Series: find R_{total}, then $I = V_{supply} \div R_{total}$, then the pd across each resistor using $V = I R$. Check that the pds add up to the supply pd.
- Parallel: use the pd across each branch to find each branch current with $I = V \div R$, then add them to get the total current. Grade 7+ only
- Some circuits have series and parallel parts. Work out one part at a time, labelling the diagram as you go. Grade 7+ only

How to answer each type of question

Calculate current and pd in a series circuit

4 marks | Grade 5

1. Add the resistances to get R_{total}.
2. Find the current: $I = V_{supply} \div R_{total}$.
3. Find the pd across one resistor: $V = I R$, using that resistor's resistance only.

Example. A 12 V battery is connected in series with a 4.0 Ω resistor and an 8.0 Ω resistor.
(a) Calculate the total resistance of the circuit.
(b) Calculate the current in the circuit.
(c) Calculate the potential difference across the 8.0 Ω resistor.

Model answer.

(a) $R = 4.0 + 8.0 = 12\ \Omega$ (1)

(b) $I = V \div R = 12 \div 12$ (1)

$I = 1.0\ A$ (1)

(c) $V = I R = 1.0 \times 8.0 = 8.0\ V$ (1)

Find an unknown resistance in a series circuit

4 marks | Grade 7

1. Find the pd across the known resistor with $V = I R$.
2. Subtract it from the supply pd to get the pd across the unknown component.
3. Use $R = V \div I$ with the same current (or find $R_{total} = V \div I$ and subtract the known resistance).

Example. A 9.0 V supply is connected in series with a lamp and a 15 Ω resistor. The current in the circuit is 0.20 A.
Calculate the resistance of the lamp.

Model answer.

pd across the resistor $= 0.20 \times 15 = 3.0\ V$ (1)

pd across the lamp $= 9.0 - 3.0 = 6.0\ V$ (1)

$R = V \div I = 6.0 \div 0.20$ (1)

$R = 30\ \Omega$ (1)

Calculate the total current in a parallel circuit

3 marks | Grade 8

1. Each branch has the same pd as the supply (if connected straight across it).
2. Find each branch current with I = V ÷ R.
3. Add the branch currents to get the total current.

Example. A 6.0 V battery is connected to a 3.0 Ω resistor and a 12 Ω resistor in parallel.
Calculate the current from the battery.

Model answer.

The pd across each resistor is 6.0 V (1)

$I_1 = 6.0 \div 3.0 = 2.0$ A and $I_2 = 6.0 \div 12 = 0.50$ A (1)

Total current = 2.0 + 0.50 = 2.5 A (1)

Explain why the total resistance changes

2 to 3 marks | Grade 5

1. Say what the extra resistor does: shares the pd (series) or adds a path (parallel).
2. Say what happens to the current from the supply.
3. Link current to total resistance: same pd with more current means less resistance, and vice versa.

Example. A resistor is connected to a battery. A second resistor is then connected in parallel with the first.
Explain why the total resistance of the circuit decreases.

Model answer. The second resistor gives an extra path for the charge (1). The pd across each resistor is the same as the battery pd, so both resistors carry a current and the total current from the battery increases (1). The same pd driving a larger current means the total resistance is smaller (1).

Don’t lose marks

- Adding the resistances of resistors in parallel as if they were in series.
- Saying the current is shared in a series circuit. It is the pd that is shared; the current is the same.
- Using the whole supply pd with just one resistor in a series circuit.
- Thinking the total resistance in parallel is between the two values. It is less than the smallest.
- Explaining total resistance with just 'there are more resistors' without mentioning pd and current.

More tips

Memory tricks

- Series: Same current, Shared pd. Parallel: same Pd, current sPlits.
- Check a series answer: the pds must add up to the supply pd.
- Check a parallel answer: the total current must be bigger than any one branch current.
- Parallel sense check: the total resistance is always smaller than the smallest resistor.

Exam technique

- Label the circuit diagram with every value you know or work out (V, I and R).
- Write the rule you are using, e.g. 'series, so same current', so the examiner can follow your method.
- In 'explain' questions about total resistance, always mention both the pd and the current.

What each grade needs

What you need to be able to do, from the first marks up to the top grade.

Grade 3 — **Tell series and parallel circuits apart**
Series: one loop, one path. Parallel: two or more branches connected across the same two points.

Grade 4 — **State the series and parallel rules**
Series: same current, pd shared. Parallel: same pd across each branch, branch currents add up.

Grade 4 — **Add resistances in series**
Use $R_{total} = R_1 + R_2$.

Grade 5 — **Find a missing current or pd**
e.g. the supply pd equals the sum of the pds in series; the total current equals the sum of the branch currents.

Grade 5 — **Explain how added resistors change total resistance**
Series increases the total resistance; parallel decreases it.

Grade 5 — **Solve multi-step series circuit problems**
Find the total resistance, then I = V ÷ R, then the pd across each resistor with V = I R.

Grade 8 — **Solve parallel problems using branch currents**
Each branch has the full supply pd; find each branch current with I = V ÷ R and add them.

Free notes, Full packs, practice papers and mock exams at chhetriacademy.com. Written for this site; not taken from past papers. Stuck? 1-to-1 tutoring with a free 30-minute trial lesson.