Resistors

4.2.1.4 · Electricity · revision notes

How the resistance of ohmic conductors, filament lamps, diodes, thermistors and LDRs behaves, their I–V characteristics, and how thermistors and LDRs are used in circuits. Expect graph sketching and reading, 'explain the shape' questions and the I–V characteristics required practical.

Key facts

- Ohmic conductor (constant temperature): $I \propto V$, constant resistance, straight line through the origin
- Diode: current in one direction only; very high resistance in reverse
- LDR: light intensity up → resistance down
- I–V graph: current on the y-axis, pd on the x-axis
- Filament lamp: resistance increases as the filament's temperature increases
- Thermistor: temperature up → resistance down
- Resistance at a point on an I–V graph: $R = V \div I$

Notes

Ohmic conductors

- For an **ohmic conductor** (such as a fixed resistor) at **constant temperature**, the current is directly proportional to the potential difference.
- Its resistance stays the same as the current changes, so its I–V graph is a straight line through the origin.
- For lamps, diodes, thermistors and LDRs the resistance is **not constant**: it changes as the current through them changes.

I–V characteristics (current on the y-axis, pd on the x-axis)

- **Resistor at constant temperature**: a straight line through the origin, the same shape for negative values.
- **Filament lamp**: a curve through the origin that gets less steep as the pd increases (in both directions). As the current increases the filament gets hotter, and its resistance increases as its temperature increases.
- **Diode**: current flows in one direction only. In the forward direction the current stays almost zero until the pd reaches a small value, then rises steeply. In the reverse direction the diode has a very high resistance, so the current is (almost) zero.

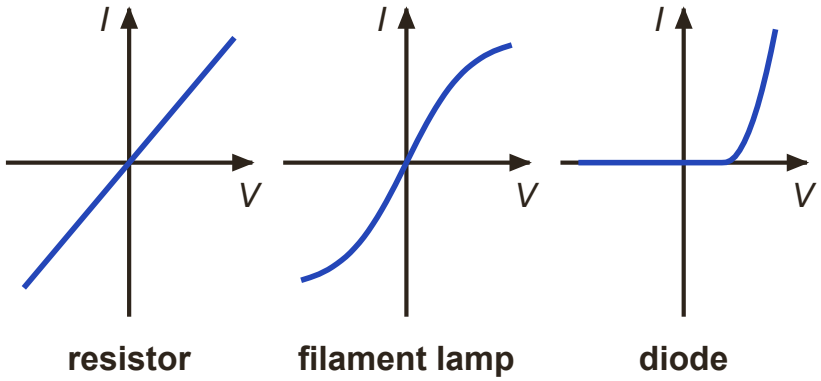

I–V characteristics: current (I) up, potential difference (V) across.

- For a straight line through the origin, a steeper line means a smaller resistance. For a curve, work out R = V ÷ I at the point you need.

Thermistors and LDRs

- **Thermistor**: resistance decreases as temperature increases. Used as a temperature sensor, e.g. in a thermostat that switches a heating system on and off.
- **LDR**: resistance decreases as light intensity increases. Used as a light sensor, e.g. in lights that switch on automatically when it gets dark.

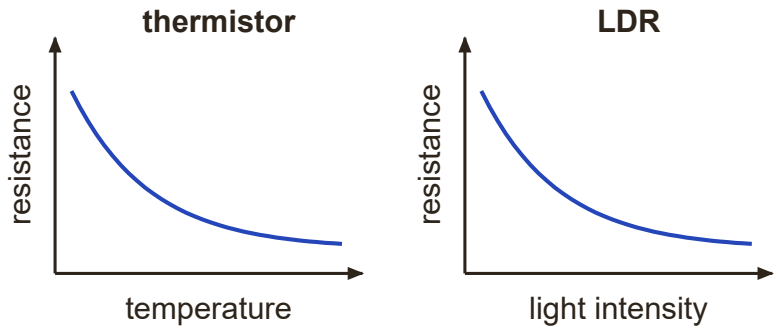

Thermistor and LDR: resistance falls as temperature or light intensity rises.

- Investigating a thermistor: put it in a beaker of water with a thermometer. Heat the water in steps and at each temperature measure the resistance (ohmmeter, or V and I then R = V ÷ I).
- Investigating an LDR: change the light intensity, e.g. move a lamp to different distances in a darkened room, and measure the resistance at each one.
- In series with a fixed resistor: if the sensor's resistance falls, the total resistance falls, so the current rises. The sensor takes a smaller share of the supply pd, and the pd across the fixed resistor rises. Grade 7+ only

Required practical: I–V characteristics

- Connect the component in series with an ammeter, a variable resistor and the supply, with a voltmeter in parallel across the component.

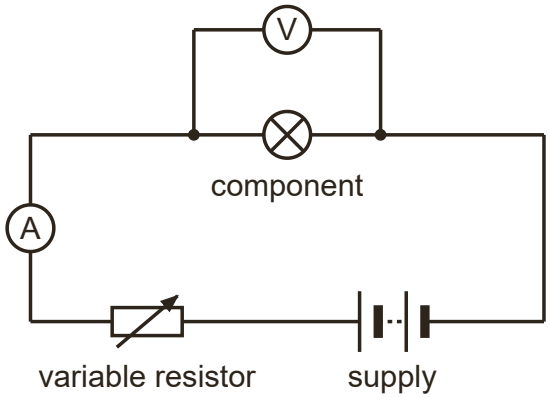

Change the variable resistor to get a range of readings; reverse the component for negative values.

- Adjust the variable resistor to get a range of pd values, and record V and I each time.
- Reverse the connections to the component to get negative values of V and I.
- Keep the resistor at constant temperature: use small currents and switch off between readings. Repeat the readings and calculate means.
- Plot I against V. Do this for a resistor at constant temperature, a filament lamp and a diode.

How to answer each type of question

Sketch or identify an I–V graph

1 to 3 marks | Grade 5

1. Label the axes: current (y) and potential difference (x), crossing at the origin.
2. Resistor: straight line through the origin. Lamp: S-shaped curve that flattens at both ends. Diode: current only for positive pd, rising steeply after a small pd.
3. Show negative values if the question asks for them.

Example. Describe the shape of the I–V graph for a filament lamp, for positive and negative values of potential difference.

Model answer.

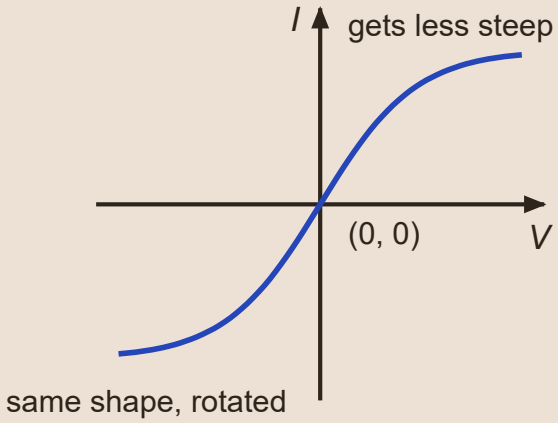

The curve passes through the origin (1). The curve gets less steep (flattens) as the pd increases (1). The graph has the same shape for negative values, as if rotated half a turn about the origin (1).

Explain the shape of the filament lamp graph

3 marks | Grade 6

1. Say that as the pd increases, the current increases.
2. Say that the filament gets hotter.
3. Say that its resistance increases as its temperature increases, so the current increases by less for each extra volt.

Example. Explain why the I–V graph for a filament lamp is not a straight line.

Model answer. As the pd increases, the current through the filament increases (1). The filament gets hotter / its temperature increases (1). The resistance of the filament increases as its temperature increases, so the current does not increase in proportion to the pd (1).

Calculate resistance from graph readings

2 to 3 marks | Grade 5

1. Read a pair of values (V and I) from the graph at the point asked about.
2. Use R = V ÷ I for that point. Do not use the gradient of a curve.
3. Compare values to describe how the resistance changes.

Example. At a potential difference of 6.0 V the current through a filament lamp is 0.25 A. At 12 V the current is 0.40 A.
(a) Calculate the resistance of the lamp at 6.0 V and at 12 V.
(b) Describe how the resistance of the lamp changes as the potential difference increases.

Model answer.

(a) R = 6.0 ÷ 0.25 = 24 Ω (1)

R = 12 ÷ 0.40 = 30 Ω (1)

(b) The resistance increases as the pd increases (1)

Explain how a sensing circuit works

3 to 4 marks | Grade 7

1. Start with what happens to the sensor's resistance.
2. Then the total resistance and the current.
3. Then the pd across each component (the pd is shared in proportion to resistance).
4. End with what the meter reads or what the circuit does.

Example. A thermistor and a fixed resistor are connected in series to a 6.0 V battery. A voltmeter is connected across the fixed resistor.

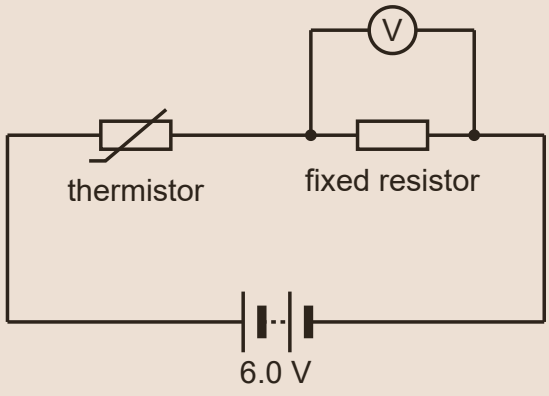

Explain what happens to the reading on the voltmeter when the temperature of the thermistor increases.

Model answer. The resistance of the thermistor decreases (1). The total resistance decreases, so the current in the circuit increases (1). The pd across the fixed resistor increases, because V = I R and its resistance does not change / the thermistor now takes a smaller share of the 6.0 V (1). So the voltmeter reading increases (1).

Don’t lose marks

- Using the gradient of a curved I–V graph as the resistance. Use R = V ÷ I at the point.
- Saying a thermistor's resistance increases with temperature (it decreases).
- Saying the lamp's resistance changes 'because the current changes' without mentioning the temperature of the filament.
- Drawing a diode graph with current flowing in both directions.
- Swapping the axes: on an I–V graph, current goes on the y-axis.

More tips

Memory tricks

- Both sensors go DOWN: more light (LDR) or more heat (thermistor) means less resistance.
- Lamp and thermistor are opposites: a hotter filament has MORE resistance, a hotter thermistor has LESS. Learn them as a pair.
- A diode is a one-way valve for current.
- Straight line through the origin = ohmic = constant resistance.

Exam technique

- In 'explain' questions link cause and effect with 'so': the current increases, so the filament gets hotter, so its resistance increases.
- When sketching, label the axes, draw through the origin and show both quadrants if negative values are asked for.
- For sensor circuits, go step by step: condition changes → resistance → current → pd across each component.

What each grade needs

What you need to be able to do, from the first marks up to the top grade.

Grade 3 — **Recall that an LDR's resistance falls in light**
The resistance of an LDR decreases as light intensity increases.

Grade 4 — **Recall that a thermistor's resistance falls when hot**
The resistance of a thermistor decreases as temperature increases.

Grade 5 — **Identify an ohmic conductor from its graph**
At constant temperature, current is directly proportional to pd, so the I–V graph is a straight line through the origin.

Grade 5 — **Describe how a diode controls current**
Current flows in one direction only; the diode has a very high resistance in the reverse direction.

Grade 5 — **Describe the I–V characteristics practical**
Vary the pd with a variable resistor, record V and I, then reverse the connections for negative values.

Grade 5 — **Find resistance at a point on an I–V graph**
Read V and I at that point and use R = V ÷ I, not the gradient.

Grade 6 — **Explain the filament lamp I–V graph**
The line curves because the filament gets hotter as the current increases, so its resistance increases.

Grade 7 — **Explain thermistor and LDR sensing circuits**
Link a change in temperature or light to a change in resistance, current and the pd across each component.

Free notes, Full packs, practice papers and mock exams at chhetriacademy.com. Written for this site; not taken from past papers. Stuck? 1-to-1 tutoring with a free 30-minute trial lesson.