Chhetri Academy

chhetriacademy.com

GCSE MATHS

Geometry and measures

Edexcel 1MA1 | Subtopic collection Topic 45

Plans and elevations

Higher tier

Past paper question booklet

14	2009-2024	Higher
question groups	available papers	tier

Before you begin

1. Show working and use units where appropriate.
2. Use extra paper if you need more space.
3. Print at actual size (100%) for measurement questions.

Name _____ **Date** _____

Whole questions are retained for context; some parts cover other points. Legacy sources are labelled.

9. Here are the plan and front elevation of a solid shape.

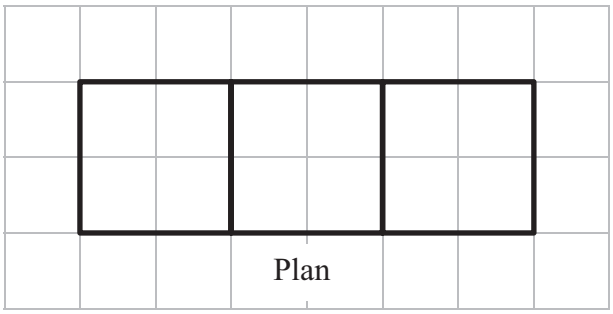

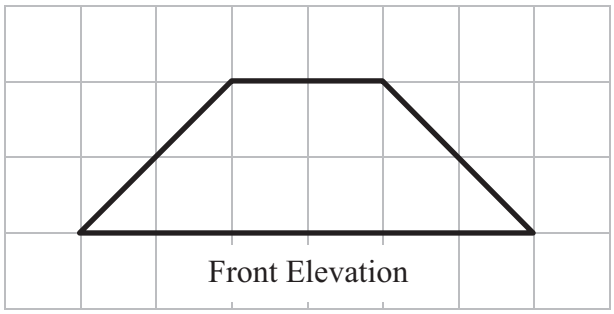

(a) On the grid below, draw the side elevation of the solid shape.

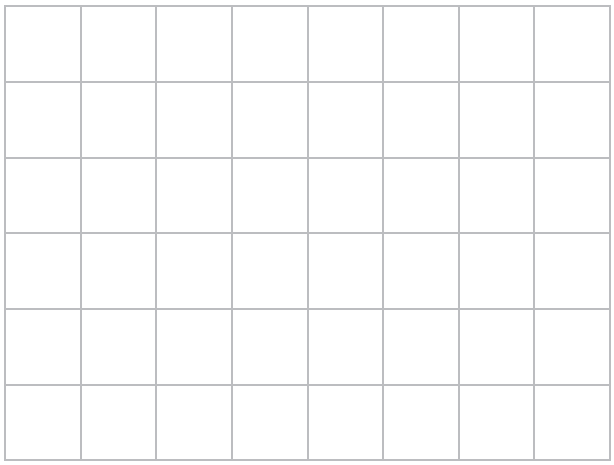

(2)

(b) In the space below, draw a sketch of the solid shape.

(2) **Q9**

(Total 4 marks)

5.

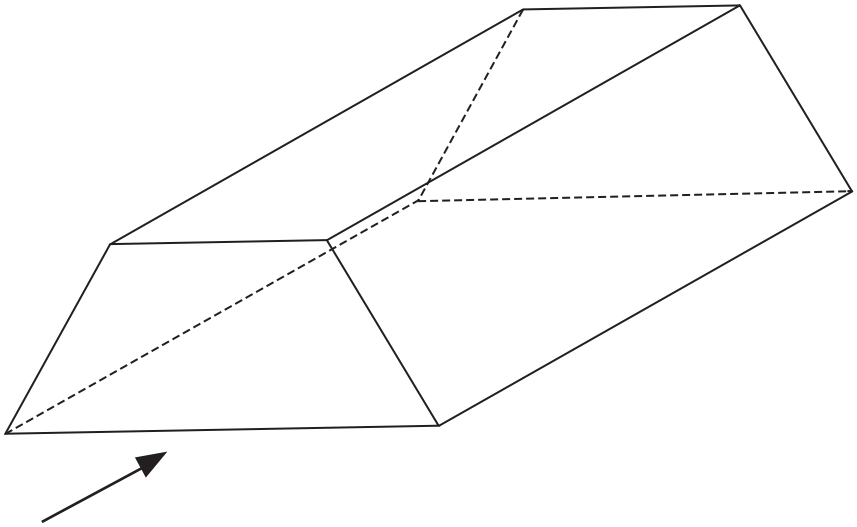

The diagram shows a prism.

(a) On the diagram, draw in **one** plane of symmetry for the prism.

(2)

(b) In the space below, sketch the front elevation from the direction marked with an arrow.

(2) **Q5**

(Total 4 marks)

13. The diagram shows a solid prism.

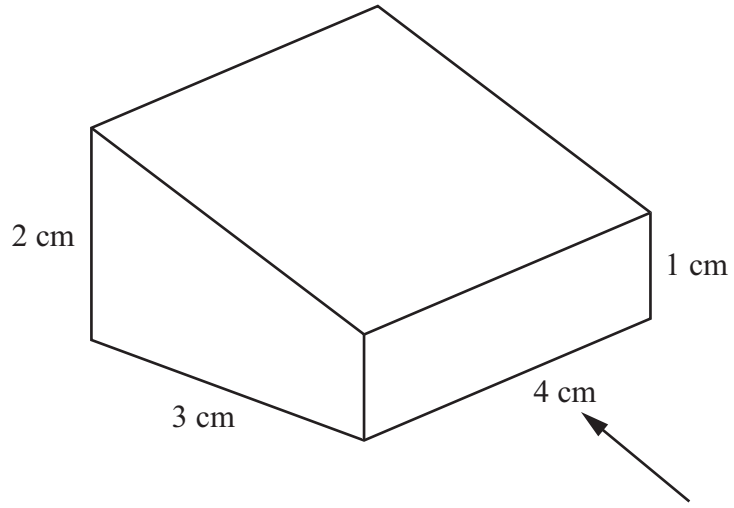

Diagram **NOT** accurately drawn

(a) On the grid below, draw the front elevation of the prism from the direction of the arrow.

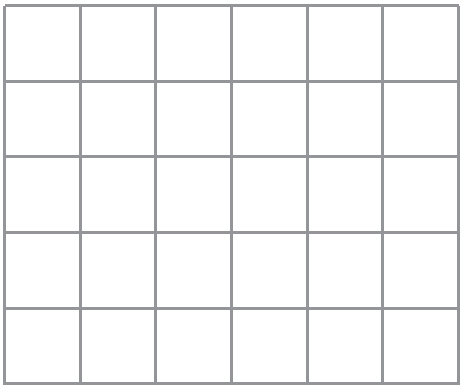

(2)

(b) On the grid below, draw the plan of the prism.

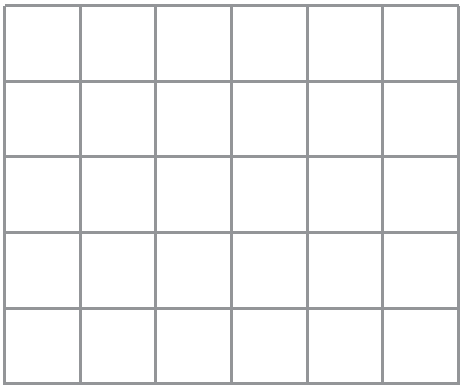

(2)

Q13

(Total 4 marks)

14. The diagram shows a solid prism made from centimetre cubes.

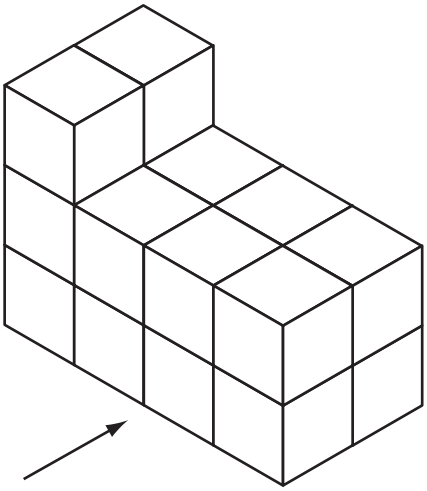

(a) On the centimetre square grid, draw the front elevation of the solid prism from the direction shown by the arrow.

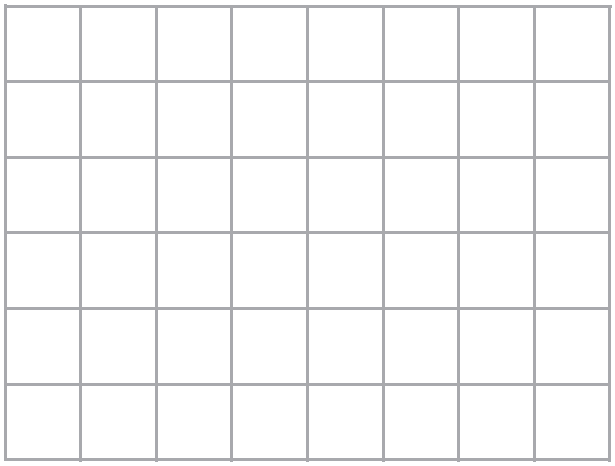

(2)

(b) On the centimetre square grid below, draw the plan of the solid prism.

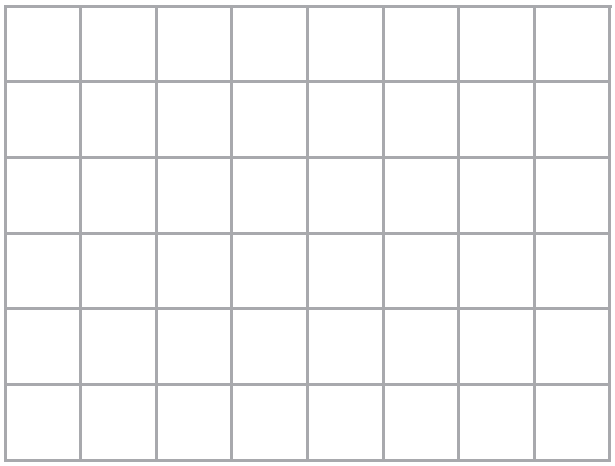

(2) **Q14**

(Total 4 marks)

9 The diagram shows the front elevation and the side elevation of a prism.

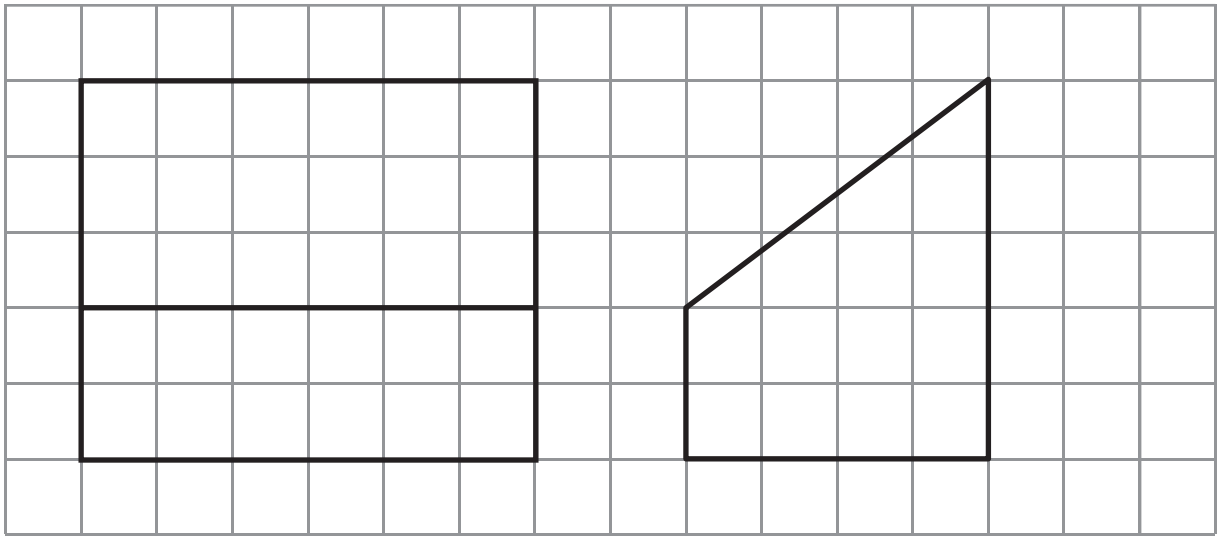

Front elevation

Side elevation

(a) On the grid, draw a plan of this prism.

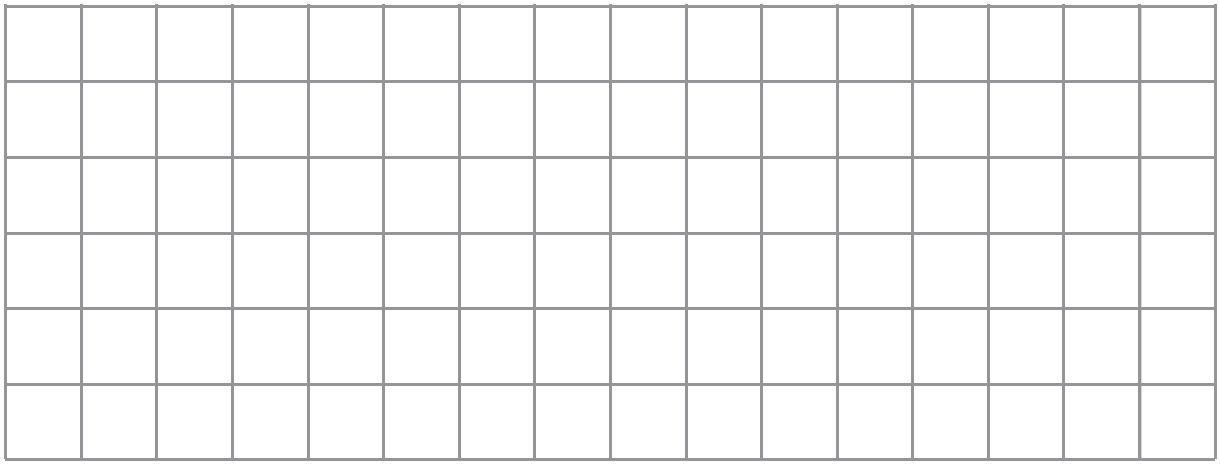

(2)

(b) In the space below, draw a sketch of this prism.

(2)

(Total for Question 9 is 4 marks)

10 Here is a solid prism.

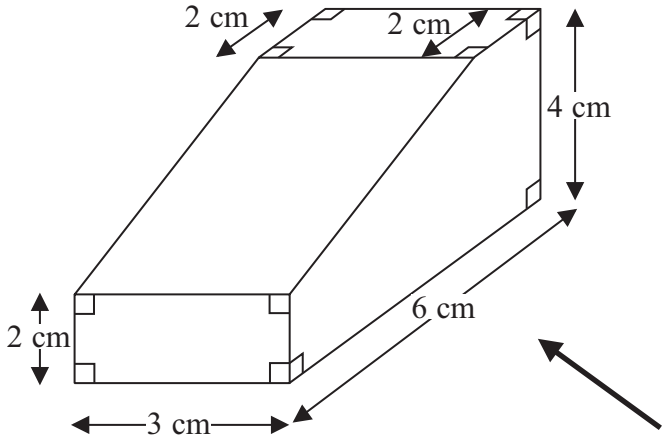

Diagram **NOT** accurately drawn

On the grid, draw an accurate side elevation of the solid prism from the direction of the arrow.

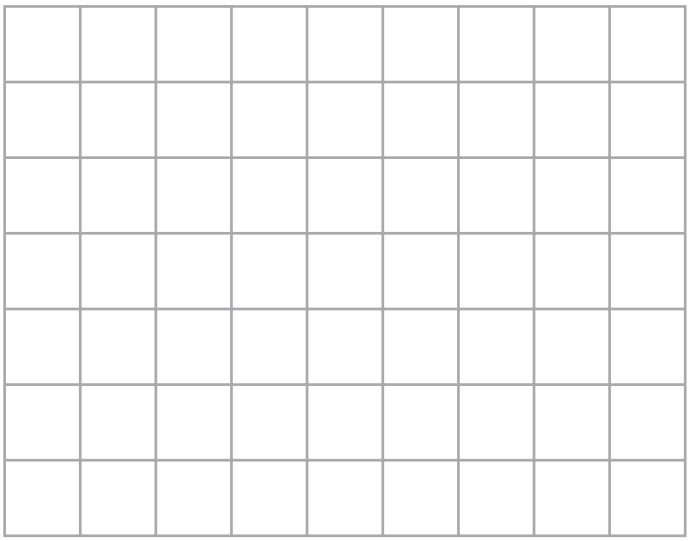

(Total for Question 10 is 2 marks)

4 The diagram shows a solid prism.

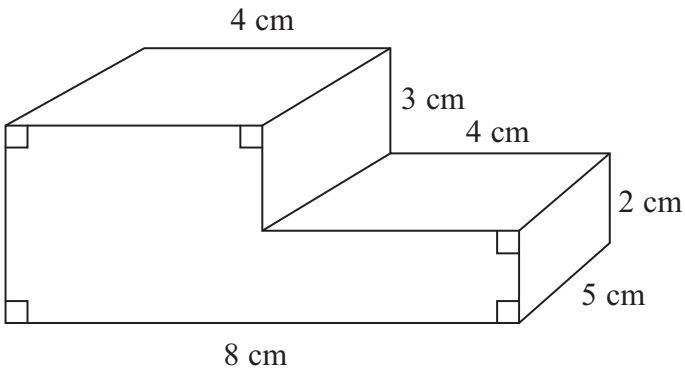

Diagram **NOT** accurately drawn

On the centimetre square grid, draw the side elevation of the solid prism from the direction shown by the arrow.

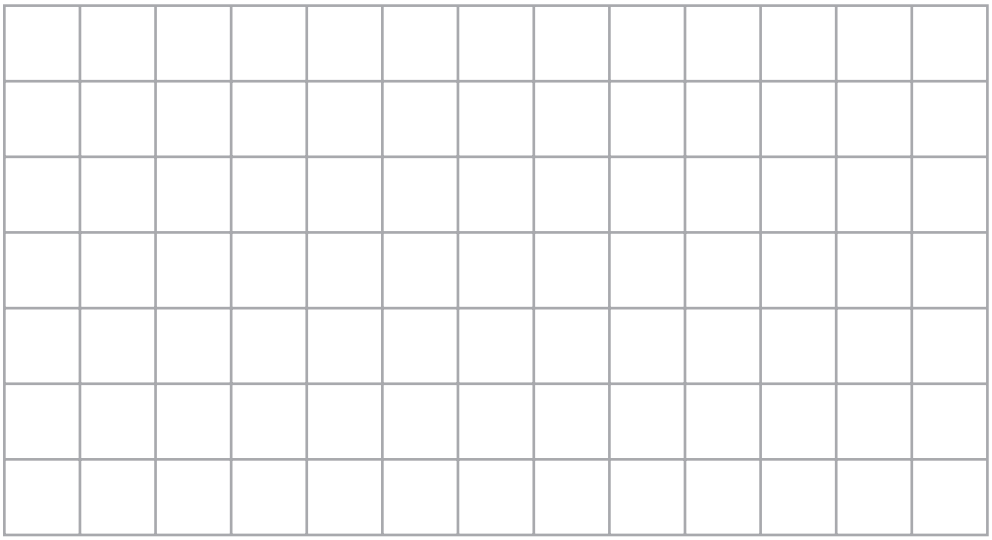

(Total for Question 4 is 2 marks)

5 Here are the front elevation and the plan of a prism.

Front elevation

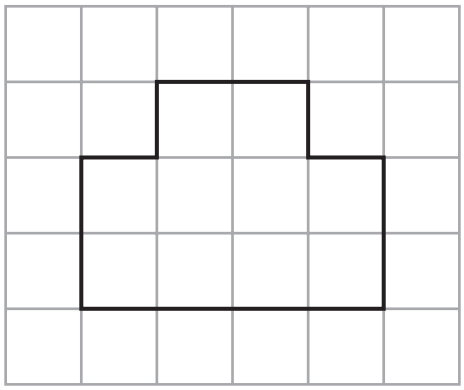

Plan

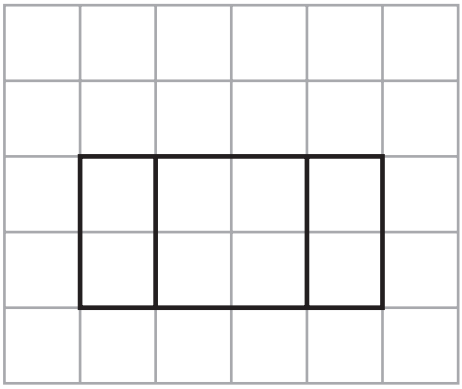

On the grid below, draw the side elevation of the prism.

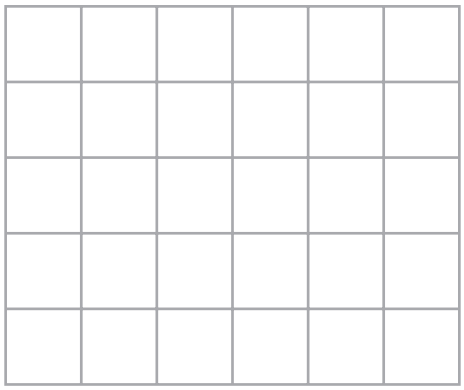

(Total for Question 5 is 2 marks)

4 The diagram shows a solid prism.

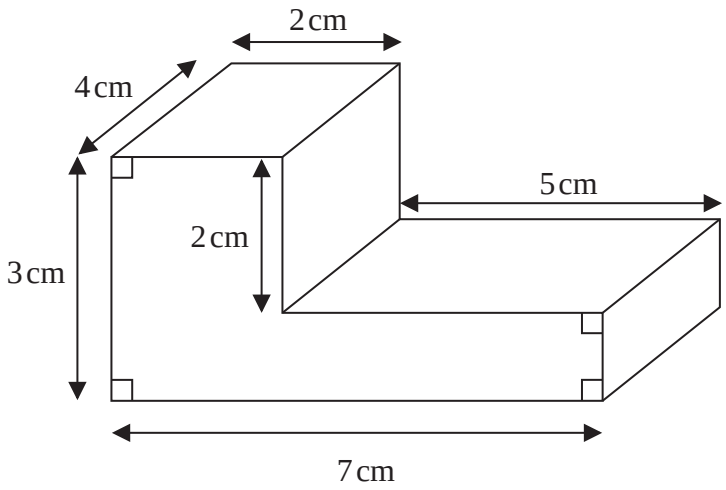

Diagram **NOT** accurately drawn

On the grid, draw an accurate plan of the solid prism.

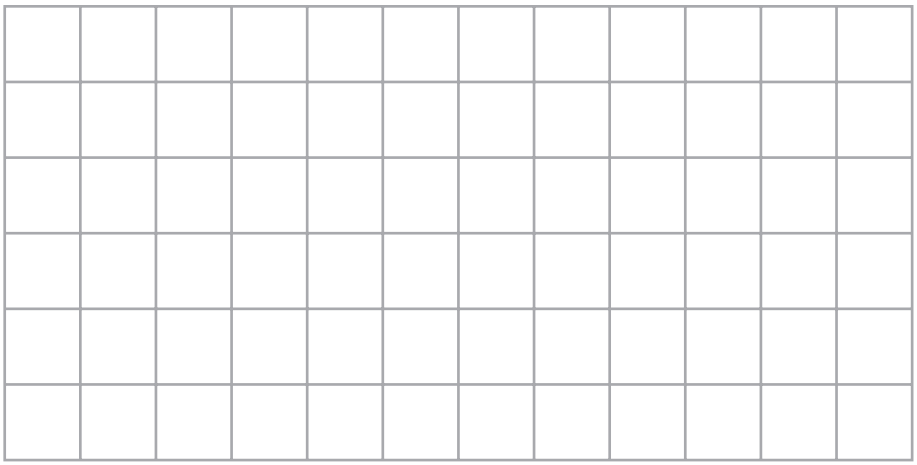

(Total for Question 4 is 2 marks)

3 The diagram shows a prism with a cross section in the shape of a trapezium.

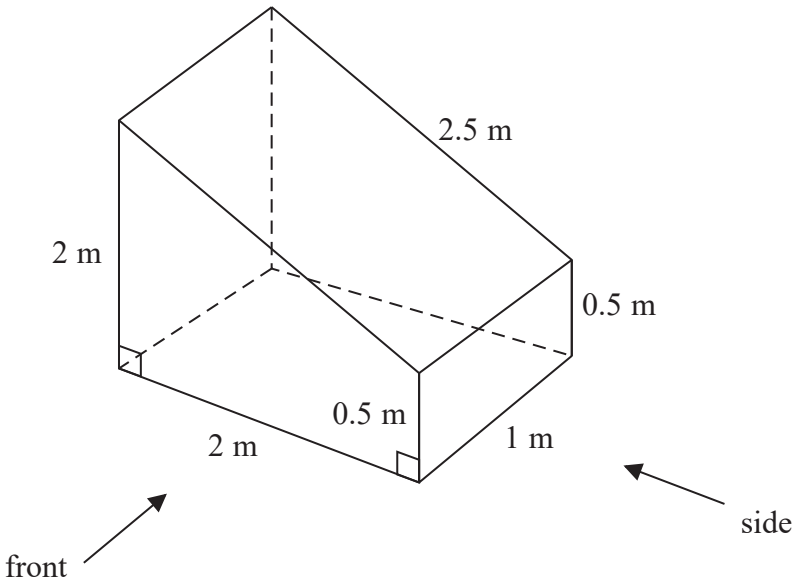

On the centimetre grid below, draw the front elevation and the side elevation of the prism.
Use a scale of 2 cm to 1 m.

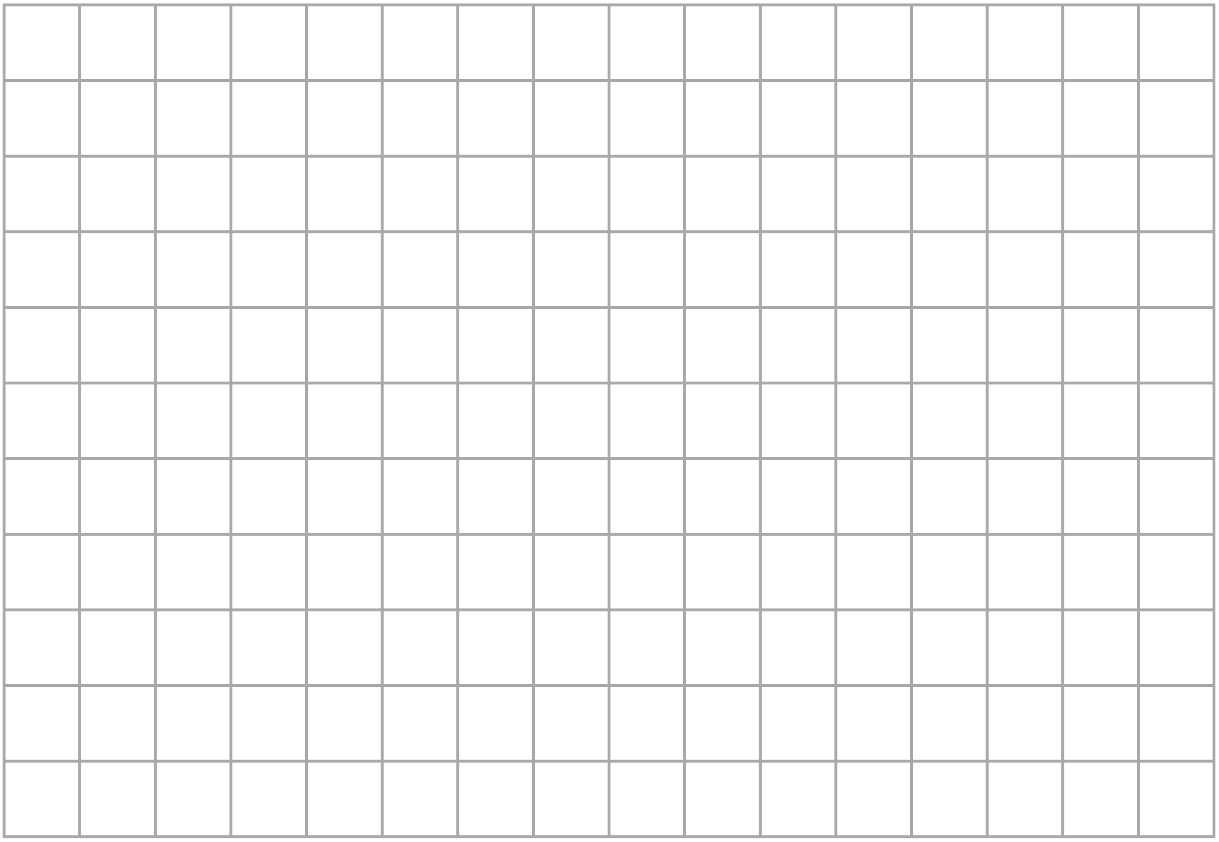

(Total for Question 3 is 4 marks)

5 Here is a solid square-based pyramid, *VABCD*.

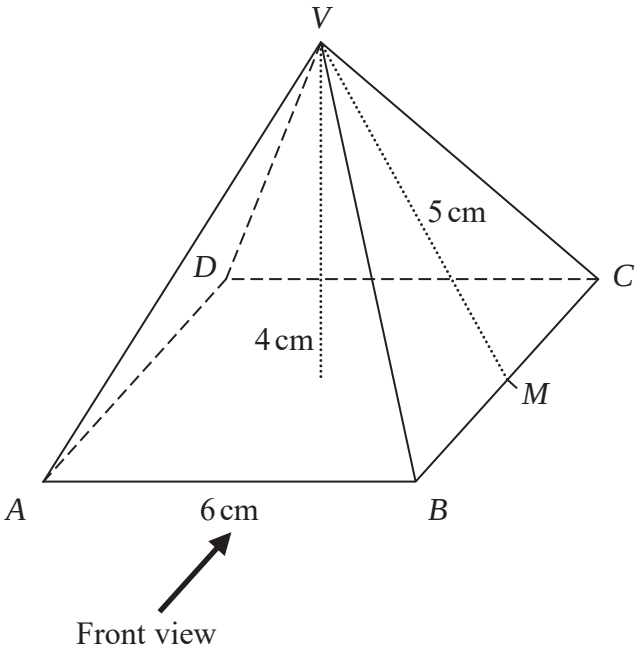

The base of the pyramid is a square of side 6 cm.
The height of the pyramid is 4 cm.
M is the midpoint of *BC* and *VM* = 5 cm.

(a) Draw an accurate front elevation of the pyramid from the direction of the arrow.

(2)

(b) Work out the total surface area of the pyramid.

.....

(4)

(Total for Question 5 is 6 marks)

4 The diagram shows the plan, front elevation and side elevation of a solid shape, drawn on a centimetre grid.

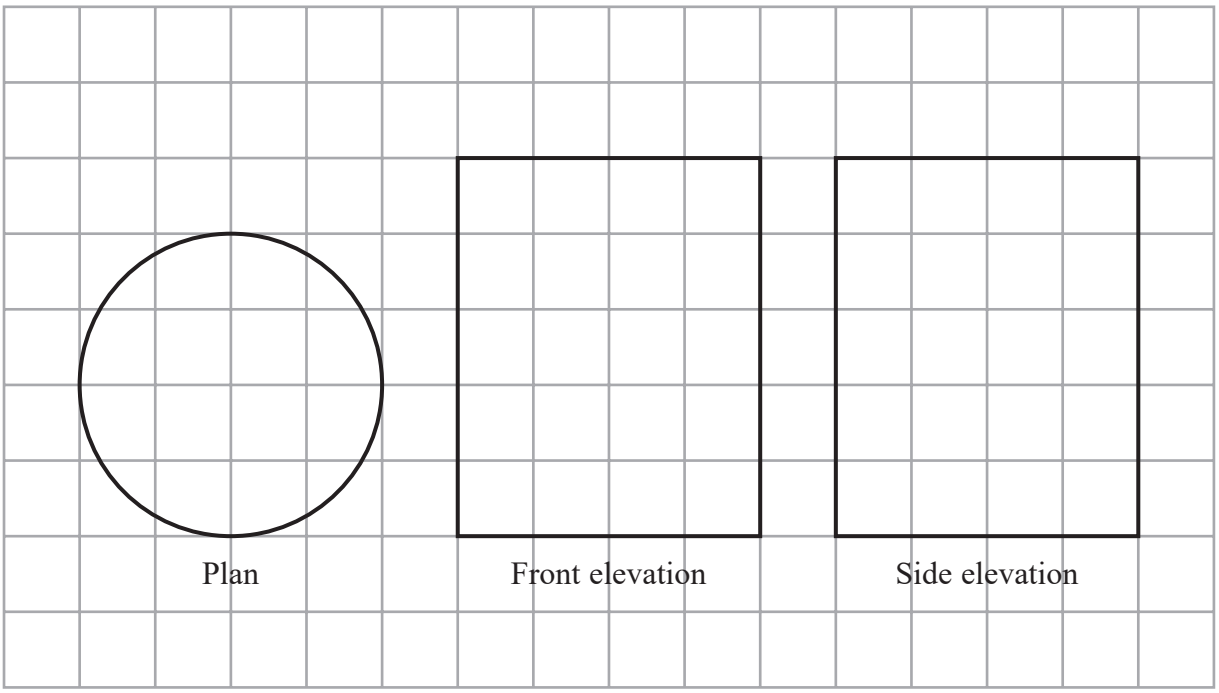

In the space below, draw a sketch of the solid shape.
Give the dimensions of the solid on your sketch.

(Total for Question 4 is 2 marks)

2 The front elevation and the plan of a solid are shown on the grid.

On the grid, draw the side elevation of the solid from the direction of the arrow.

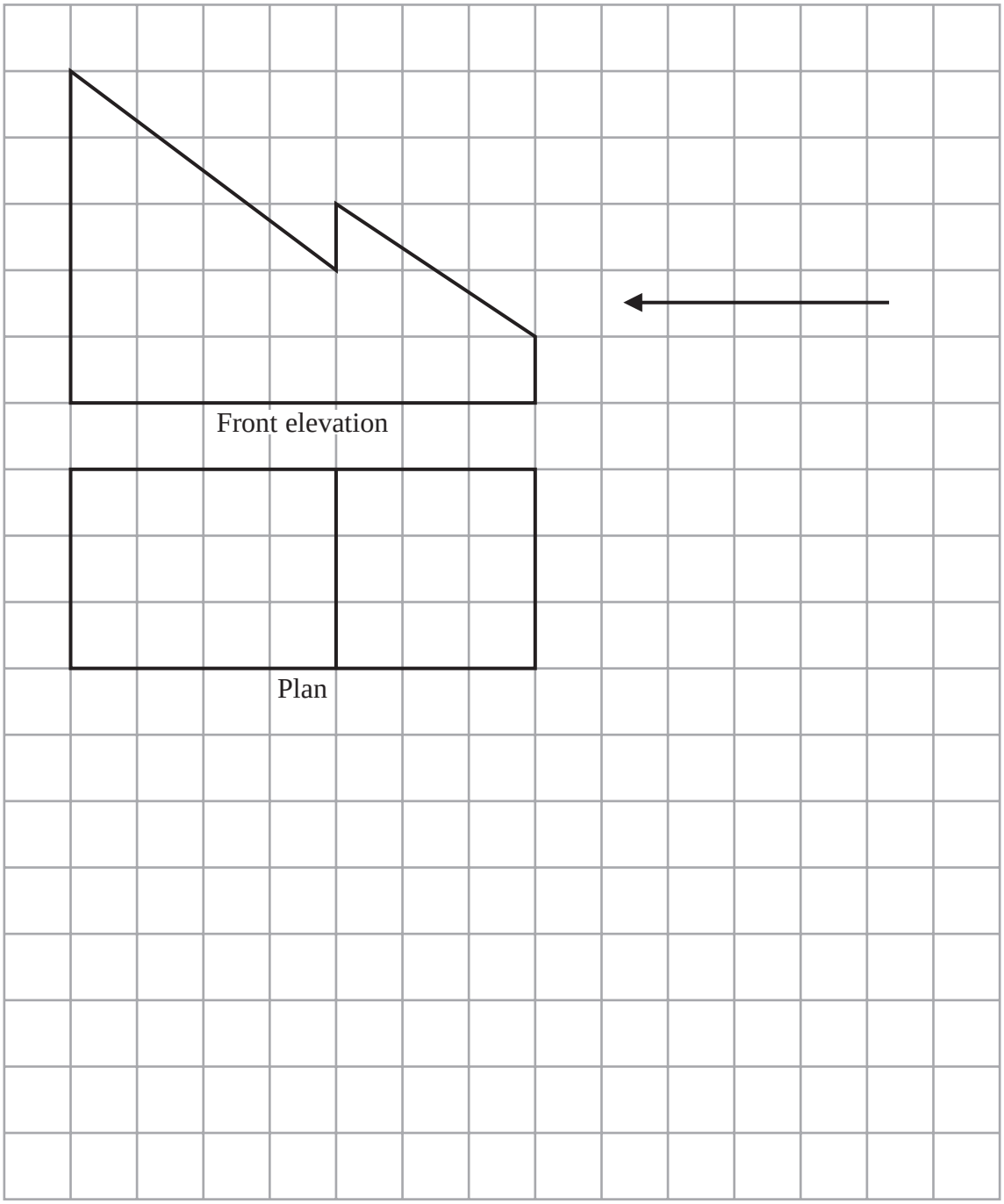

(Total for Question 2 is 2 marks)

3 The diagram shows a solid triangular prism.

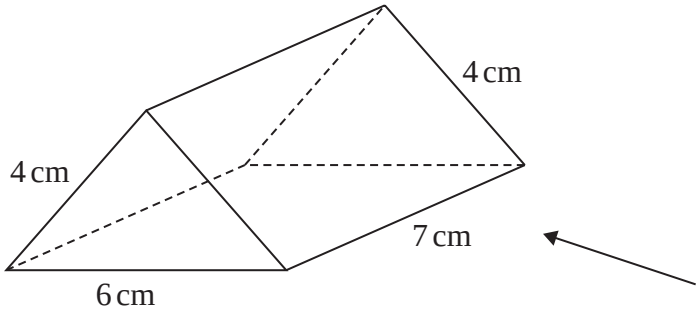

Rana is trying to draw the side elevation of the solid prism from the direction of the arrow.

Here is her answer on a centimetre grid.

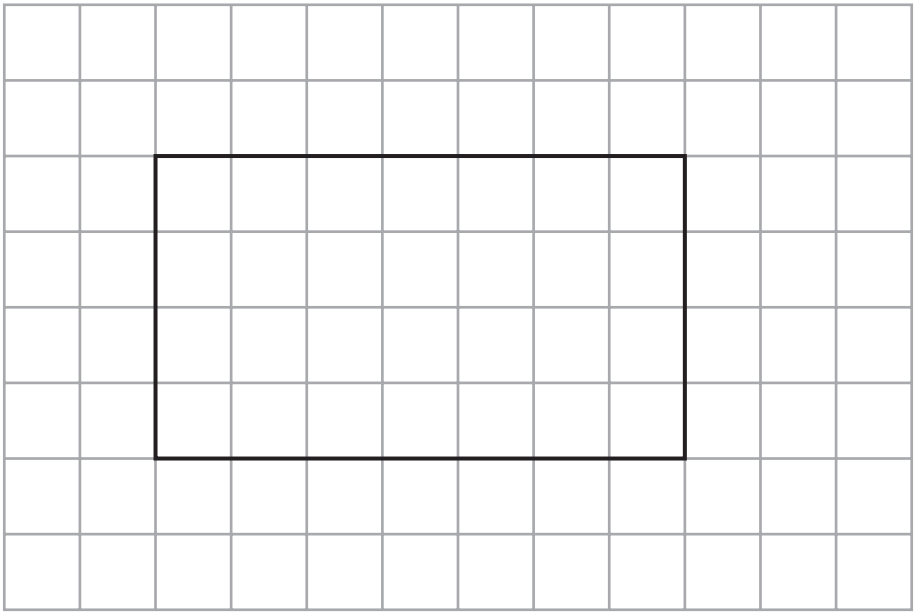

(a) Explain why Rana's side elevation is not correct.

.....

.....

.....

(1)

(b) On the centimetre grid below, draw a plan of the solid prism.

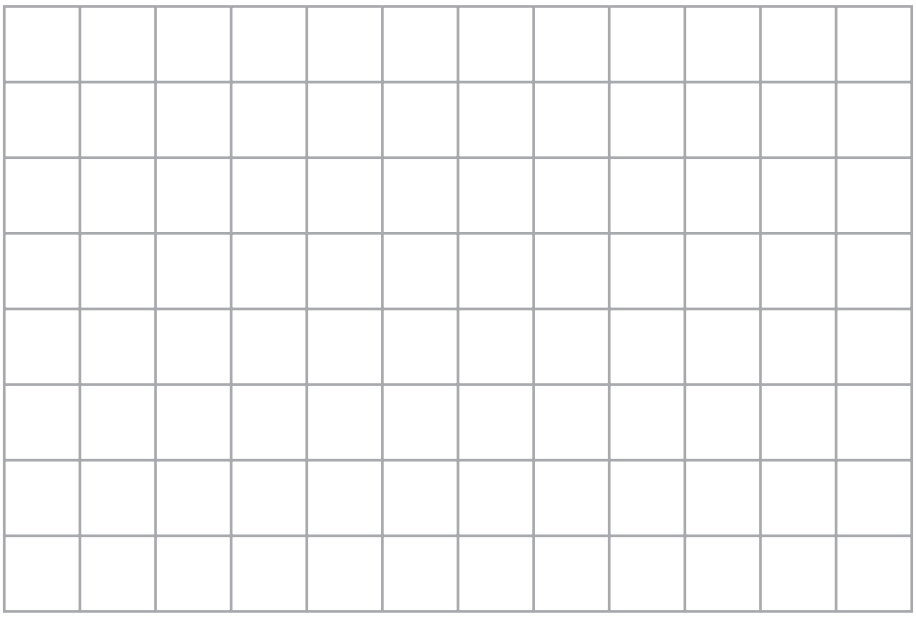

(2)

(Total for Question 3 is 3 marks)