Chhetri Academy

chhetriacademy.com

GCSE MATHS

Geometry and measures

Edexcel 1MA1 | Subtopic collection Topic 44

Volume and surface area

Higher tier

Past paper question booklet

149	2003-2025	Higher
question groups	available papers	tier

Before you begin

1. Show working and use units where appropriate.
2. Use extra paper if you need more space.
3. Print at actual size (100%) for measurement questions.

Name _____ **Date** _____

Whole questions are retained for context; some parts cover other points. Legacy sources are labelled.

8. This table shows some expressions.

The letters x, y and z represent lengths.

Place a tick in the appropriate column for each expression to show whether the expression can be used to represent a length, an area, a volume or none of these.

Expression	Length	Area	Volume	None of these
$x + y + z$				
xyz				
$xy + yz + xz$				

(3)

Page Total

1.

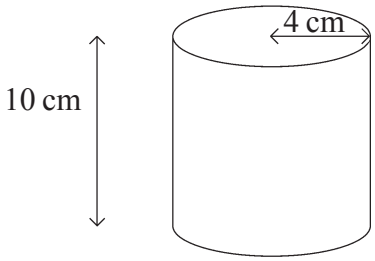

Diagram **NOT** accurately drawn

The diagram shows a cylinder with a height of 10 cm and a radius of 4 cm.

(a) Calculate the volume of the cylinder.
Give your answer correct to 3 significant figures.

.....cm^3
(2)

The length of a pencil is 13 cm.
The pencil cannot be broken.

(b) Show that this pencil cannot fit inside the cylinder.

(3)

4.

Leave blank

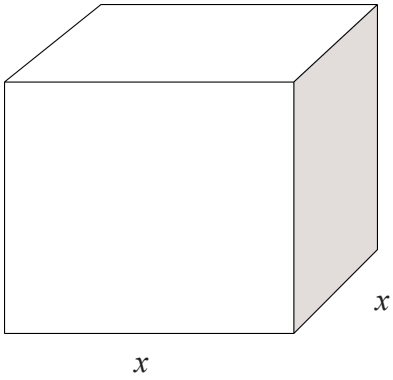

A cuboid has a square base of side x cm.
The height of the cuboid is 1 cm more than the length x cm.
The volume of the cuboid is 230 cm^3.

(a) Show that $x^3 + x^2 = 230$

(2)

The equation $x^3 + x^2 = 230$

has a solution between $x = 5$ and $x = 6$.

(b) Use a trial and improvement method to find this solution.
Give your answer correct to 1 decimal place.
You must show **all** your working.

$x =$ .....

(4)

Page Total

12.

Leave blank

Diagram **NOT** accurately drawn

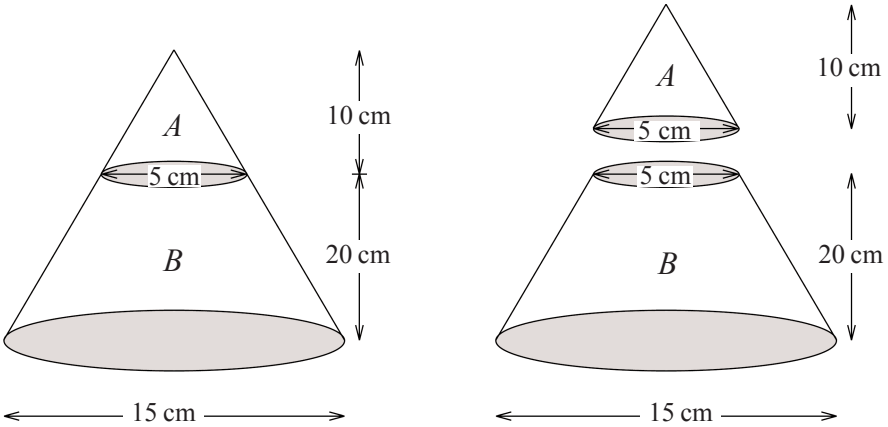

The diagram represents a large cone of height 30 cm and base diameter 15 cm.

The large cone is made by placing a small cone A of height 10 cm and base diameter 5 cm on top of a frustum B.

(a) Calculate the volume of the frustum B.
Give your answer correct to 3 significant figures.

.....cm^3
(3)

Diagram **NOT** accurately drawn

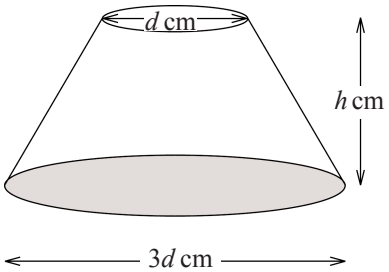

The diagram shows a frustum.
The diameter of the base is $3d$ cm and the diameter of the top is d cm.
The height of the frustum is h cm.

The formula for the curved surface area, S cm^2, of the frustum is

$$S = 2\pi d\sqrt{h^2 + d^2}$$

Leave blank

(b) Rearrange the formula to make h the subject.

$h =$ .....

(3)

Two mathematically similar frustums have heights of 20 cm and 30 cm.

The surface area of the smaller frustum is 450 cm^2.

(c) Calculate the surface area of the larger frustum.

.....cm^2

(2)

Page Total

16.

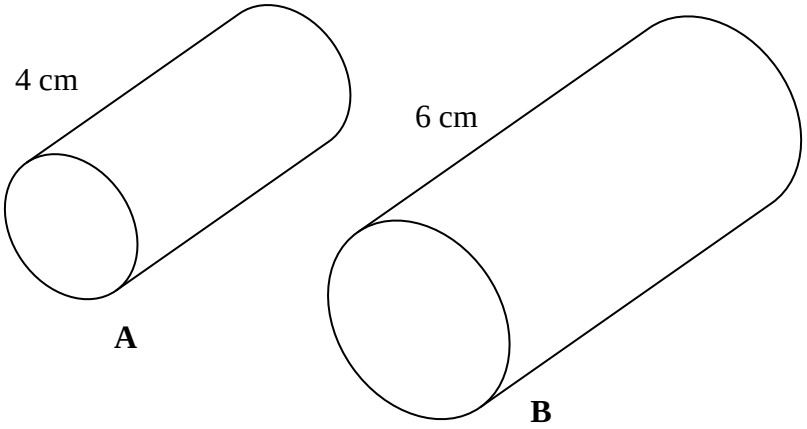

Diagram **NOT** accurately drawn

Cylinder **A** and cylinder **B** are mathematically similar.
The length of cylinder **A** is 4 cm and the length of cylinder **B** is 6 cm.
The volume of cylinder **A** is 80 cm^3.

Calculate the volume of cylinder **B**.

..... cm^3
(3)

18.

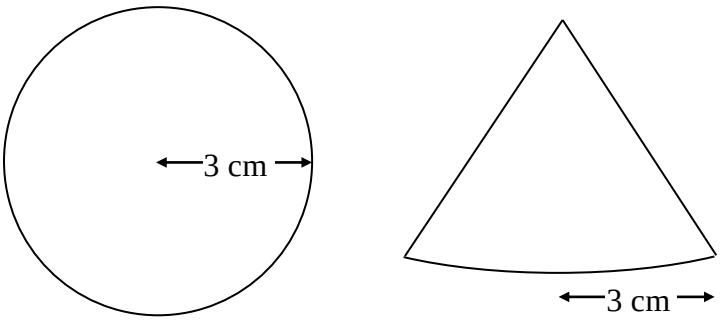

Diagram **NOT** accurately drawn

The radius of a sphere is 3 cm.
The radius of the base of a cone is also 3 cm.
The volume of the sphere is 3 times the volume of the cone.

Work out the curved surface area of the cone.
Give your answer as a multiple of π.

..... cm^2
(7)

2. A can of drink is in the shape of a cylinder.
The can has a radius of 4 cm and a height of 15 cm.

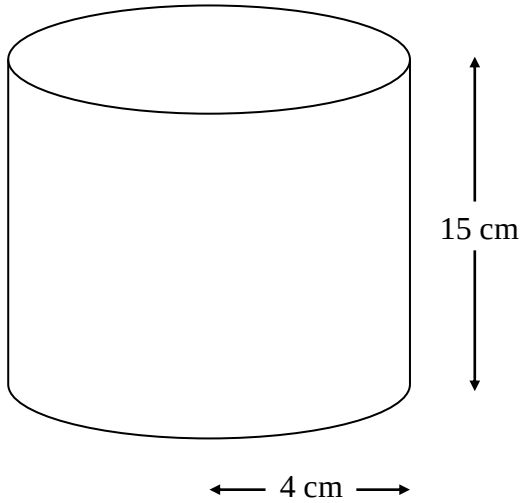

Diagram **NOT** accurately drawn

Calculate the volume of the cylinder.
Give your answer correct to 3 significant figures.

.....

(3)

6. The diagram shows a wedge in the shape of a triangular prism.

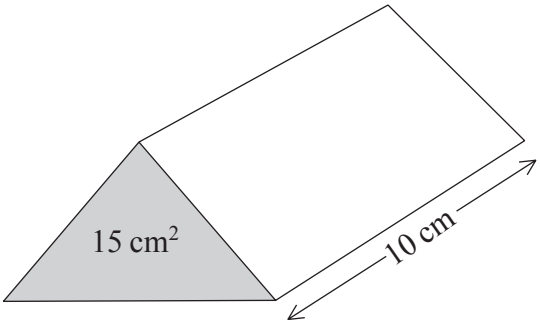

Diagram **NOT** accurately drawn

The cross section of the prism is shown as a shaded triangle.

The area of the triangle is 15 cm^2.
The length of the prism is 10 cm.

Work out the volume of the prism.

.....

(3)

Page Total

19. The diagram shows a pyramid. The apex of the pyramid is V.
Each of the sloping edges is of length 6 cm.

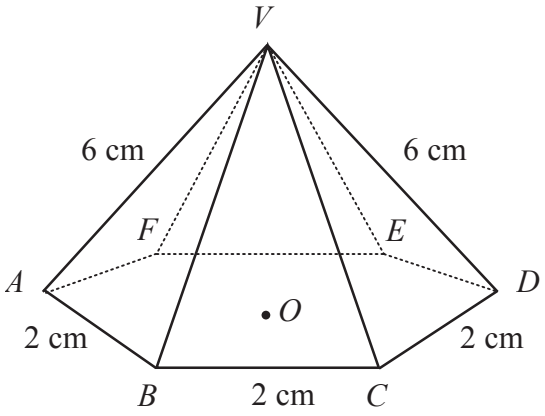

Diagram **NOT** accurately drawn

The base of the pyramid is a regular hexagon with sides of length 2 cm.
O is the centre of the base.

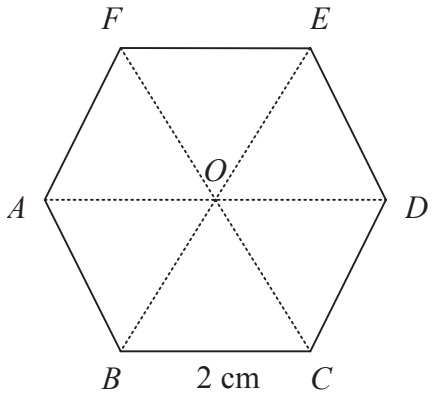

Diagram **NOT** accurately drawn

(a) Calculate the height of V above the base of the pyramid.
Give your answer correct to 3 significant figures.

..... cm
(2)

blank

(b) Calculate the size of angle DVA.
Give your answer correct to 3 significant figures.

..... °
(3)

(c) Calculate the size of angle AVC.
Give your answer correct to 3 significant figures.

..... °
(4)

(Total 9 marks)

Q19

3. The density of concrete is 2.3 grams per cm^3.

(a) Work out the mass of a piece of concrete with a volume of 20 cm^3.

..... grams
(2)

480 grams of a cheese has a volume of 400 cm^3.

(b) Work out the density of the cheese.

..... grams per cm^3
(2)

(Total 4 marks)

Q3

9. The table shows some expressions.

Expression	Length	Area	Volume	None of these
πab				
$a + 2b$				
$\pi a^2 + b$				

The letters a and b represent lengths.
π and 2 are numbers that have no dimensions.

Place a tick (✓) in the correct column to show whether the expression can be used to represent a length, an area, a volume or none of these.

Q9

(Total 3 marks)

4.

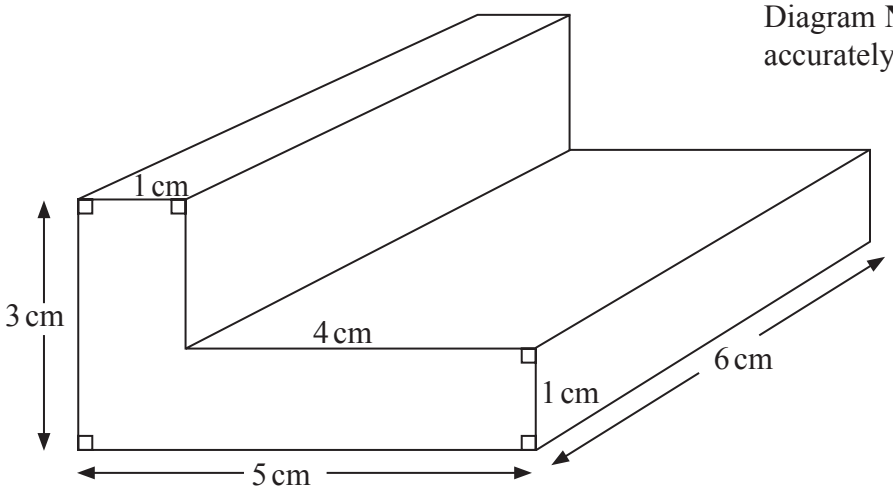

Work out the total surface area of the L-shaped prism.
State the units with your answer.

Q4

.....

(Total 4 marks)

20.

Diagrams **NOT** accurately drawn

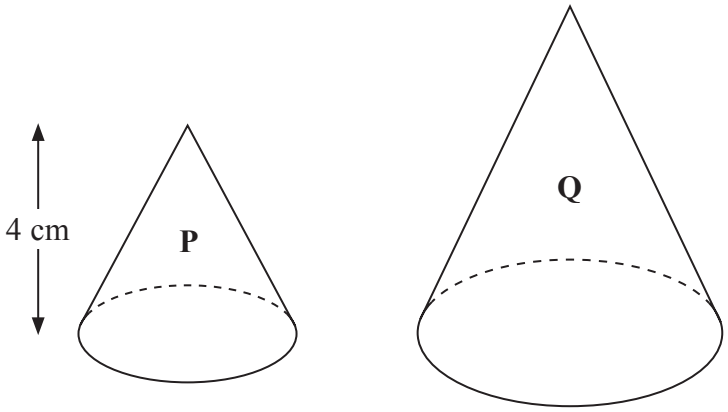

Two cones, **P** and **Q**, are mathematically similar.
The total surface area of cone **P** is 24 cm^2.
The total surface area of cone **Q** is 96 cm^2.
The height of cone **P** is 4 cm.

(a) Work out the height of cone **Q**.

..... cm
(3)

The volume of cone **P** is 12 cm^3.

(b) Work out the volume of cone **Q**.

..... cm^3
(2)

Q20

(Total 5 marks)

23. The diagram shows a cylinder and a sphere.

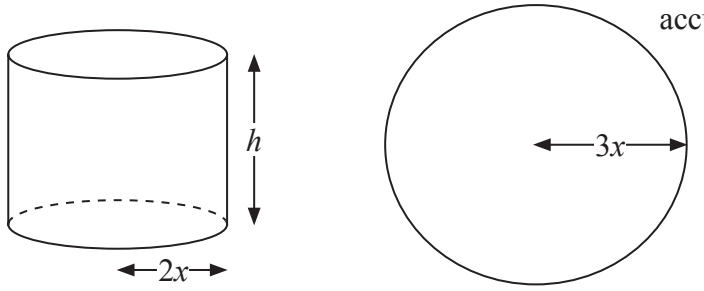

Diagram **NOT** accurately drawn

The radius of the base of the cylinder is $2x$ cm and the height of the cylinder is h cm.
The radius of the sphere is $3x$ cm.
The volume of the cylinder is equal to the volume of the sphere.

Express h in terms of x.
Give your answer in its simplest form.

$h =$ .....

(Total 3 marks)

Q23

Blank

15. A cuboid has length 3 cm, width 4 cm and height 12 cm.

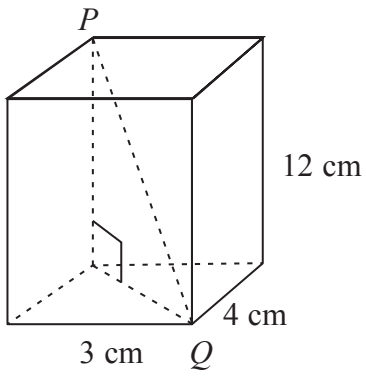

Diagram **NOT** accurately drawn

Work out the length of PQ.

..... cm

(Total 3 marks)

Q15

21. The volumes of two mathematically similar solids are in the ratio 27 : 125

The surface area of the smaller solid is 36 cm^2.

Work out the surface area of the larger solid.

..... cm^2

(Total 3 marks)

Q21

9. (a) A solid cube has sides of length 5 cm.

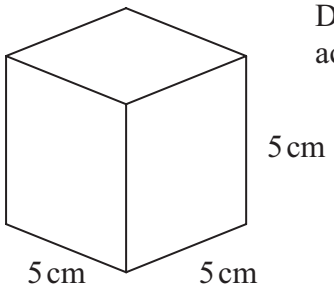

Diagram **NOT** accurately drawn

Work out the total surface area of the cube.
State the units of your answer.

.....
(4)

The volume of the cube is 125 cm^3.

(b) Change 125 cm^3 into mm^3.

..... mm^3
(2)

The weight of the cube is 87 grams, correct to the nearest gram.

(c) (i) What is the minimum the weight could be?

..... grams

(ii) What is the maximum the weight could be?

..... grams
(2)

(Total 8 marks)

Q9

Blank

9.

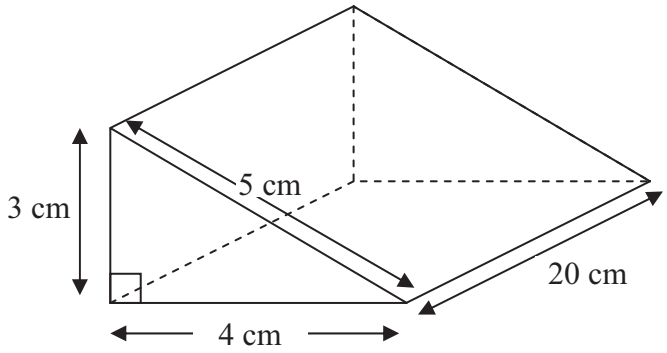

Diagram **NOT** accurately drawn

Work out the volume of the triangular prism.

..... cm^3

Q9

(Total 2 marks)

20. (a) Here are some expressions.

a^3b	$a^2(c + b)$	$4abc$	$ab + c^3$	$4\pi c^2$

The letters a, b, and c represent lengths.
π and 4 are numbers that have no dimension.

Two of the expressions could represent volumes.
Tick the boxes (✓) underneath these two expressions.

(2)

The volume of this cube is 8 m^3.

(b) Change 8 m^3 into cm^3.

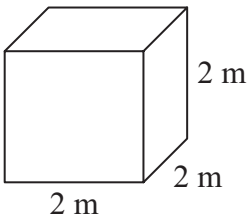

Diagram **NOT** accurately drawn

..... cm^3

(2)

Q20

(Total 4 marks)

Blank

23. **A** and **B** are two solid shapes which are mathematically similar.
The shapes are made from the same material.

A

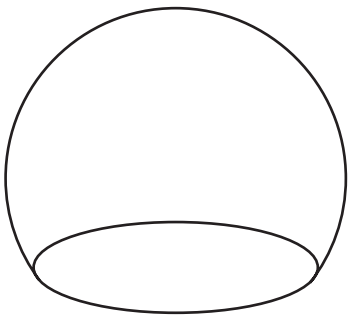

B

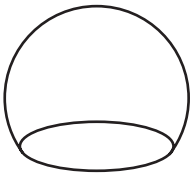

Diagram **NOT** accurately drawn

The surface area of **A** is 50 cm^2.
The surface area of **B** is 18 cm^2.

The mass of **A** is 500 grams.

Calculate the mass of **B**.

..... grams

Q23

(Total 4 marks)

15. Here are 5 diagrams.

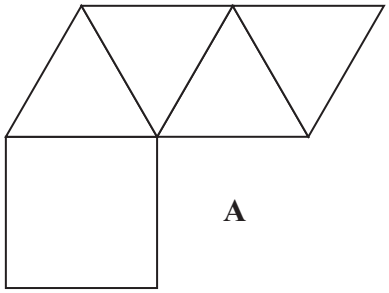

A

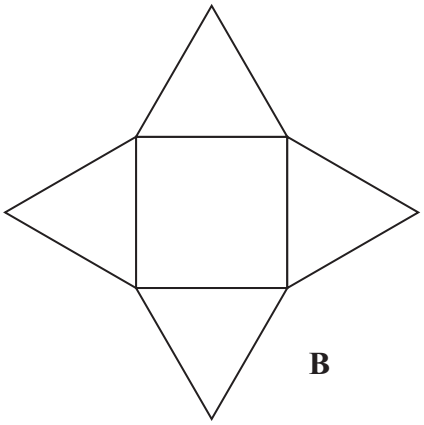

B

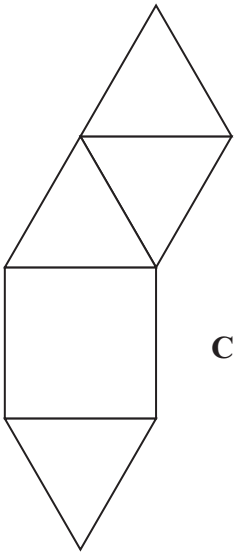

C

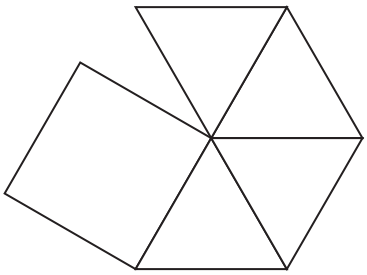

D

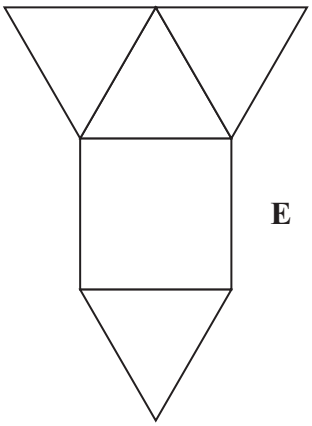

E

Two of these diagrams show a net for a square-based pyramid.

Write down the letter of each of these two diagrams.

..... and .....

(Total 2 marks)

Q15

16. G and H are vertices of a cuboid.

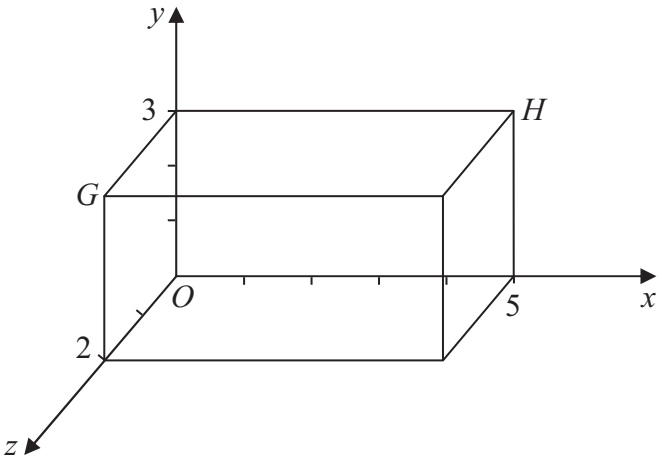

Diagram **NOT** accurately drawn

(a) Write down the coordinates of point G.

(..... , ... , ...)

(1)

(b) Write down the coordinates of point H.

(..... , ... , ...)

(1)

Q16

(Total 2 marks)

5

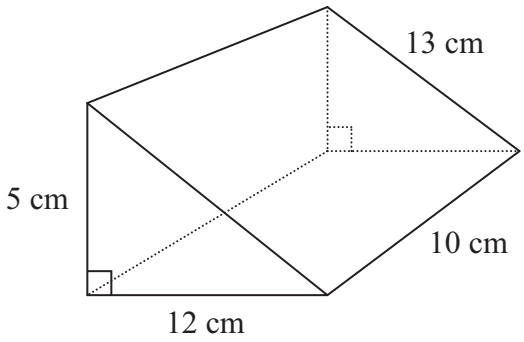

Diagram **NOT** accurately drawn.

Work out the total surface area of this triangular prism.

.....

(Total for Question 5 is 4 marks)

15

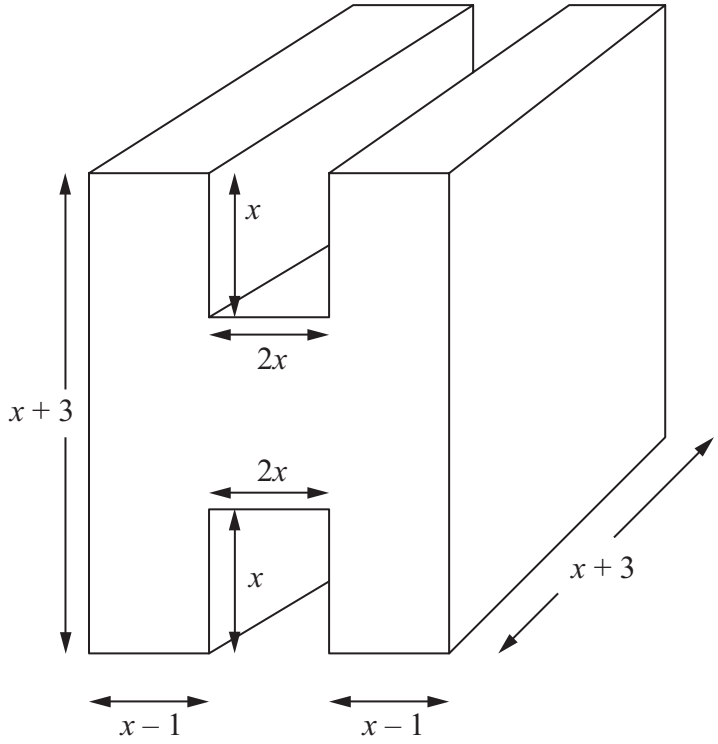

Diagram **NOT** accurately drawn.

The diagram shows a prism.
All measurements are in cm.
All corners are right angles.
The volume of the prism is V cm^3.

Find a formula for V.

$V =$ .....

(Total for Question 15 is 4 marks)

10.

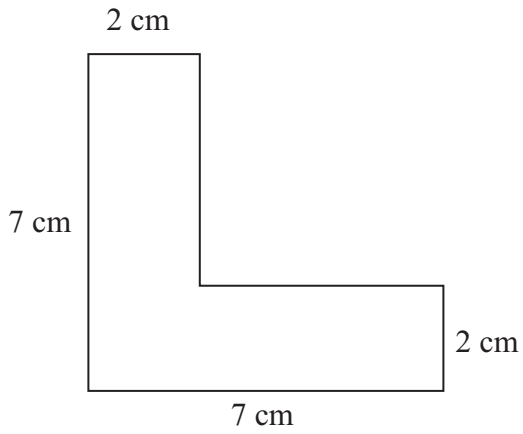

Diagram **NOT** accurately drawn

The diagram shows the cross-section of a solid prism.
The length of the prism is 2 m.

The prism is made from metal.
The density of the metal is 8 grams per cm^3.

Work out the mass of the prism.

.....

(Total 5 marks)

Q10

25.

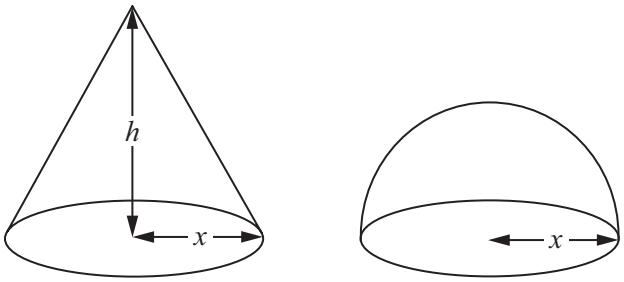

Diagram **NOT** accurately drawn

The diagram shows a solid cone and a solid hemisphere.

The cone has a base of radius x cm and a height of h cm.
The hemisphere has a base of radius x cm.
The surface area of the cone is equal to the surface area of the hemisphere.

Find an expression for h in terms of x.

.....

Q25

(Total 4 marks)

9.

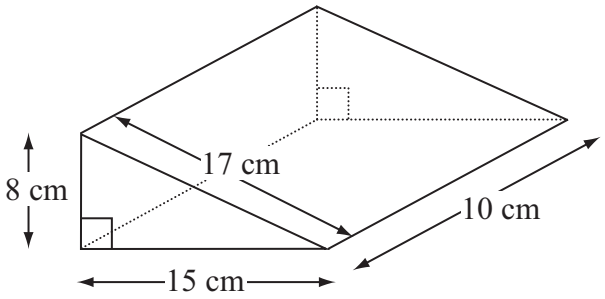

Diagram **NOT** accurately drawn

Work out the **total** surface area of the triangular prism.

.....

(Total 4 marks)

Q9

19. The surface area of Earth is 510 072 000 km^2.
The surface area of Jupiter is 6.21795×10^{10} km^2.

The surface area of Jupiter is greater than the surface area of Earth.
How many times greater?
Give your answer in standard form.

.....

Q19

(Total 3 marks)

16.

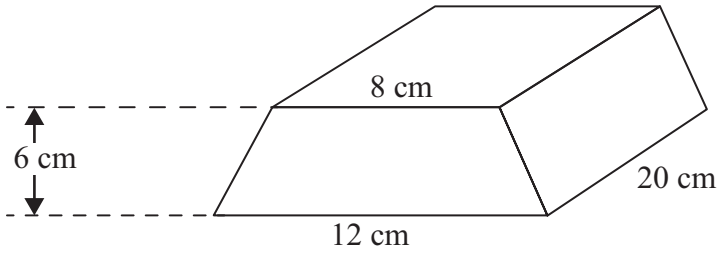

Diagram **NOT** accurately drawn

The diagram shows a solid prism made from metal.
The cross-section of the prism is a trapezium.

The parallel sides of the trapezium are 8 cm and 12 cm.
The height of the trapezium is 6 cm.
The length of the prism is 20 cm.

The density of the metal is 5 g/cm^3.

Calculate the mass of the prism.
Give your answer in kilograms.

..... kg

Q16

(Total 5 marks)

24. The diagram shows a solid hemisphere of radius 8 cm.

Diagram **NOT** accurately drawn

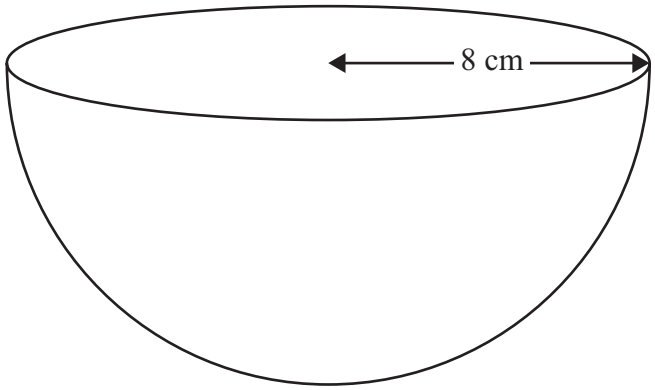

Work out the total surface area of the hemisphere.
Give your answer correct to 3 significant figures.

..... cm^2 **Q24**

(Total 3 marks)

7 This diagram, drawn on a centimetre grid, is an accurate net of a triangular prism.

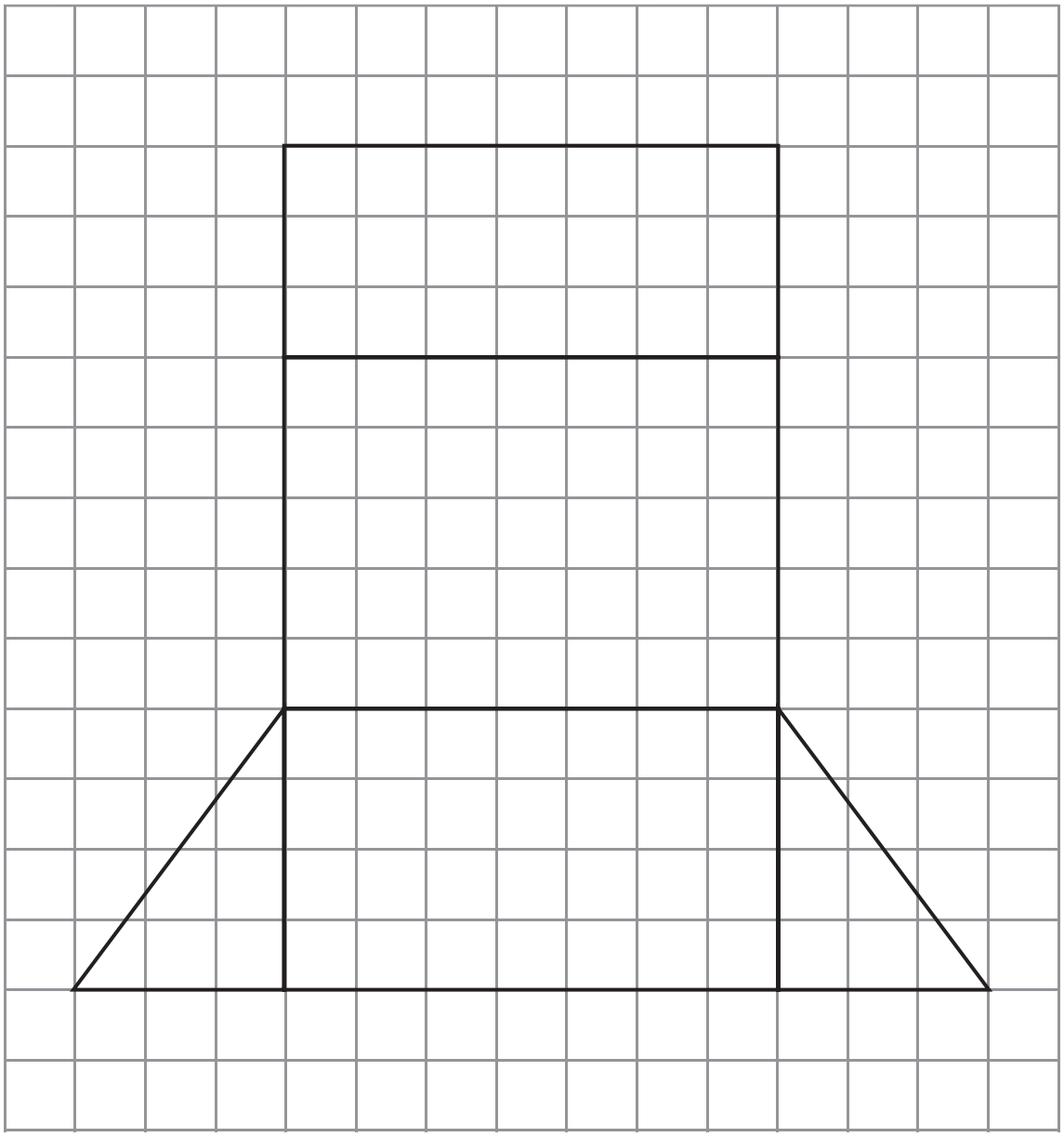

Work out the volume of the prism.

.....

(Total for Question 7 is 4 marks)

***4** Marc drives a truck.
The truck pulls a container.
The container is a cuboid 10 m by 4 m by 5 m.



Diagram **NOT** accurately drawn

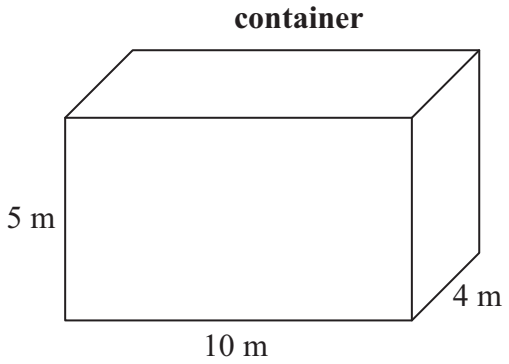

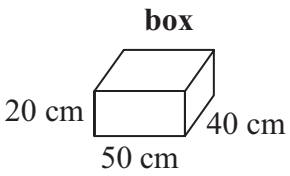

Marc fills the container with boxes.
Each box is a cuboid 50 cm by 40 cm by 20 cm.

Show that Marc can put no more than 5000 boxes into the container.

(Total for Question 4 is 4 marks)

12 Jane has a carton of orange juice.
The carton is in the shape of a cuboid.

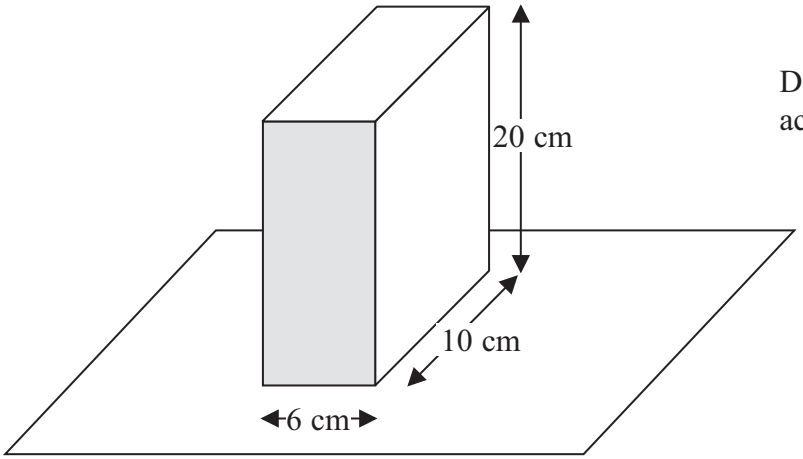

Diagram **NOT** accurately drawn

The depth of the orange juice in the carton is 8 cm.

Jane closes the carton.
Then she turns the carton over so that it stands on the shaded face.

Work out the depth, in cm, of the orange juice now.

..... cm

(Total for Question 12 is 3 marks)

8 The diagram shows a triangular prism.

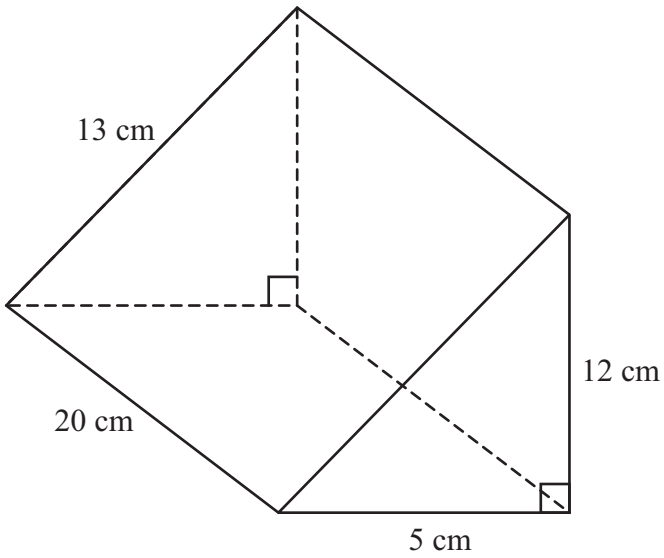

Diagram **NOT** accurately drawn

Work out the total surface area of the prism.

..... cm^2

(Total for Question 8 is 3 marks)

17 Ali has two solid cones made from the same type of metal.

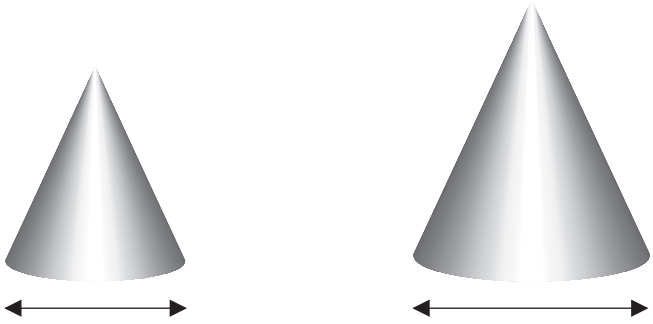

A **B**

Diagram **NOT** accurately drawn

The two solid cones are mathematically similar.
The base of cone **A** is a circle with diameter 80 cm.
The base of cone **B** is a circle with diameter 160 cm.

Ali uses 80 m*l* of paint to paint cone **A**.
Ali is going to paint cone **B**.

(a) Work out how much paint, in m*l*, he will need.

..... m*l*
(2)

The volume of cone **A** is 171 700 cm^3.

(b) Work out the volume of cone **B**.

..... cm^3
(3)

(Total for Question 17 is 5 marks)

9 The diagram shows a prism.

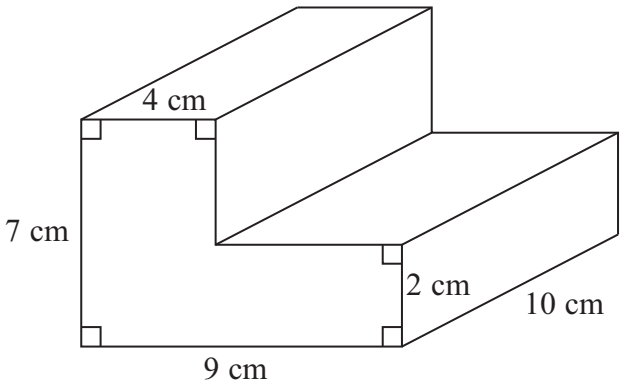

Diagram **NOT** accurately drawn

Work out the volume of the prism.

.....cm^3

(Total for Question 9 is 3 marks)

25 The diagram shows two similar solids, A and B.

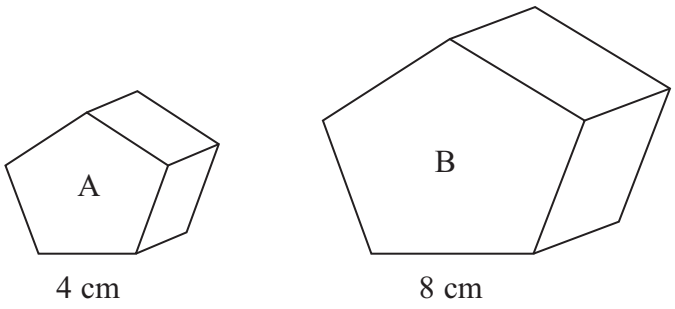

Diagram **NOT** accurately drawn

Solid A has a volume of 80 cm^3.

(a) Work out the volume of solid B.

..... cm^3

(2)

Solid B has a total surface area of 160 cm^2.

(b) Work out the total surface area of solid A.

..... cm^2

(2)

(Total for Question 25 is 4 marks)

11 The diagram shows a cube and a cuboid.

Diagram **NOT** accurately drawn

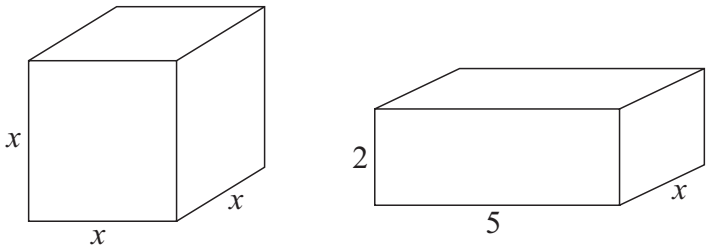

All the measurements are in cm.
The volume of the cube is 100 cm^3 more than the volume of the cuboid.

(a) Show that $x^3 - 10x = 100$

(2)

(b) Use a trial and improvement method to find the value of x.
Give your answer correct to 1 decimal place.
You must show **all** your working.

$x =$ .....

(4)

(Total for Question 11 is 6 marks)

23 The diagram shows a pyramid.

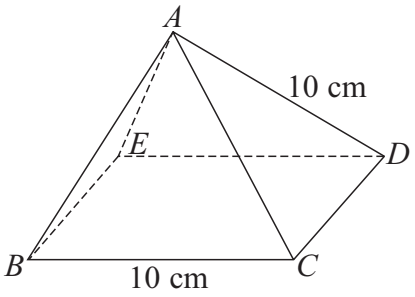

Diagram **NOT** accurately drawn

BCDE is a square with sides of length 10 cm.
The other faces of the pyramid are equilateral triangles with sides of length 10 cm.

(a) Calculate the volume of the pyramid.
Give your answer correct to 3 significant figures.

..... cm^3

(4)

(b) Find the size of angle *DAB*.

.....°

(2)

(Total for Question 23 is 6 marks)

11

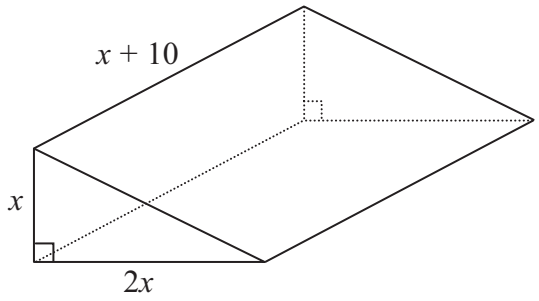

Diagram **NOT** accurately drawn

The diagram shows a solid triangular prism.
All the measurements are in centimetres.

The volume of the prism is V cm^3.

Find a formula for V in terms of x.
Give your answer in simplified form.

.....

(Total for Question 11 is 3 marks)

12

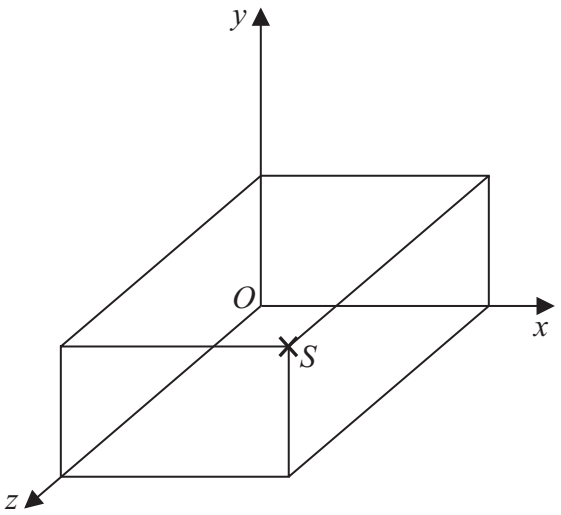

Diagram **NOT** accurately drawn

The diagram shows a cuboid drawn on a 3-D grid.

Three of the vertices of the cuboid are P (3, 2, 0)
Q (3, 0, 0)
R (3, 0, 4)

(a) Label the vertex Q with a cross (×).

(1)

The vertex S is shown on the diagram.

(b) Write down the coordinates of the vertex S.

(..... , ... , ...)

(1)

(Total for Question 12 is 2 marks)

9 The diagram shows an L-shaped prism.

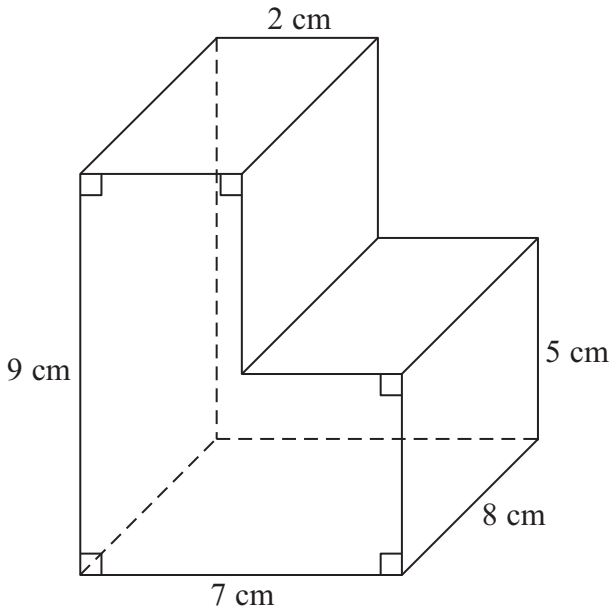

Diagram **NOT** accurately drawn

Calculate the volume of the prism.

..... cm^3

(Total for Question 9 is 3 marks)

12 Ella is designing a glass in the shape of a cylinder.

The glass must hold a minimum of $\frac{1}{2}$ litre of liquid.

The glass must have a diameter of 8 cm.

Calculate the minimum height of the glass.

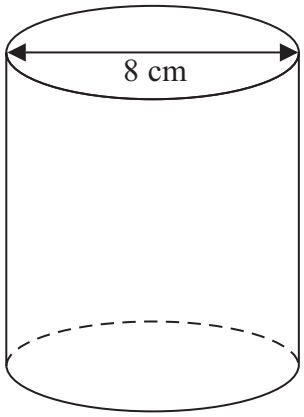

Diagram **NOT** accurately drawn

..... cm

(Total for Question 12 is 5 marks)

23 The diagram shows a solid hemisphere of radius 5 cm.

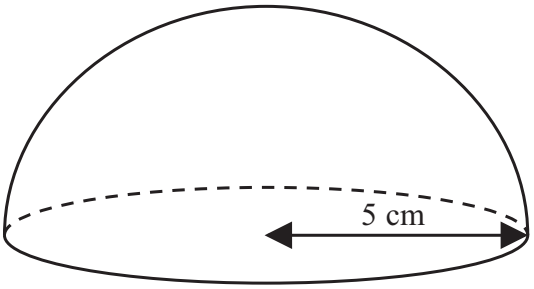

Diagram **NOT** accurately drawn

Find the **total** surface area of the solid hemisphere.
Give your answer in terms of π.

..... cm^2

(Total for Question 23 is 3 marks)

9 Here is a solid prism.

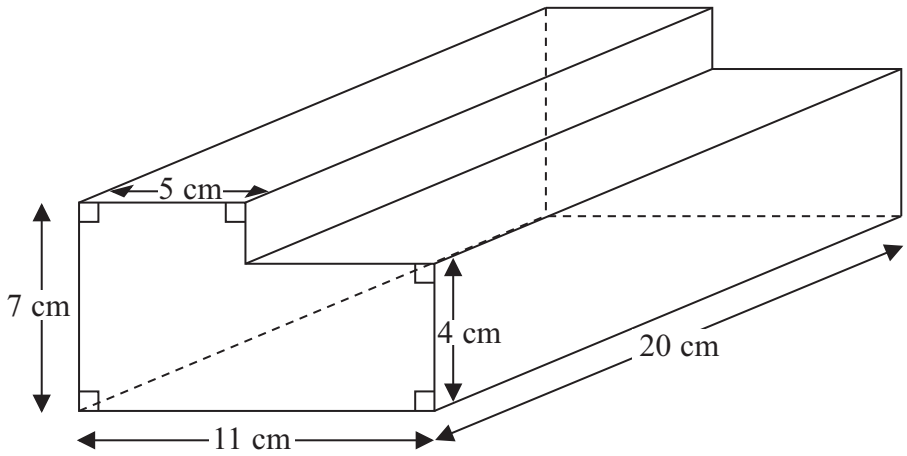

Diagram **NOT** accurately drawn

Work out the volume of the prism.

..... cm^3

(Total for Question 9 is 3 marks)

22

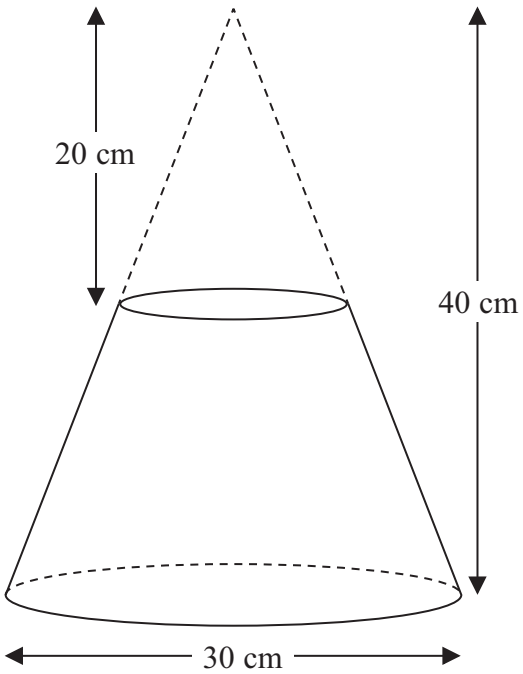

Diagram **NOT** accurately drawn

A frustrum is made by removing a small cone from a similar large cone.

The height of the small cone is 20 cm.
The height of the large cone is 40 cm.
The diameter of the base of the large cone is 30 cm.

Work out the volume of the frustrum.
Give your answer correct to 3 significant figures.

..... cm^3

(Total for Question 22 is 4 marks)

11 The diagram represents a shed.

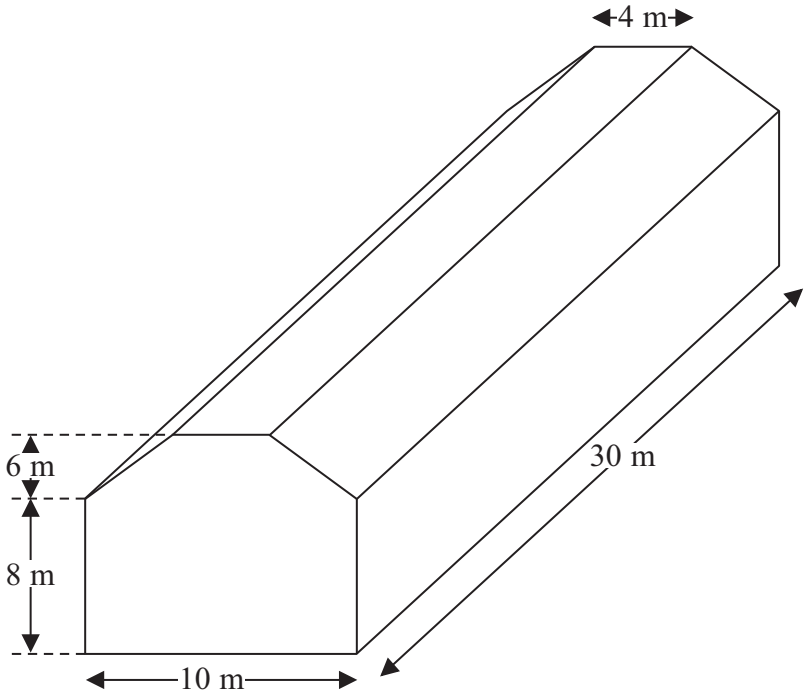

Diagram **NOT** accurately drawn

The shed is in the shape of a prism.
The cross section of the prism is a hexagon.
The hexagon has one line of symmetry.
The walls of the shed are vertical.

Calculate the volume of the shed.

..... m^3

(Total for Question 11 is 4 marks)

16 Here is a vase in the shape of a cylinder.

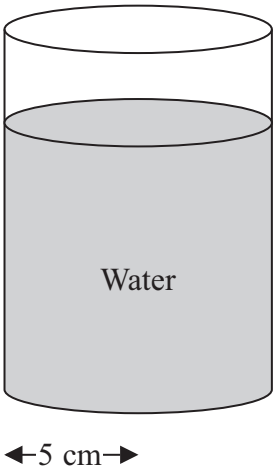

Diagram **NOT** accurately drawn

The vase has a radius of 5 cm.

There are 1000 cm^3 of water in the vase.

Work out the depth of the water in the vase.
Give your answer correct to 1 decimal place.

..... cm

(Total for Question 16 is 3 marks)

21 A solid sphere has

a mass of 1180 g measured to the nearest gram
and a radius of 6.2 cm measured to the nearest millimetre.

Given that

$$\text{density} = \frac{\text{mass}}{\text{volume}}$$

find the upper bound for the density of the sphere.
Give your answer to 3 significant figures.

..... g/cm^3

(Total for Question 21 is 4 marks)

17 Sumeet has a pond in the shape of a prism.

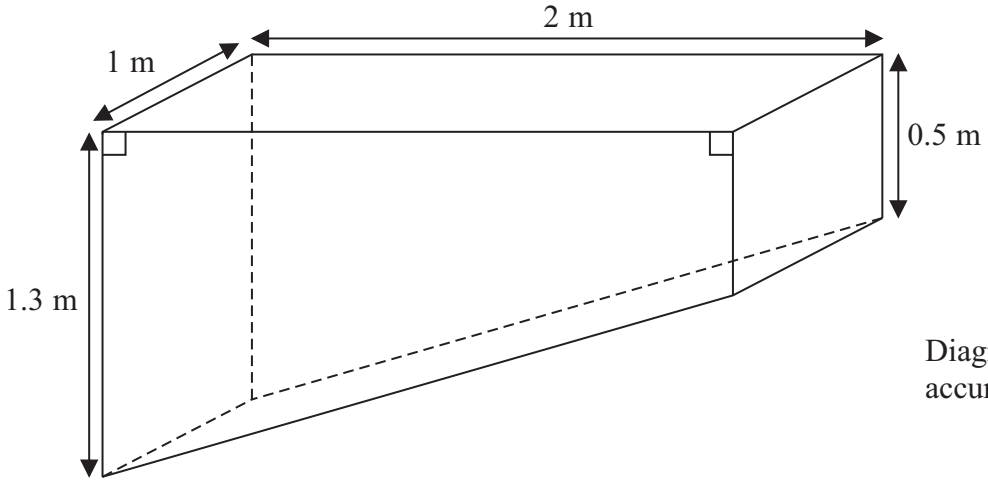

Diagram **NOT** accurately drawn

The pond is completely full of water.
Sumeet wants to empty the pond so he can clean it.
Sumeet uses a pump to empty the pond.

The volume of water in the pond decreases at a constant rate.
The level of the water in the pond goes down by 20 cm in the first 30 minutes.

Work out how much more time Sumeet has to wait for the pump to empty the pond completely.

.....

(Total for Question 17 is 6 marks)

22 **P** and **Q** are two triangular prisms that are mathematically similar.

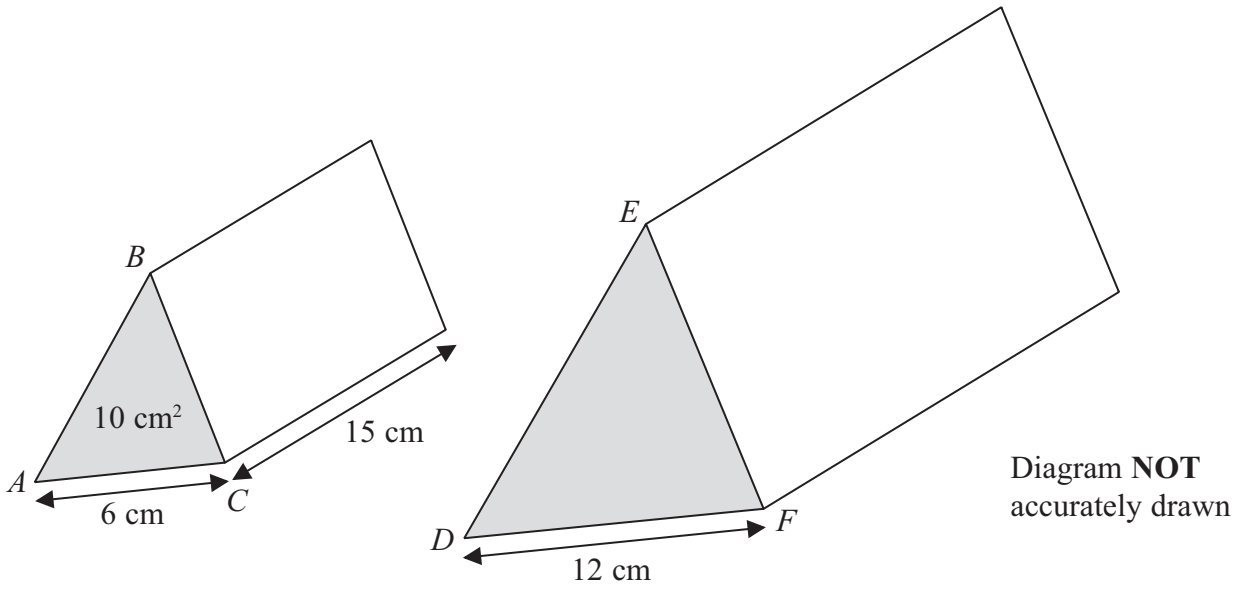

Diagram **NOT** accurately drawn

Prism P **Prism Q**

Prism **P** has triangle ABC as its cross section.
Prism **Q** has triangle DEF as its cross section.

$AC = 6$ cm
$DF = 12$ cm

The area of the cross section of prism **P** is 10 cm^2.
The length of prism **P** is 15 cm.

Work out the volume of prism **Q**.

.....

(Total for Question 22 is 4 marks)

1 Here is a cuboid.

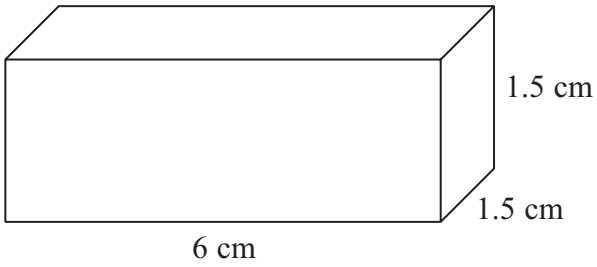

Diagram **NOT** accurately drawn

The cuboid is 6 cm by 1.5 cm by 1.5 cm.

Work out the total surface area of the cuboid.

..... cm^2

(Total for Question 1 is 3 marks)

7

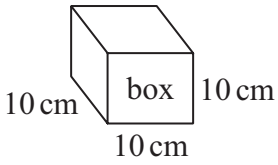

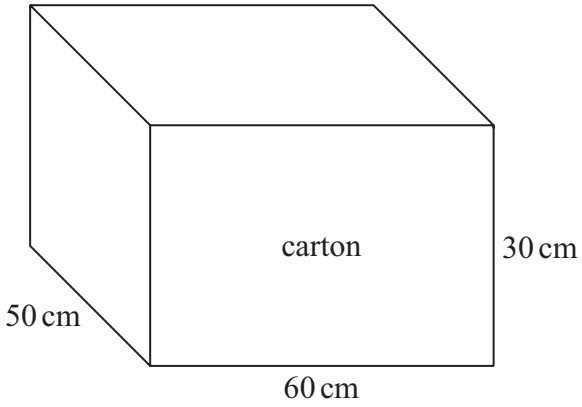

Diagrams **NOT** accurately drawn

Terry fills a carton with boxes.
Each box is a cube of side 10 cm.

The carton is a cuboid with

length	60 cm
width	50 cm
height	30 cm

Work out the number of boxes Terry needs to fill one carton completely.

.....

(Total for Question 7 is 3 marks)

9

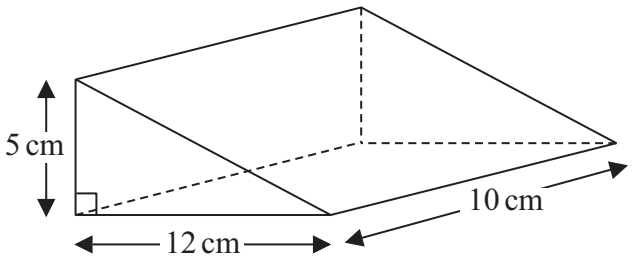

Diagram **NOT** accurately drawn

Work out the volume of the triangular prism.

..... cm^3

(Total for Question 9 is 2 marks)

3 Here is a triangular prism.

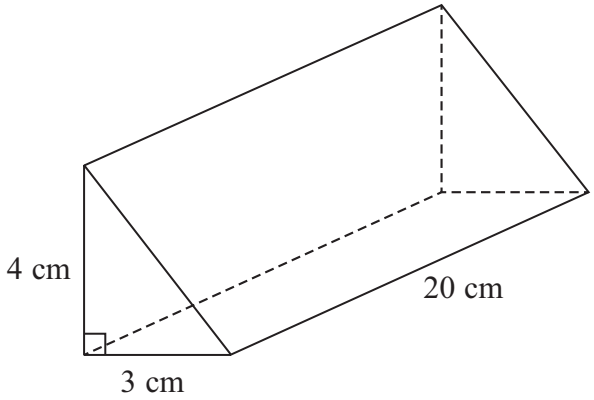

Diagram **NOT** accurately drawn

Work out the volume of this triangular prism.

.....

(Total for Question 3 is 4 marks)

16 A company makes monsters.

The company makes small monsters with a height of 20 cm.

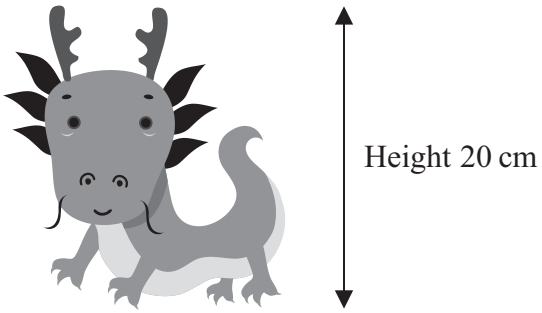

A small monster has a surface area of 300 cm^2.

The company also makes large monsters with a height of 120 cm.

A small monster and a large monster are mathematically similar.

Work out the surface area of a large monster.

..... cm^2

(Total for Question 16 is 3 marks)

24 The diagram shows a large tin of pet food in the shape of a cylinder.

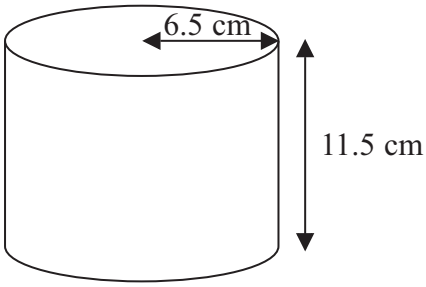

Diagram **NOT** accurately drawn

The large tin has a radius of 6.5 cm and a height of 11.5 cm.

A pet food company wants to make a new size of tin.

The new tin will have a radius of 5.8 cm.
It will have the same volume as the large tin.

Calculate the height of the new tin.
Give your answer correct to one decimal place.

..... cm

(Total for Question 24 is 3 marks)

6 Here is a box in the shape of a cuboid.

Diagram **NOT** accurately drawn

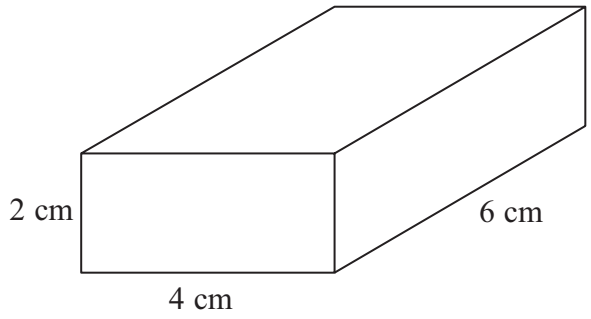

(a) Complete an accurate drawing of the cuboid on the isometric grid.
One edge of the cuboid has been drawn for you.

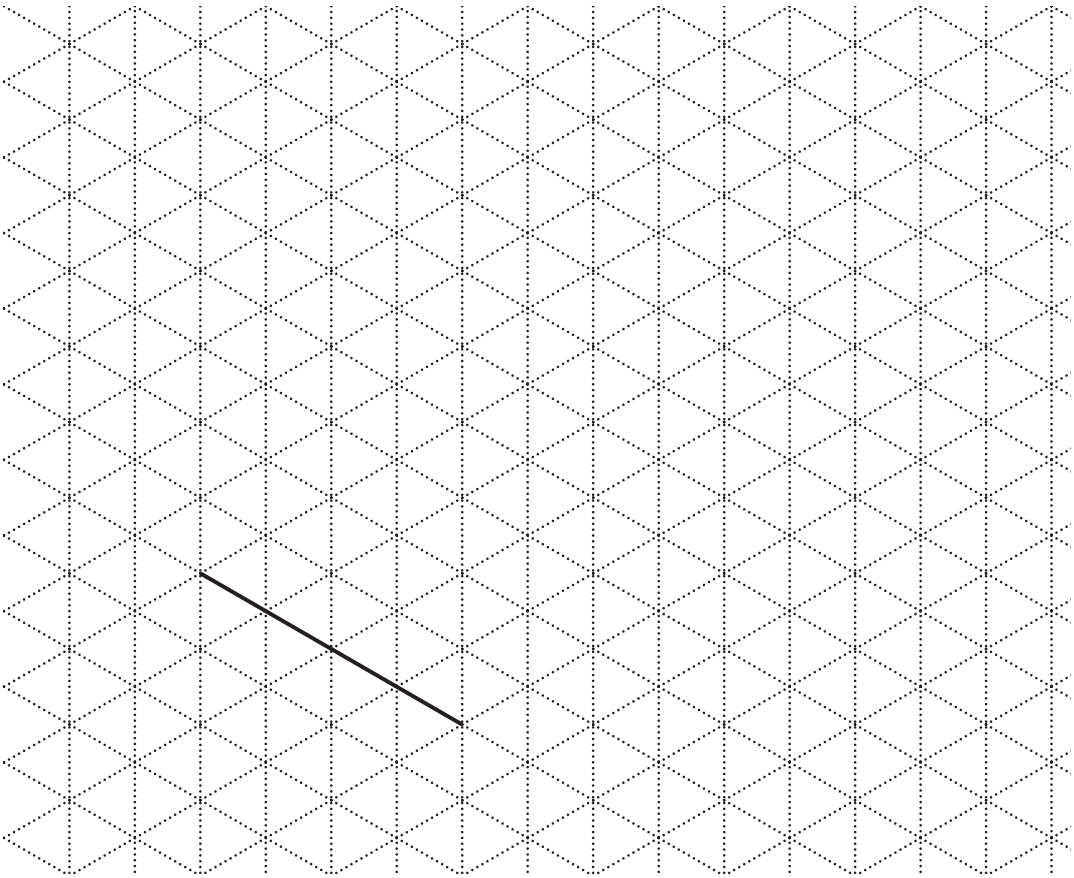

(2)

The box is made to hold cubes.
Each cube has edges of length 2 cm.

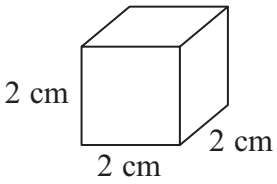

Diagram **NOT** accurately drawn

(b) Work out the largest number of cubes that can fit into the box.

.....

(2)

(Total for Question 6 is 4 marks)

11 Here is the cross section of a steel girder.
The cross section has two lines of symmetry.

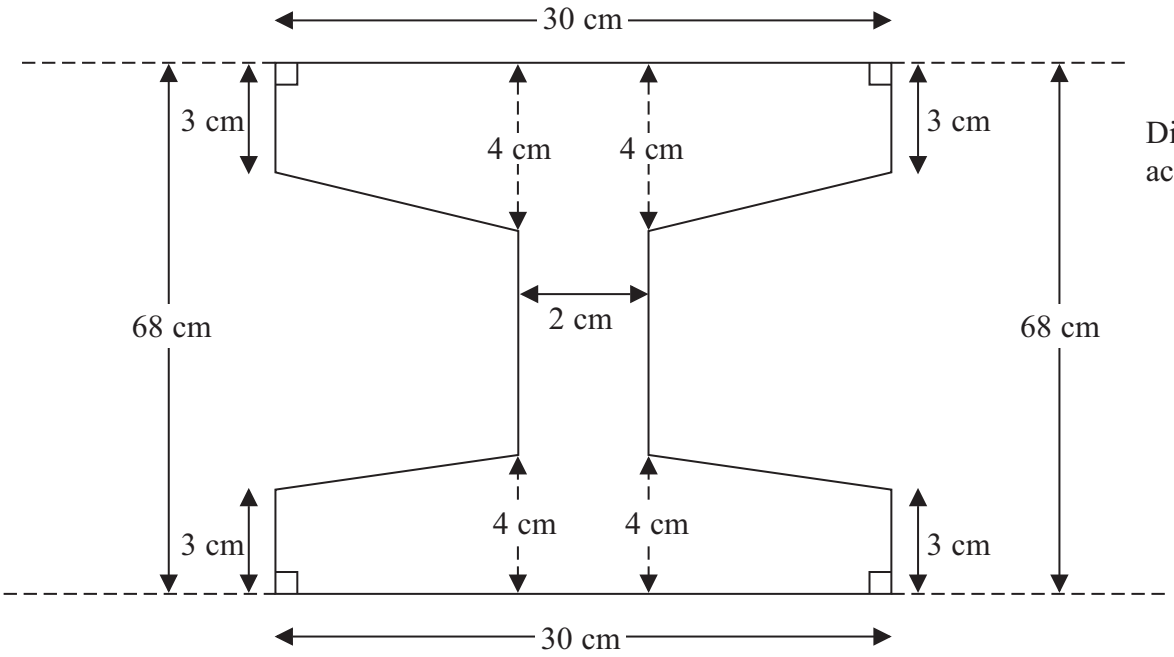

Diagram **NOT** accurately drawn

The girder is a prism.
The length of the girder is 200 cm.

Work out the volume of the girder.

..... cm^3

(Total for Question 11 is 5 marks)

16 Jane has a flower bed in the shape of an equilateral triangle.
The perimeter of the flower bed is 15 metres.

(a) Work out the area of the flower bed.
Give your answer correct to 1 decimal place.

.....m^2
(3)

Jane has some containers in the shape of hemispheres with diameter 35 cm.

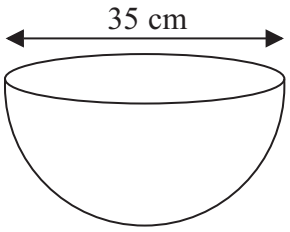

Diagram **NOT** accurately drawn

Jane is going to fill the containers completely with compost.
She has 80 litres of compost.
1 litre = 1000 cm^3.

(b) Work out how many containers Jane can fill completely with compost.

.....
(4)

(Total for Question 16 is 7 marks)

16 Jane has a flower bed in the shape of an equilateral triangle.
The perimeter of the flower bed is 15 metres.

(a) Work out the area of the flower bed.
Give your answer correct to 1 decimal place.

.....m^2
(3)

Jane has some containers in the shape of hemispheres with diameter 35 cm.

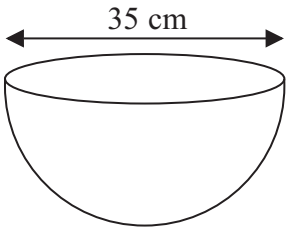

Diagram **NOT** accurately drawn

Jane is going to fill the containers completely with compost.
She has 80 litres of compost.
1 litre = 1000 cm^3.

(b) Work out how many containers Jane can fill completely with compost.

.....
(4)

(Total for Question 16 is 7 marks)

25 The diagram shows a solid made from a hemisphere and a cone.

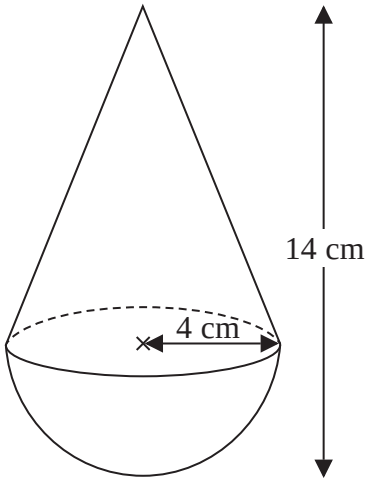

Diagram **NOT** accurately drawn

The radius of the hemisphere is 4 cm.
The radius of the base of the cone is 4 cm.

Calculate the volume of the solid.
Give your answer correct to 3 significant figures.

..... cm^3

(Total for Question 25 is 3 marks)

***4** 140 children will be at a school sports day.
Lily is going to give a cup of orange drink to each of the 140 children.
She is going to put 200 millilitres of orange drink in each cup.

The orange drink is made from orange squash and water.
The orange squash and water are mixed in the ratio 1 : 9 by volume.

Orange squash is sold in bottles containing 750 millilitres.

Work out how many bottles of orange squash Lily needs to buy.
You must show all your working.

(Total for Question 4 is 4 marks)

6 Ali has some packets.

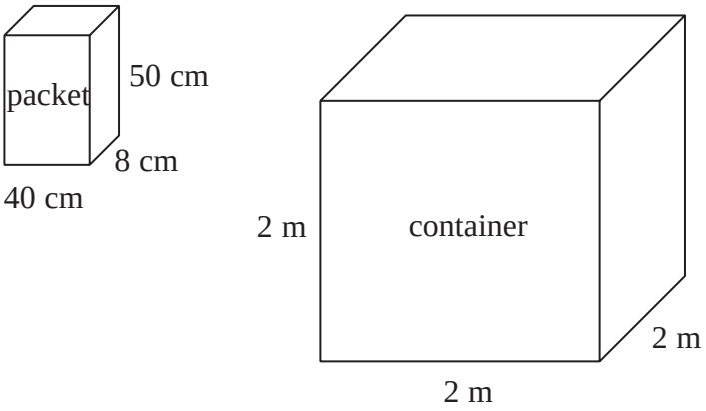

Diagram **NOT** accurately drawn

Each packet has dimensions 40 cm by 8 cm by 50 cm.

Ali fills a container with these packets.
The container is a cube of side 2 m.

Ali fills the container completely with these packets.

Work out the number of packets.

.....

(Total for Question 6 is 4 marks)

***14** This shape is a solid prism.
The cross section of the prism is a trapezium.

Diagram **NOT** accurately drawn

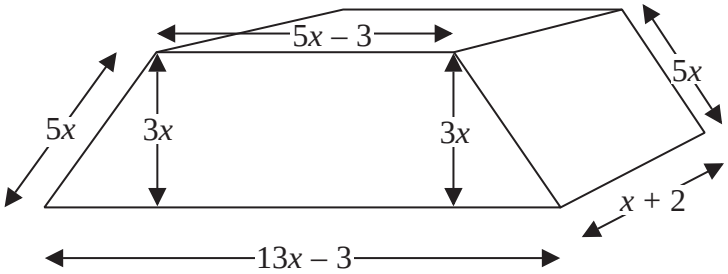

Show that the total surface area of the prism is $82x^2 + 32x - 12$

(Total for Question 14 is 4 marks)

7 The diagram shows a container used to store oil.

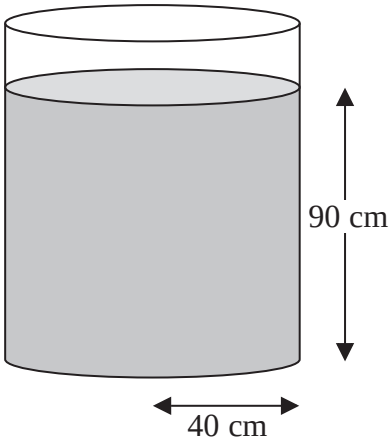

Diagram **NOT** accurately drawn

The container is in the shape of a cylinder of radius 40 cm.

The height of the oil in the container is 90 cm.

65 litres of oil are taken from the container.
1 litre = 1000 cm^3.

Work out the new height of the oil in the container.
Give your answer correct to one decimal place.

..... cm

(Total for Question 7 is 4 marks)

20 The diagram shows a solid shape.

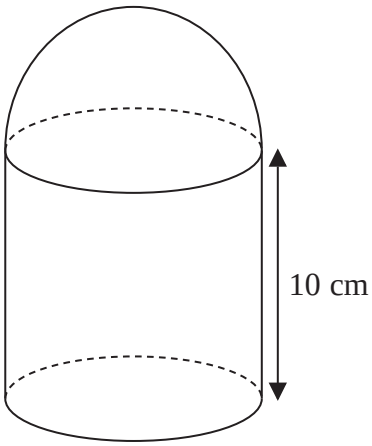

Diagram **NOT** accurately drawn

The solid shape is made from a cylinder and a hemisphere.
The radius of the cylinder is equal to the radius of the hemisphere.

The cylinder has a height of 10 cm.
The curved surface area of the hemisphere is 32π cm^2.

Work out the total surface area of the solid shape.
Give your answer in terms of π.

..... cm^2

(Total for Question 20 is 5 marks)

***6** The diagram shows a box for winter grit.
The box is in the shape of a cuboid.
The box is empty.

Jon wants to fill the box with grit.
A bag of grit costs £2.50
There are 8000 cm^3 of grit in a bag.

Jon has £70 to spend on the grit.

Diagram **NOT** accurately drawn

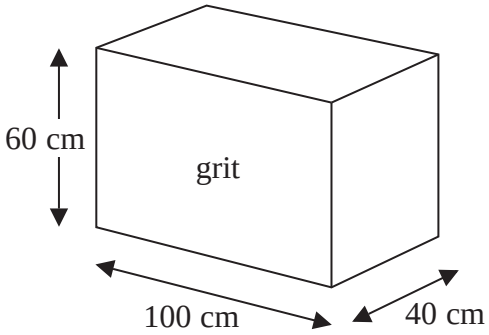

Does Jon have enough money to buy all the grit he needs to fill the box completely?

(Total for Question 6 is 5 marks)

6 The diagram shows a prism.

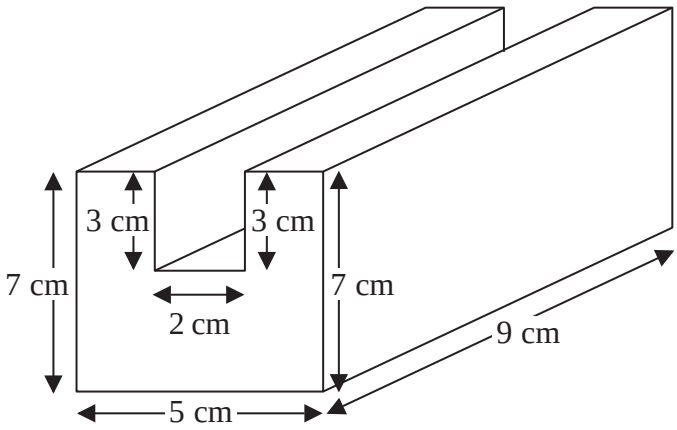

Diagram **NOT** accurately drawn

All the corners are right angles.

Work out the volume of the prism.

.....

(Total for Question 6 is 4 marks)

20 The volume of a sphere is 70 cm^3 correct to the nearest cm^3.

Calculate the upper bound for the surface area of the sphere.
Give your answer correct to 1 decimal place.
You must show all your working.

.....cm^2

(Total for Question 20 is 4 marks)

5 Jane makes cheese.

The cheese is in the shape of a cuboid.

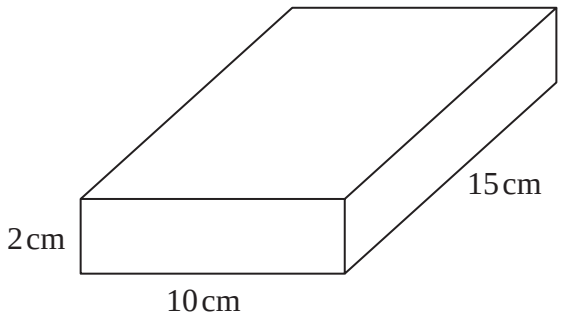

Diagram **NOT** accurately drawn

Jane is going to make a new cheese.

The new cheese will also be in the shape of a cuboid.
The cross section of the cuboid will be a 5 cm by 5 cm square.

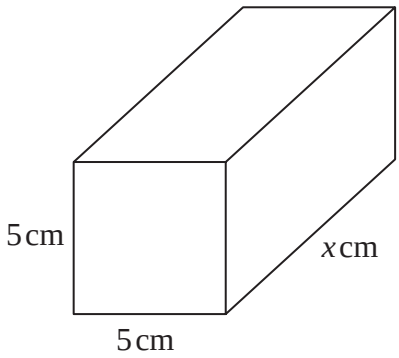

Diagram **NOT** accurately drawn

Jane wants the new cuboid to have the same volume as the 2 cm by 10 cm by 15 cm cuboid.

Work out the value of x.

.....

(Total for Question 5 is 3 marks)

5 The diagram shows a triangular prism.

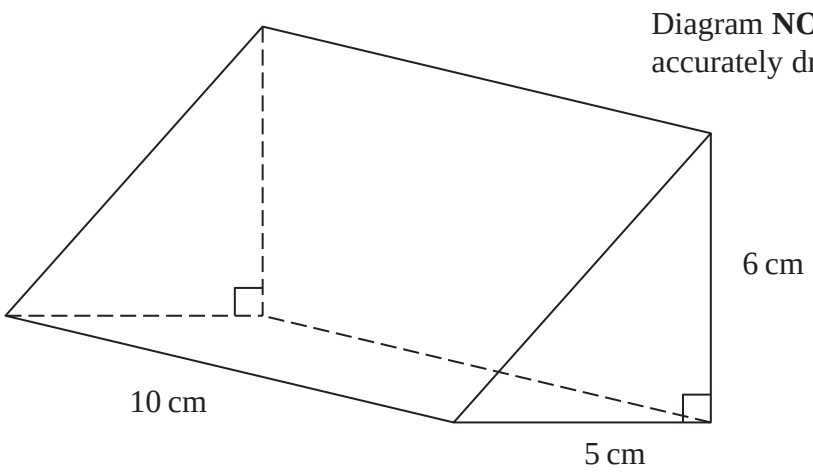

Work out the volume of the prism.

.....

(Total for Question 5 is 3 marks)

6 Gary's motorbike uses petrol.

Gary needs to mix oil with the petrol.
He mixes oil and petrol in the ratio 1 : 14 by volume.

Gary is going to ride his motorbike 3000 miles.
Each 20 miles he rides uses 1 litre of the oil and petrol mixture.

A 500 m*l* bottle of oil costs £3.99

Work out the total cost of the bottles of oil Gary needs to buy.
(1 litre = 1000 m*l*)

You must show all your working.

£.....

(Total for Question 6 is 4 marks)

11 A can of soup is a cylinder with diameter 7 cm.
The can is 10 cm high.
The can is full of soup.

The soup is poured into a saucepan.
The saucepan is a cylinder with diameter 12 cm.

Work out the depth of the soup in the saucepan.
Give your answer correct to 1 decimal place.

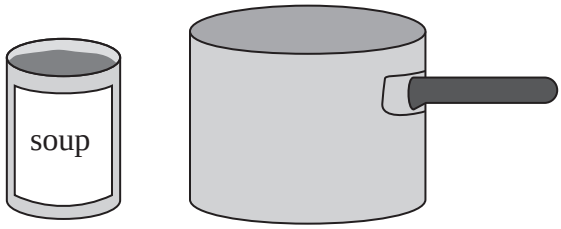

..... cm

(Total for Question 11 is 3 marks)

***9** The diagram shows a container for oil.
The container is in the shape of a cuboid.
The container is empty.

Diagram **NOT** accurately drawn

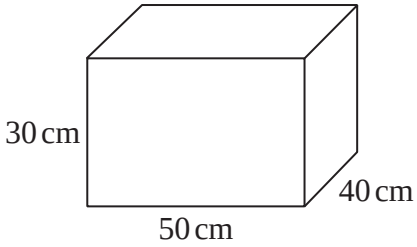

Sally has to fill the container with oil.
A bottle of oil costs £3.50
There are 3000 cm^3 of oil in each bottle.

Sally must **not** spend more than £60 buying the oil.

Can Sally buy enough oil to fill the container?
You must show all your working.

(Total for Question 9 is 4 marks)

19 The diagram shows a solid shape.

Diagram **NOT** accurately drawn

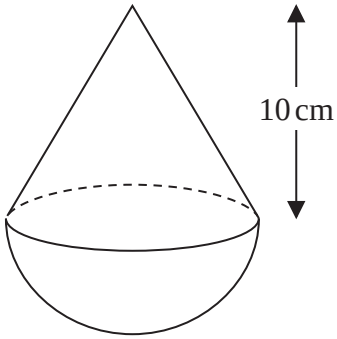

The solid shape is made from a hemisphere and a cone.
The radius of the hemisphere is equal to the radius of the base of the cone.

The cone has a height of 10 cm.
The volume of the cone is $270\pi\,\text{cm}^3$.

Work out the total volume of the solid shape.
Give your answer in terms of π.

..... cm^3

(Total for Question 19 is 5 marks)

3 The diagram shows the area of each of three faces of a cuboid.

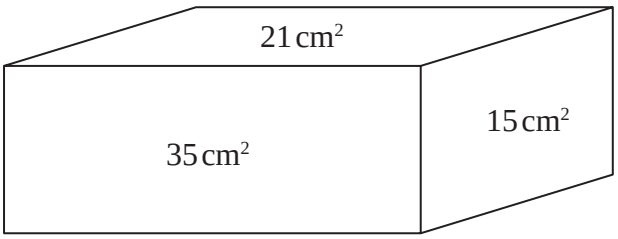

Diagram **NOT** accurately drawn

The length of each edge of the cuboid is a whole number of centimetres.

Work out the volume of the cuboid.

.....

(Total for Question 3 is 4 marks)

8 The diagram shows a prism.

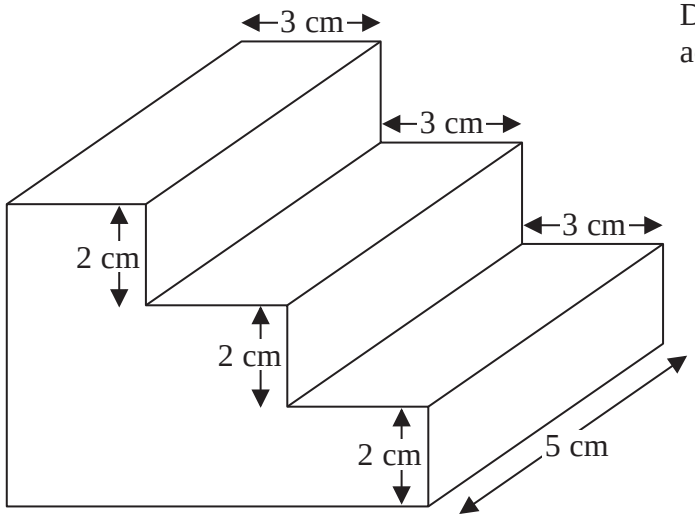

Diagram **NOT** accurately drawn

All the corners are right angles.

Work out the volume of the prism.

.....cm^3

(Total for Question 8 is 3 marks)

1 The diagram shows a prism.

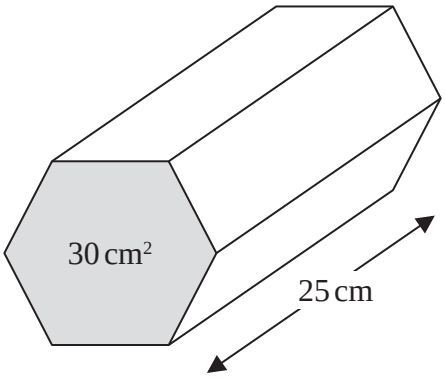

Diagram **NOT** accurately drawn

The area of the cross section of the prism is 30 cm^2.
The length of the prism is 25 cm.

Work out the volume of the prism.

.....

(Total for Question 1 is 3 marks)

14 The diagram shows a metal bar in the shape of a prism.

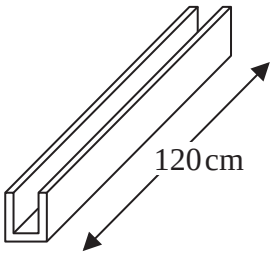

Diagram **NOT** accurately drawn

The length of the metal bar is 120 cm.
The cross section of the metal bar is shown below.

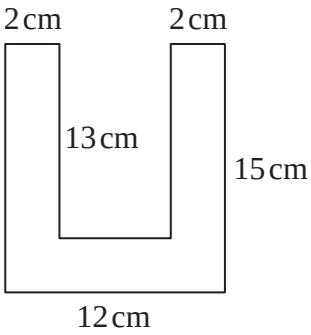

Diagram **NOT** accurately drawn

All corners are right angles.

The metal bar is made from steel with density 8 g/cm^3.

Sean has a trolley.
The trolley can carry a maximum mass of 250 kg.

How many metal bars can the trolley carry at the same time?
You must show your working.

.....

(Total for Question 14 is 5 marks)

Question 81

***4**

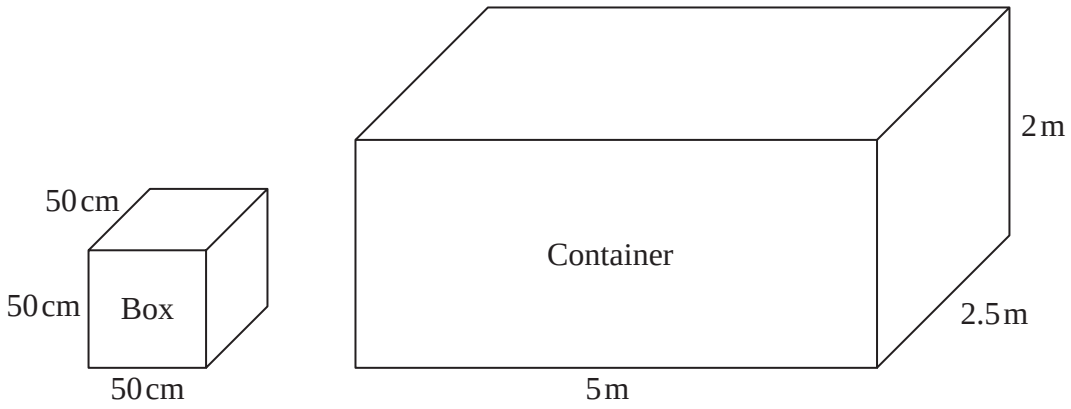

Diagram **NOT** accurately drawn

Chao transports microwave ovens from China to the UK.

He puts each microwave oven in a box.
Each box is a cube of side 50 cm.

He then puts each box in a container.
Each container is a cuboid of size 5 m by 2.5 m by 2 m.

Chao has 500 boxes.
He has 3 containers.

Will the 500 boxes fit into these 3 containers?

(Total for Question 4 is 4 marks)

9

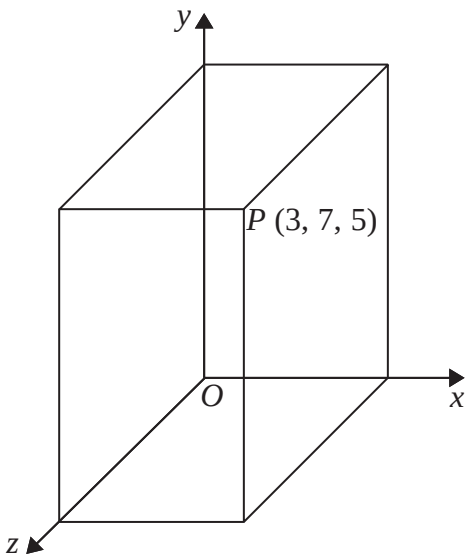

Diagram **NOT** accurately drawn

The diagram shows a cuboid drawn on a 3-D coordinate grid.
All measurements are in cm.

P is a vertex of the cuboid.
The coordinates of *P* are (3, 7, 5).

Work out the surface area of the cuboid.

..... cm^2

(Total for Question 9 is 3 marks)

***6** The diagram shows the surface of a pond in the shape of a circle.

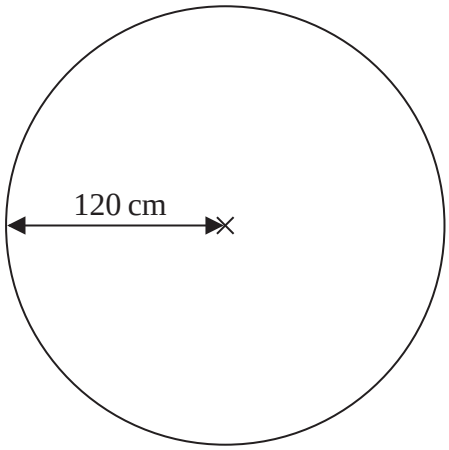

Diagram **NOT** accurately drawn

The circle has a radius of 120 cm.

Mark wants to put 20 fish into the pond.
There needs to be a surface area of 1800 cm^2 for each fish.

Show that the surface of the pond is large enough for Mark to put 20 fish into the pond.

(Total for Question 6 is 4 marks)

9 Here is a solid prism.

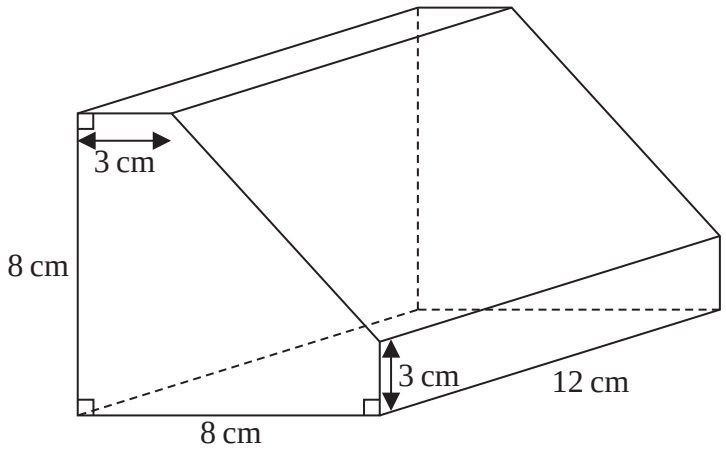

Diagram **NOT** accurately drawn

Work out the volume of the prism.
You must show all your working.

..... cm^3

(Total for Question 9 is 4 marks)

22 The diagram shows a prism.

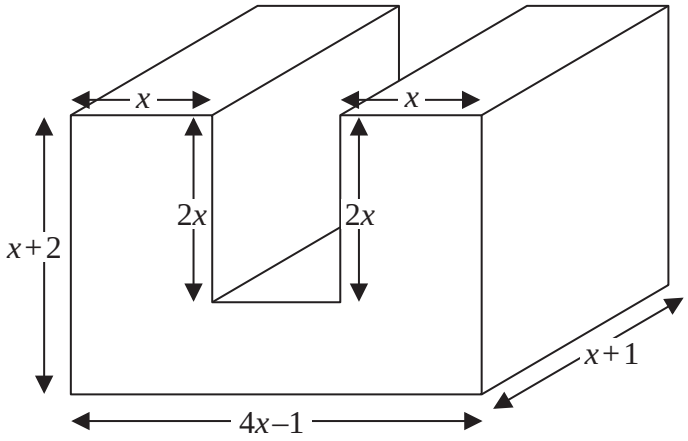

Diagram **NOT** accurately drawn

All measurements are in centimetres.
All corners are right angles.

Find an expression, in terms of x, for the volume, in cm^3, of the prism.
You must show your working.
Give your answer in its simplest form.

.....

(Total for Question 22 is 4 marks)

27 The diagram shows a sphere and a solid cylinder.

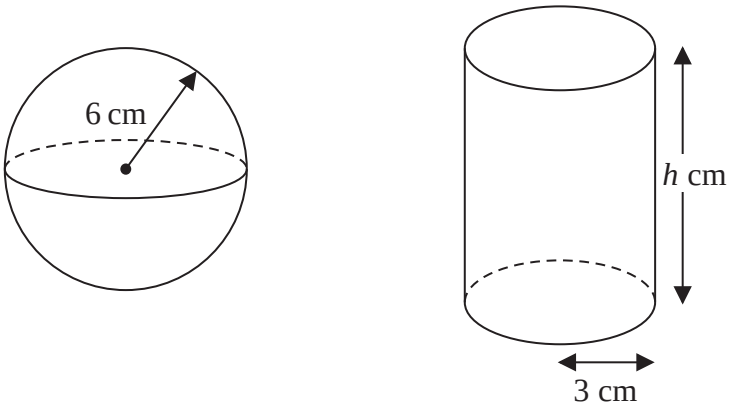

Diagram **NOT** accurately drawn

The sphere has radius 6 cm.
The solid cylinder has a base radius of 3 cm and a height of h cm.

The total surface area of the cylinder is twice the total surface area of the sphere.

Work out the ratio of the volume of the sphere to the volume of the cylinder.
Give your answer in its simplest form.
You must show all your working.

.....

(Total for Question 27 is 5 marks)

8 Here is a prism.

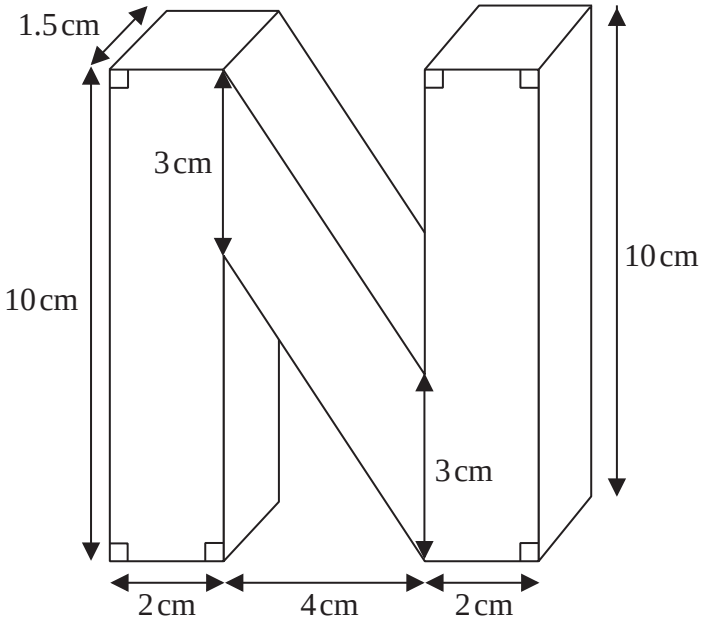

Diagram **NOT** accurately drawn

Work out the volume of the prism.

.....cm^3

(Total for Question 8 is 4 marks)

12 A cuboid has dimensions $2x$ cm, x cm and $(x + 4)$ cm.

The volume of the cuboid is 180 cm^3.

Diagram **NOT** accurately drawn

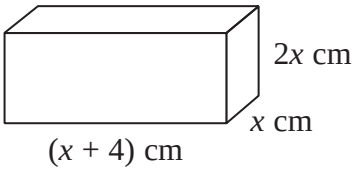

(a) Show that $x^3 + 4x^2 = 90$

(2)

The equation $x^3 + 4x^2 = 90$ has a solution between $x = 3$ and $x = 4$

(b) Use a trial and improvement method to find this solution.
Give your answer correct to 1 decimal place.
You must show all your working.

.....

(4)

(Total for Question 12 is 6 marks)

23 A machine puts drinks into cups.
The volume of a cup is 200 m*l*, correct to the nearest 0.5 m*l*.

(a) Write down the lower bound for the volume of a cup.

..... m*l*

(1)

The machine puts tea and milk into each cup.
It puts into each cup

175 m*l* of tea measured correct to the nearest m*l*
24 m*l* of milk measured correct to the nearest m*l*

*(b) Is it possible that the total volume of tea and milk put in a cup is greater than the volume of the cup?
You must show how you get your answer.

(3)

(Total for Question 23 is 4 marks)

7 Frances grows plants in a container.
Each of the 5 faces of the container is made of glass.

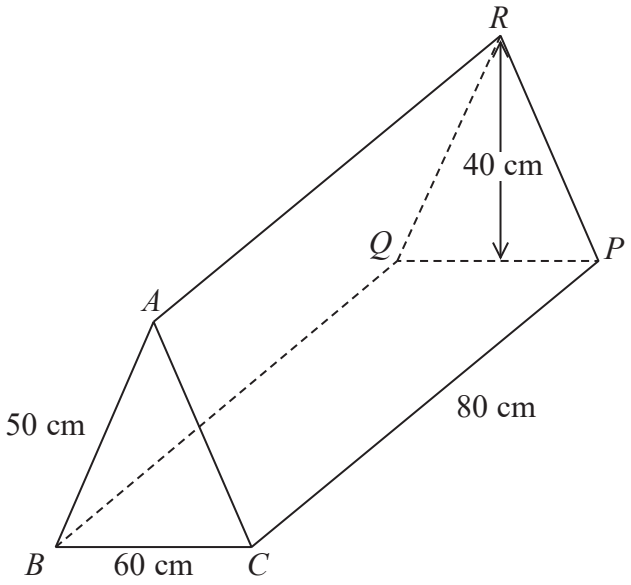

Diagram **NOT** accurately drawn

The container is in the shape of a prism.
The cross section of the prism is an isosceles triangle with height 40 cm.

$BC = 60$ cm
$AB = AC = 50$ cm
$CP = 80$ cm

Work out the total area of glass needed to make the container.

.....cm^2

(Total for Question 7 is 3 marks)

12 Sanders has a water tank for storing rainwater.

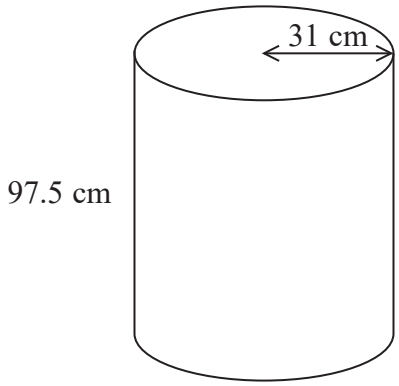

Diagram **NOT** accurately drawn

The tank is in the shape of a cylinder.
The radius of the cylinder is 31 cm.
The height of the cylinder is 97.5 cm.

The tank is full of water.

Work out an estimate for the volume of water in the tank.
Give your answer in litres.
You must show your working.

Use 1000 cm^3 = 1 litre.

.....litres

(Total for Question 12 is 3 marks)

15 A cone has a volume of 98 cm^3.
The radius of the cone is 5.13 cm.

(a) Work out an estimate for the height of the cone.

Volume of cone = $\frac{1}{3}\pi r^2 h$

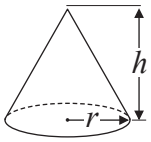

.....cm

(3)

John uses a calculator to work out the height of the cone to 2 decimal places.

(b) Will your estimate be more than John's answer or less than John's answer?
Give reasons for your answer.

.....

.....

.....

(1)

(Total for Question 15 is 4 marks)

3 The diagram shows a prism with a cross section in the shape of a trapezium.

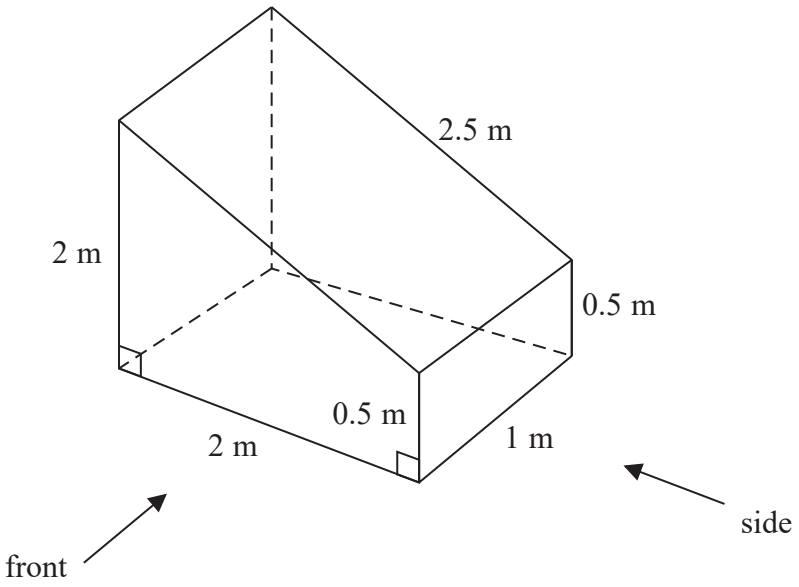

On the centimetre grid below, draw the front elevation and the side elevation of the prism.
Use a scale of 2 cm to 1 m.

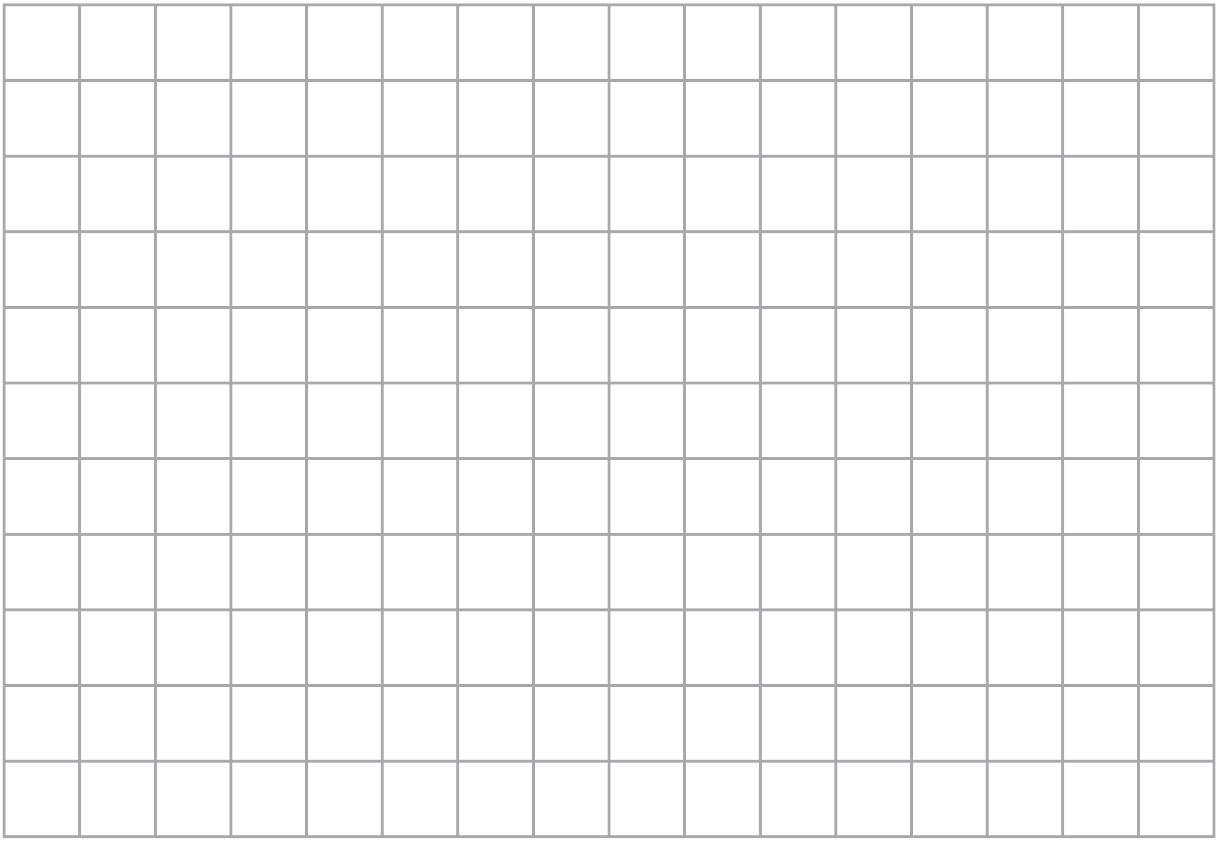

(Total for Question 3 is 4 marks)

6 The density of apple juice is 1.05 grams per cm^3.

The density of fruit syrup is 1.4 grams per cm^3.

The density of carbonated water is 0.99 grams per cm^3.

25 cm^3 of apple juice are mixed with 15 cm^3 of fruit syrup and
280 cm^3 of carbonated water to make a drink with a volume of 320 cm^3.

Work out the density of the drink.
Give your answer correct to 2 decimal places.

.....g/cm^3

(Total for Question 6 is 4 marks)

Question 95

18 At time $t = 0$ hours a tank is full of water.

Water leaks from the tank.
At the end of every hour there is 2% less water in the tank than at the start of the hour.

The volume of water, in litres, in the tank at time t hours is V_t

Given that

$$V_0 = 2000$$
$$V_{t+1} = kV_t$$

write down the value of k.

$k =$ .....

(Total for Question 18 is 1 mark)

Question 96

3 A gold bar has a mass of 12.5 kg.

The density of gold is 19.3 g/cm^3

Work out the volume of the gold bar.
Give your answer correct to 3 significant figures.

..... cm^3

(Total for Question 3 is 3 marks)

14 Cone **A** and cone **B** are mathematically similar.
The ratio of the volume of cone **A** to the volume of cone **B** is 27 : 8

The surface area of cone **A** is 297 cm^2

Show that the surface area of cone **B** is 132 cm^2

(Total for Question 14 is 3 marks)

5 Here is a solid square-based pyramid, *VABCD*.

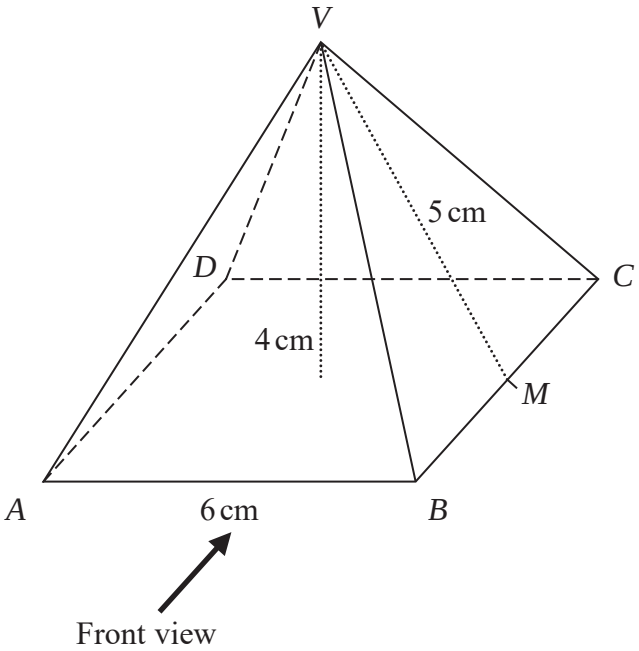

The base of the pyramid is a square of side 6 cm.
The height of the pyramid is 4 cm.
M is the midpoint of *BC* and *VM* = 5 cm.

(a) Draw an accurate front elevation of the pyramid from the direction of the arrow.

(2)

(b) Work out the total surface area of the pyramid.

.....

(4)

(Total for Question 5 is 6 marks)

19 Shape **S** is one quarter of a solid sphere, centre O.

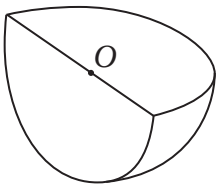

Shape **S**

Volume of sphere $= \frac{4}{3}\pi r^3$

Surface area of sphere $= 4\pi r^2$

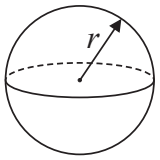

The volume of **S** is 576π cm^3

Find the surface area of **S**.
Give your answer correct to 3 significant figures.
You must show your working.

..... cm^2

(Total for Question 19 is 5 marks)

12 The graph shows the volume of liquid (L litres) in a container at time t seconds.

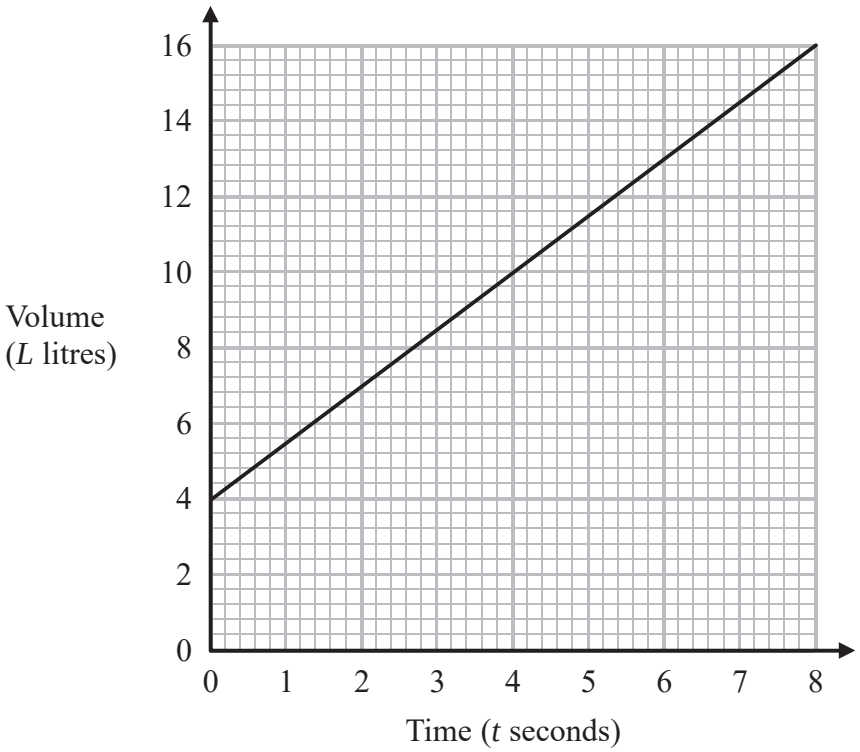

(a) Find the gradient of the graph.

.....

(2)

(b) Explain what this gradient represents.

.....

.....

(1)

The graph intersects the volume axis at $L = 4$

(c) Explain what this intercept represents.

.....

.....

(1)

(Total for Question 12 is 4 marks)

13 Here are two similar solid shapes.

A



B



surface area of shape **A** : surface area of shape **B** = 3 : 4

The volume of shape **B** is 10 cm^3

Work out the volume of shape **A**.
Give your answer correct to 3 significant figures.

..... cm^3

(Total for Question 13 is 3 marks)

Question 102

15 Three solid shapes **A**, **B** and **C** are similar.

The surface area of shape **A** is $4\,cm^2$
The surface area of shape **B** is $25\,cm^2$

The ratio of the volume of shape **B** to the volume of shape **C** is $27 : 64$

Work out the ratio of the height of shape **A** to the height of shape **C**.
Give your answer in its simplest form.

.....

(Total for Question 15 is 4 marks)

20 Here is a frustum of a cone.

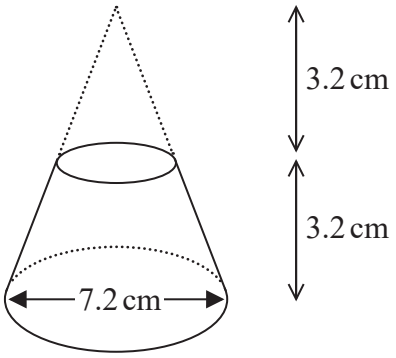

Volume of sphere $= \frac{4}{3}\pi r^3$

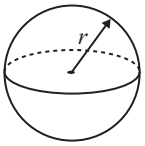

Volume of cone $= \frac{1}{3}\pi r^2 h$

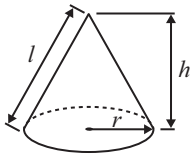

The diagram shows that the frustum is made by removing a cone with height 3.2 cm from a solid cone with height 6.4 cm and base diameter 7.2 cm.

The frustum is joined to a solid hemisphere of diameter 7.2 cm to form the solid **S** shown below.

Solid **S**

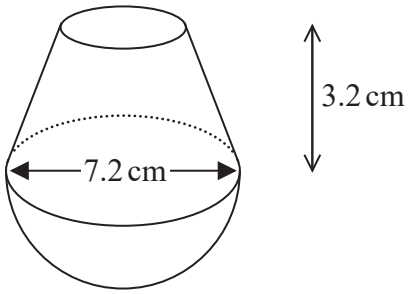

The density of the frustum is 2.4 g/cm^3
The density of the hemisphere is 4.8 g/cm^3

Calculate the average density of solid **S**.

.....g/cm^3

(Total for Question 20 is 5 marks)

8 The diagram shows a solid metal cuboid.

The areas of three of the faces are marked on the diagram.
The lengths, in cm, of the edges of the cuboid are whole numbers.

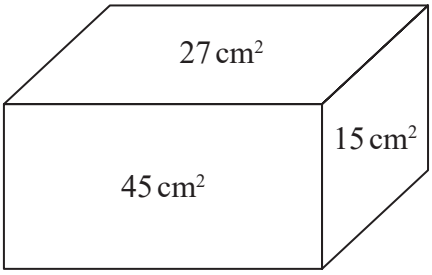

The metal cuboid is melted and made into cubes.
Each of the cubes has sides of length 2.5 cm.

Work out the greatest number of these cubes that can be made.

.....

(Total for Question 8 is 5 marks)

12 Here are three spheres.

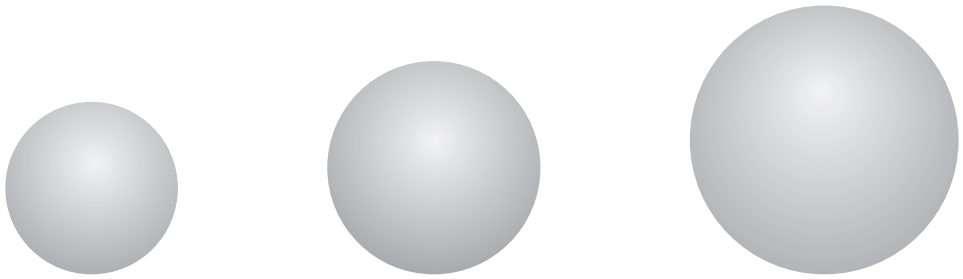

P **Q** **R**

The volume of sphere **Q** is 50% more than the volume of sphere **P**.
The volume of sphere **R** is 50% more than the volume of sphere **Q**.

Find the volume of sphere **P** as a fraction of the volume of sphere **R**.

.....

(Total for Question 12 is 3 marks)

15 The diagram shows a solid shape.
The shape is a cone on top of a hemisphere.

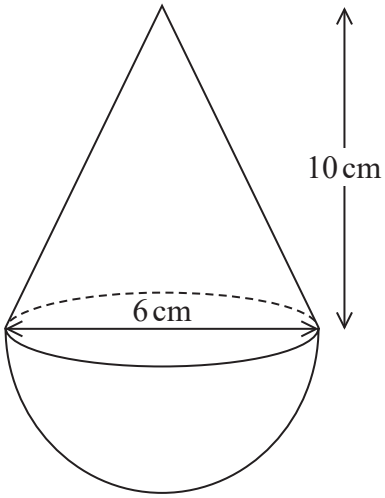

Volume of a cone = $\frac{1}{3}\pi r^2 h$

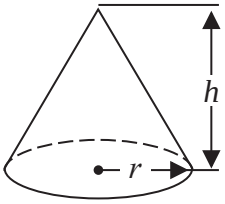

Volume of a sphere = $\frac{4}{3}\pi r^3$

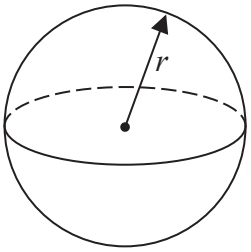

The height of the cone is 10 cm.
The base of the cone has a diameter of 6 cm.
The hemisphere has a diameter of 6 cm.

The total volume of the shape is $k\pi$ cm^3, where k is an integer.

Work out the value of k.

$k =$ .....

(Total for Question 15 is 4 marks)

4 A container is in the shape of a cuboid.

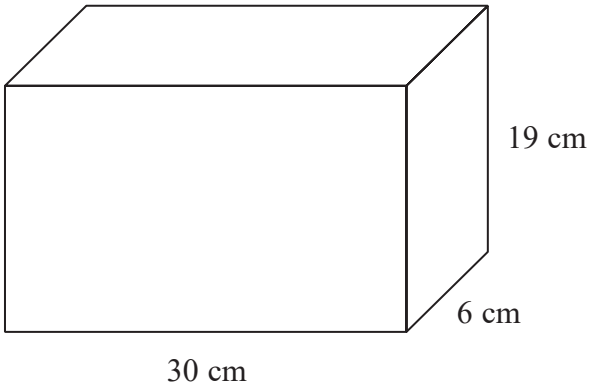

The container is $\frac{2}{3}$ full of water.

A cup holds 275 m*l* of water.

What is the greatest number of cups that can be completely filled with water from the container?

.....

(Total for Question 4 is 4 marks)

6 Jeremy has to cover 3 tanks completely with paint.

Each tank is in the shape of a cylinder with a top and a bottom.
The tank has a diameter of 1.6 m and a height of 1.8 m.

Jeremy has 7 tins of paint.
Each tin of paint covers 5 m^2

Has Jeremy got enough paint to cover completely the 3 tanks?
You must show how you get your answer.

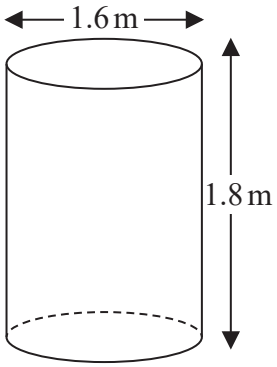

(Total for Question 6 is 5 marks)

17 **A** and **B** are two similar cylindrical containers.

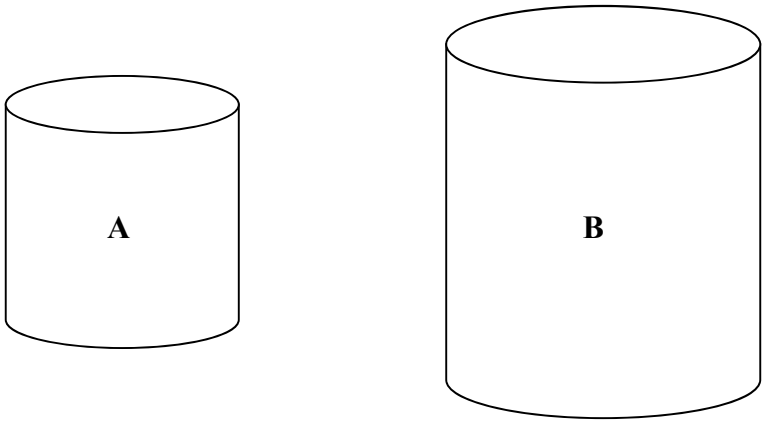

the surface area of container **A** : the surface area of container **B** = 4 : 9

Tyler fills container **A** with water.
She then pours all the water into container **B**.
Tyler repeats this and stops when container **B** is full of water.

Work out the number of times that Tyler fills container **A** with water.
You must show all your working.

.....

(Total for Question 17 is 4 marks)

9 The diagram shows a cube and a cuboid.

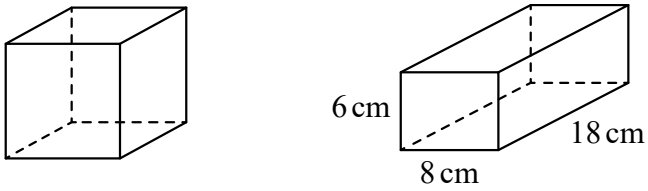

The total surface area of the cube is equal to the total surface area of the cuboid.

Janet says,

"The volume of the cube is equal to the volume of the cuboid."

Is Janet correct?
You must show how you get your answer.

(Total for Question 9 is 5 marks)

19 The diagram shows a hemisphere with diameter 8.4 cm.

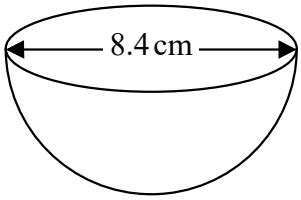

Volume of sphere $= \frac{4}{3}\pi r^3$

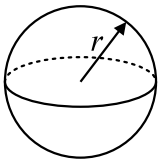

Work out the volume of the hemisphere.
Give your answer correct to 3 significant figures.

..... cm^3

(Total for Question 19 is 2 marks)

13 Liquid A and liquid B are mixed together in the ratio 2 : 13 by volume to make liquid C.

Liquid A has density 1.21 g/cm^3
Liquid B has density 1.02 g/cm^3

A cylindrical container is filled completely with liquid C.
The cylinder has radius 3 cm and height 25 cm.

Work out the mass of the liquid in the container.
Give your answer correct to 3 significant figures.
You must show all your working.

..... g

(Total for Question 13 is 4 marks)

23 The diagram shows a sector $OACB$ of a circle with centre O.
The point C is the midpoint of the arc AB.

The diagram also shows a hollow cone with vertex O.
The cone is formed by joining OA and OB.

Volume of cone $= \frac{1}{3}\pi r^2 h$

Curved surface area of cone $= \pi r l$

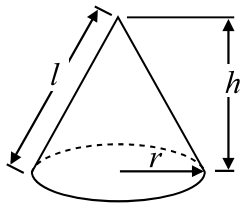

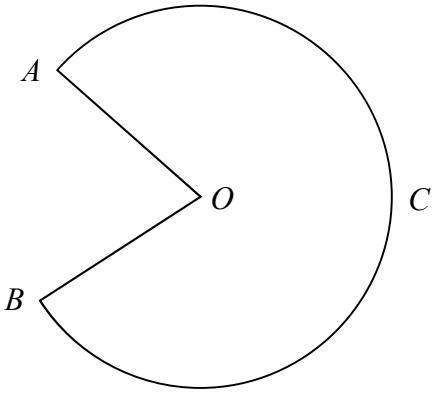

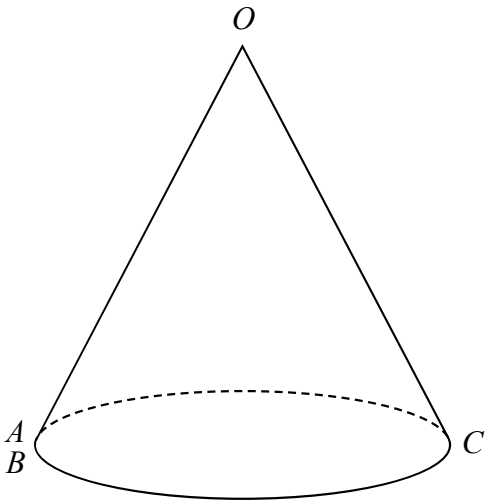

The cone has volume $56.8\,\text{cm}^3$ and height $3.6\,\text{cm}$.

Calculate the size of angle AOB of sector $OACB$.
Give your answer correct to 3 significant figures.
You must show all your working.

.....°

(Total for Question 23 is 5 marks)

8 The diagram shows a prism placed on a horizontal floor.

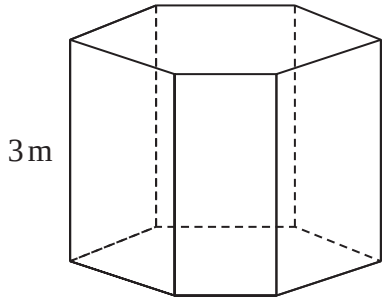

$$\text{pressure} = \frac{\text{force}}{\text{area}}$$

The prism has height 3 m
The volume of the prism is 18 m^3

The pressure on the floor due to the prism is 75 newtons/m^2

Work out the force exerted by the prism on the floor.

..... newtons

(Total for Question 8 is 3 marks)

13 Liquid **A** and liquid **B** are mixed to make liquid **C**.

Liquid **A** has a density of 70 kg/m^3
Liquid **A** has a mass of 1400 kg

Liquid **B** has a density of 280 kg/m^3
Liquid **B** has a volume of 30 m^3

Work out the density of liquid **C**.

..... kg/m^3

(Total for Question 13 is 3 marks)

12 The graph gives information about the volume, v litres, of petrol in the tank of Jim's car after it has travelled a distance of d kilometres.

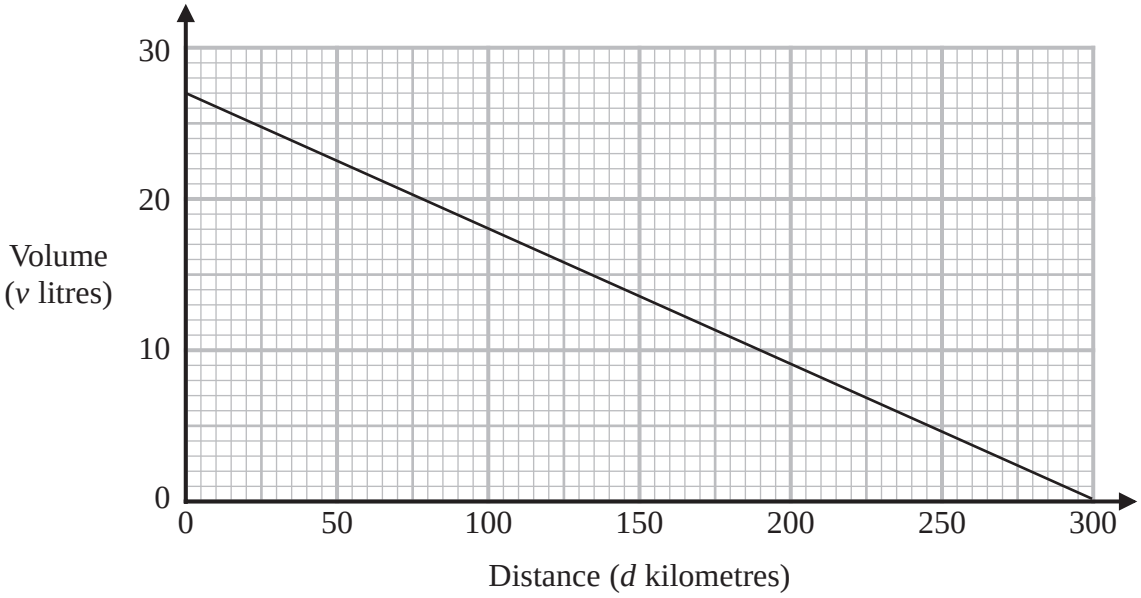

(a) Find the gradient of the graph.

.....

(2)

(b) Interpret what the gradient of the graph represents.

.....

.....

.....

(1)

(Total for Question 12 is 3 marks)

9 The diagram shows a prism.

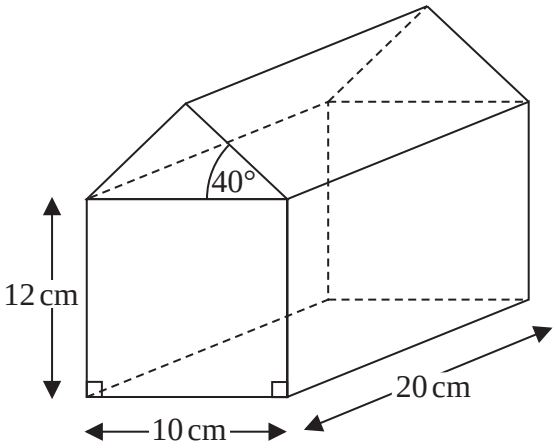

The cross section of the prism has exactly one line of symmetry.

Work out the volume of the prism.
Give your answer correct to 3 significant figures.

..... cm^3

(Total for Question 9 is 5 marks)

6 The diagram shows a prism.

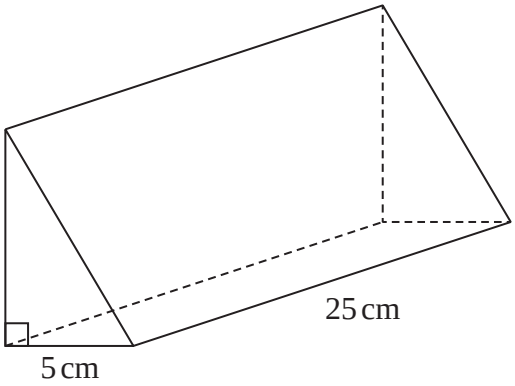

The cross section of the prism is a right-angled triangle.
The base of the triangle has length 5 cm

The prism has length 25 cm
The prism has volume 750 cm^3

Work out the height of the prism.

..... cm

(Total for Question 6 is 3 marks)

7 The diagram shows a cube with edges of length x cm and a sphere of radius 3 cm.

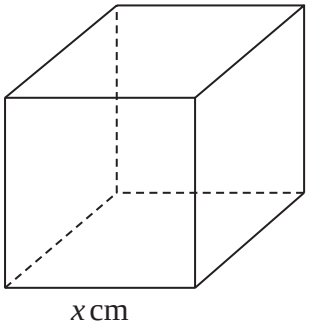

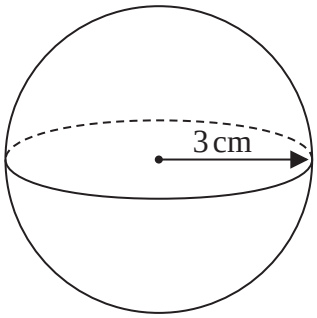

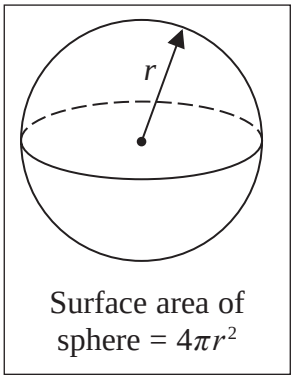

The surface area of the cube is equal to the surface area of the sphere.

Show that $x = \sqrt{k\pi}$ where k is an integer.

(Total for Question 7 is 4 marks)

19 **A**, **B** and **C** are three spheres.

The volume of sphere **A** is $125\,cm^3$
The volume of sphere **B** is $27\,cm^3$

The ratio of the radius of sphere **B** to the radius of sphere **C** is $1:2$

Work out the ratio of the surface area of sphere **A** to the surface area of sphere **C**.

.....

(Total for Question 19 is 3 marks)

1 The scatter graph shows information about the volume of traffic and the carbon monoxide level at a point on a road each day for 22 days.

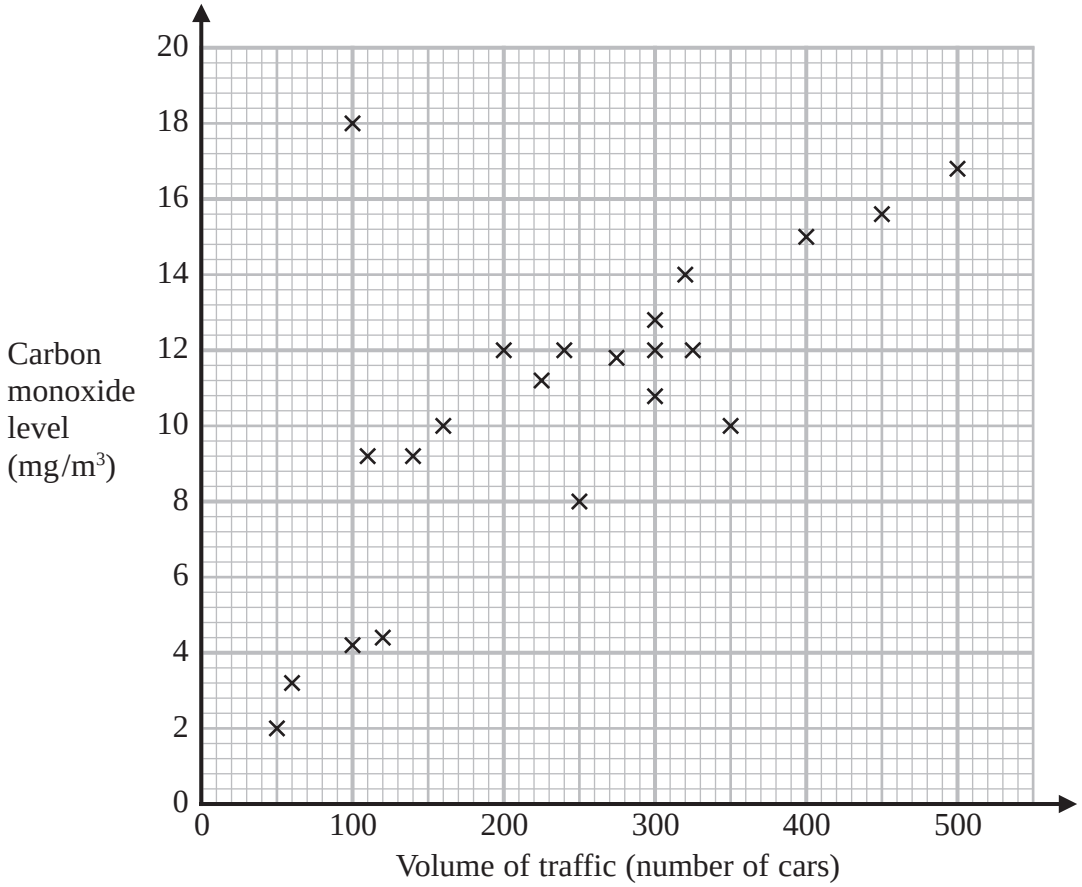

One point is an outlier.

(a) Write down the coordinates of this point.

(..... , ...)

(1)

For another day, 370 cars pass the point on the road.

(b) Estimate the carbon monoxide level for this day.

..... mg/m³

(2)

Alfie says,

"Because there is an outlier, there is no correlation."

(c) Is Alfie correct?
You must give a reason for your answer.

.....

.....

.....

(1)

(Total for Question 1 is 4 marks)

15 The graph gives the volume of water, in litres, in a container at time t seconds after the water started to flow out of the container.

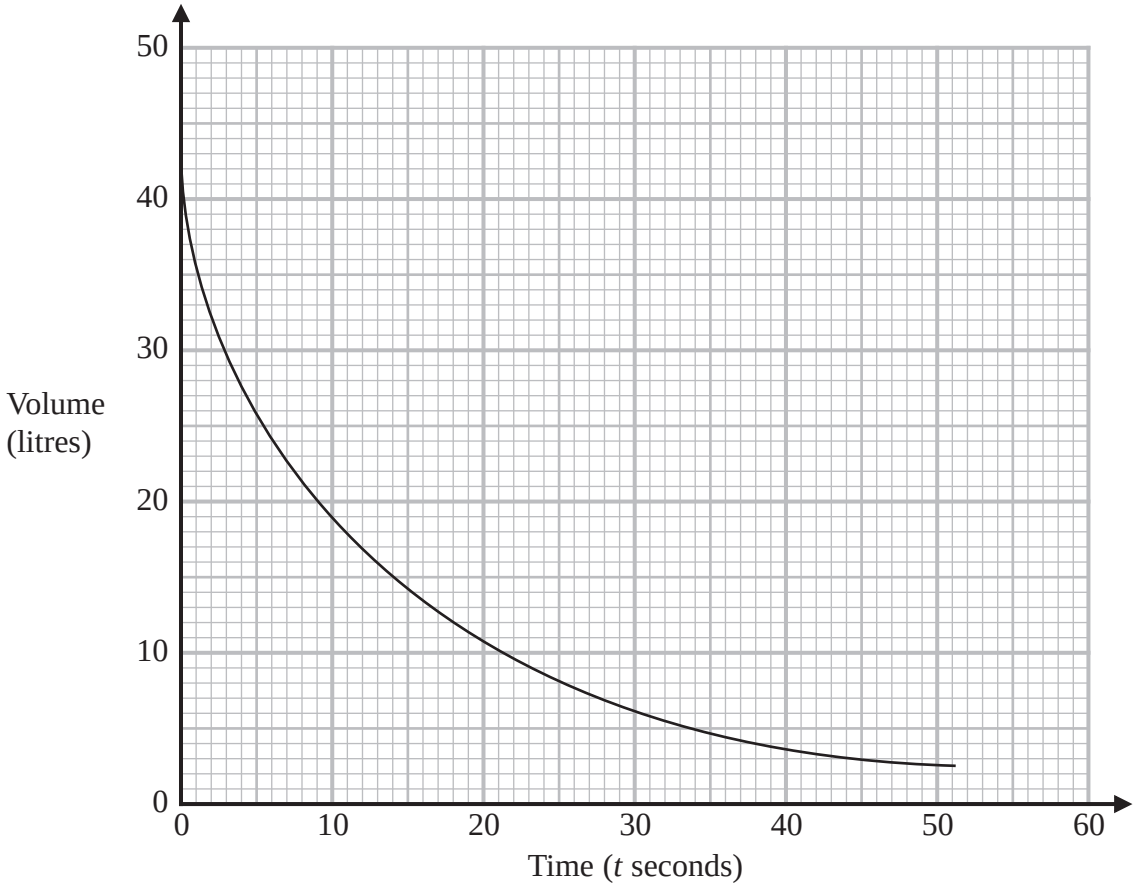

Using the graph, work out an estimate for the rate at which the water is flowing out of the container when $t = 12$
You must show your working.

..... litres per second

(Total for Question 15 is 3 marks)

7 Here are two cubes, **A** and **B**.

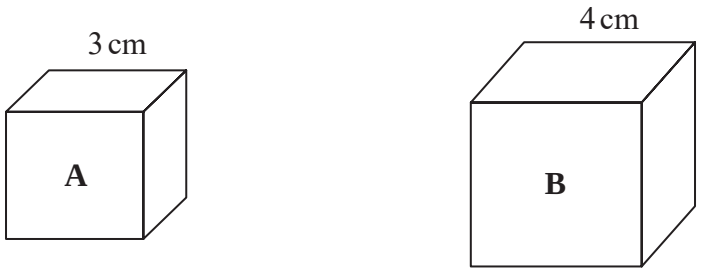

Cube **A** has a mass of 81 g.

Cube **B** has a mass of 128 g.

Work out

the density of cube **A** : the density of cube **B**

Give your answer in the form $a : b$, where a and b are integers.

.....

(Total for Question 7 is 3 marks)

9 A cube is placed on top of a cuboid, as shown in the diagram, to form a solid.

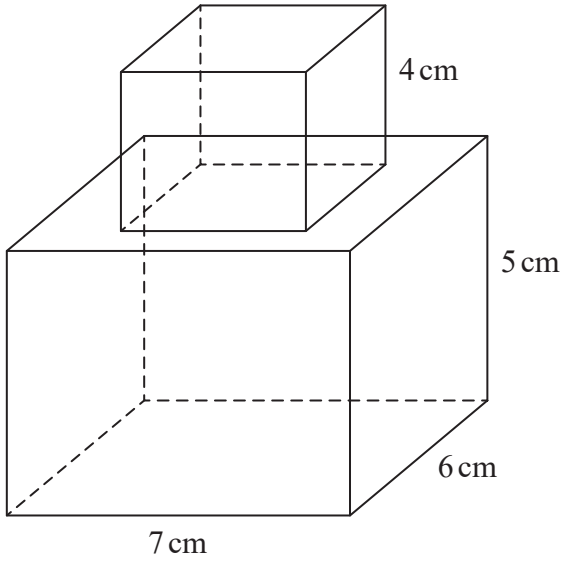

The cube has edges of length 4 cm.
The cuboid has dimensions 7 cm by 6 cm by 5 cm.

Work out the total surface area of the solid.

..... cm^2

(Total for Question 9 is 3 marks)

17 A solid cone is joined to a solid hemisphere to make the solid **T** shown below.

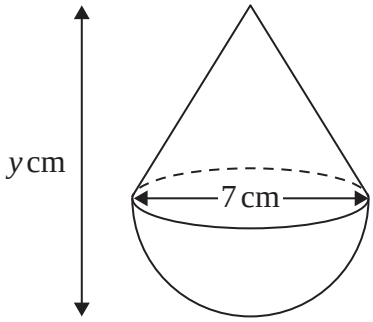

Volume of sphere = $\frac{4}{3}\pi r^3$

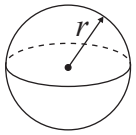

Volume of cone = $\frac{1}{3}\pi r^2 h$

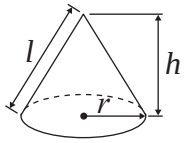

The diameter of the base of the cone is 7 cm.
The diameter of the hemisphere is 7 cm.

The total volume of **T** is $120\pi\,\text{cm}^3$
The total height of **T** is y cm.

(a) Calculate the value of y.
Give your answer correct to 3 significant figures.

$y =$ .....

(4)

The diameter of the base of the cone and the diameter of the hemisphere are both increased by the same amount.
Assuming the total volume of **T** does not change,

(b) explain the effect this would have on your answer to part (a).

.....

.....

.....

(1)

(Total for Question 17 is 5 marks)

24 Here is a solid sphere and a solid cone.

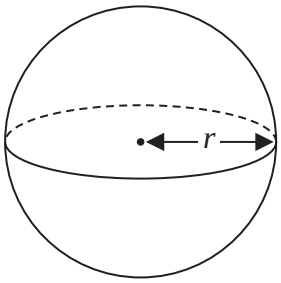

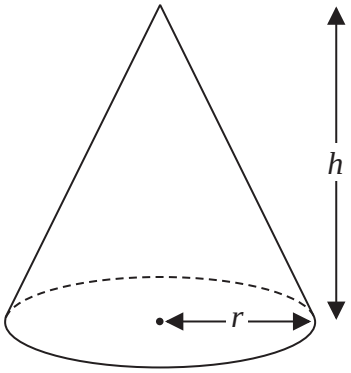

Volume of sphere = $\frac{4}{3}\pi r^3$

Volume of cone = $\frac{1}{3}\pi r^2 h$

All measurements are in cm.

The volume of the sphere is equal to the volume of the cone.

(a) Find $r : h$
Give your answer in its simplest form.

.....

(2)

Here is a different solid sphere and a different solid cone.

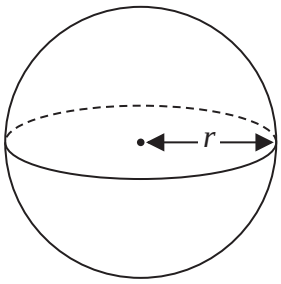

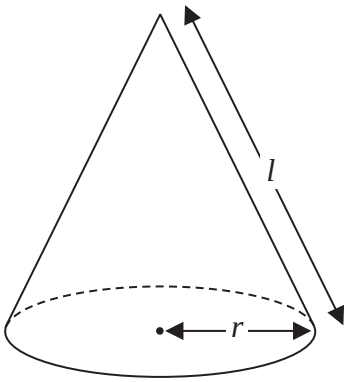

Surface area of sphere = $4\pi r^2$

Curved area of cone = $\pi r l$

All measurements are in cm.

The surface area of the sphere is equal to the **total** surface area of the cone.

(b) Find $r : h$

Give your answer in the form $1 : \sqrt{n}$ where n is an integer.

.....

(4)

(Total for Question 24 is 6 marks)

17 The diagram shows two similar solid triangular prisms, **A** and **B**.

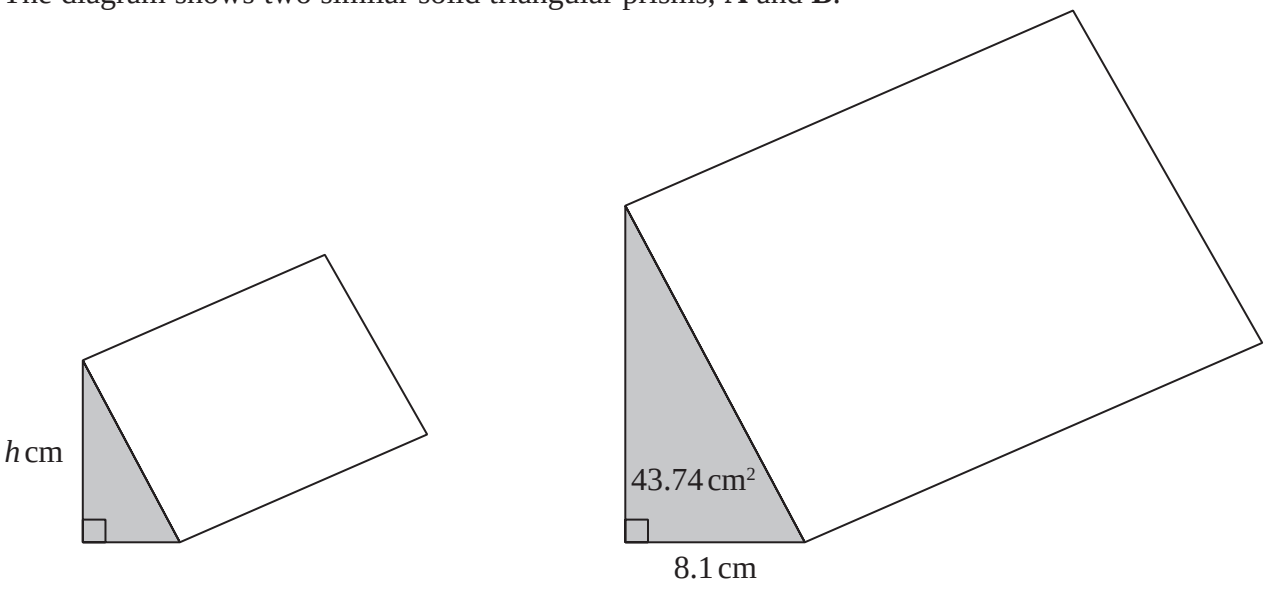

Prism **A**

Prism **B**

The volume of prism **A** is 58.806 cm^3
The volume of prism **B** is 1587.762 cm^3

The cross section of each prism is a right-angled triangle.

For prism **B**
the length of the base of the triangle is 8.1 cm
the area of the triangle is 43.74 cm^2

The height of the triangle for prism **A** is h cm.

Work out the value of h.

h = ...

(Total for Question 17 is 4 marks)

21 The graph below gives the volume, in litres, of water in a container t seconds after the water starts to fill the container.

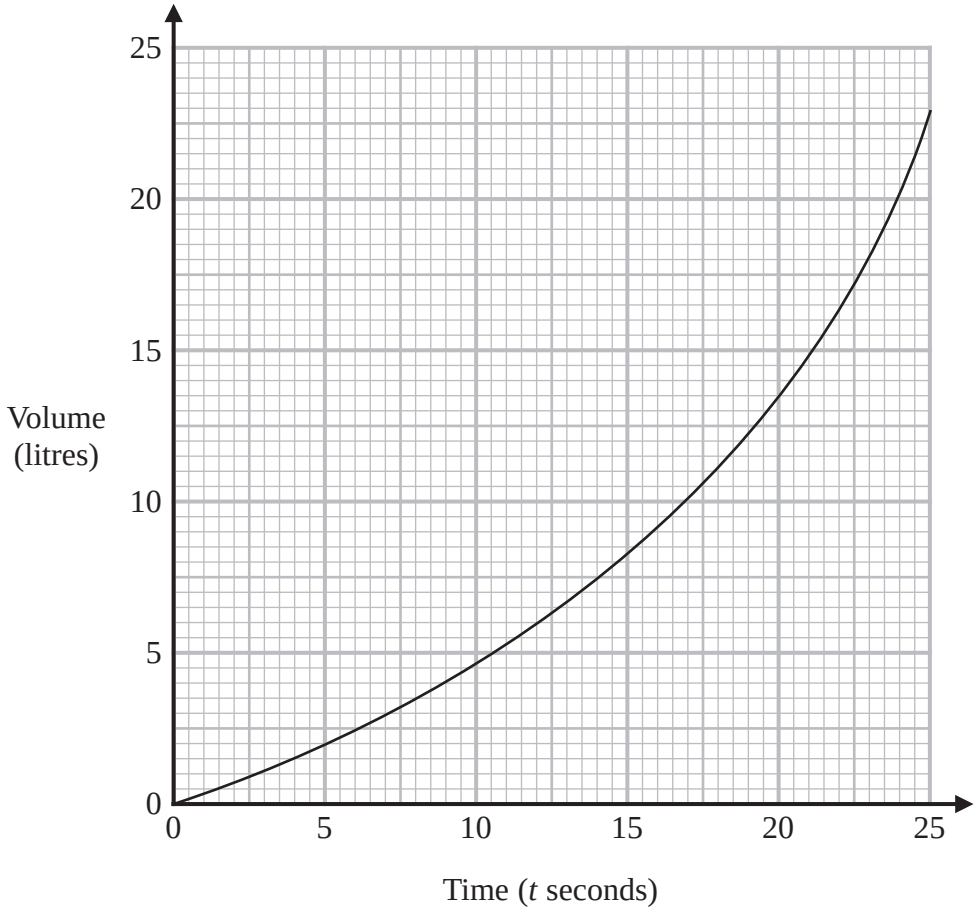

(a) Calculate an estimate for the gradient of the graph when $t = 17.5$
You must show how you get your answer.

.....

(3)

(b) Describe fully what the gradient in part (a) represents.

.....

.....

.....

(1)

(Total for Question 21 is 4 marks)

4 Karina has 4 tanks on her tractor.
Each tank is a cylinder with diameter 80 cm and height 160 cm.

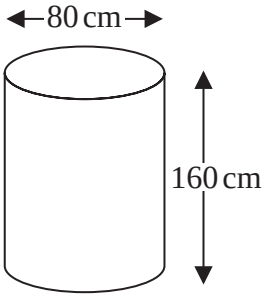

The 4 tanks are to be filled completely with a mixture of fertiliser and water.

The fertiliser has to be mixed with water in the ratio 1 : 100 by volume.
Karina has 32 litres of fertiliser.

1 litre = 1000 cm^3

Has Karina enough fertiliser for the 4 tanks?
You must show how you get your answer.

(Total for Question 4 is 4 marks)

25 The pyramid **P** is formed from two parts made of different materials.

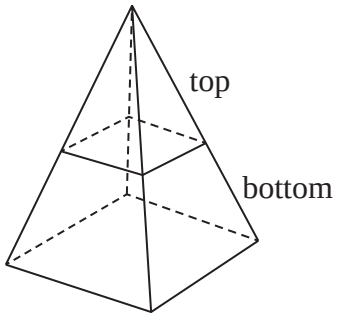

The top part of **P** has a mass of 92.8 g and is made from material with a density of 2.9 g/cm^3
The bottom part of **P** has a mass of 972.8 g
The average density of **P** is 4.7 g/cm^3

Calculate the volume of the top part of **P** as a percentage of the total volume of **P**.
Give your answer correct to 1 decimal place.
You must show all your working.

.....%

(Total for Question 25 is 5 marks)

Question 131

June 2023 | 1MA1/1H | Original Q3

3 A cube has a total surface area of $150\,cm^2$

Work out the volume of the cube.

..... cm^3

(Total for Question 3 is 4 marks)

8 The diagram shows a solid cylinder on a horizontal floor.

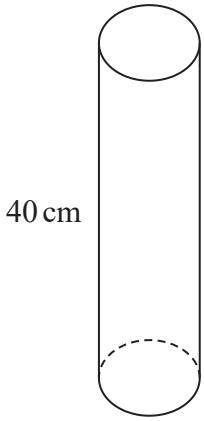

$$\text{pressure} = \frac{\text{force}}{\text{area}}$$

The cylinder has a

volume of $1200\,\text{cm}^3$
height of 40 cm.

The cylinder exerts a force of 90 newtons on the floor.

Work out the pressure on the floor due to the cylinder.

..... newtons/cm^2

(Total for Question 8 is 3 marks)

16 Here is a sphere.

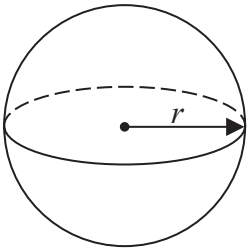

Surface area of sphere = $4\pi r^2$

$\frac{3}{8}$ of the surface area of this sphere is $75\pi\,\text{cm}^2$

Find the diameter of the sphere.
Give your answer in the form $a\sqrt{b}$ where a is an integer and b is a prime number.

..... cm

(Total for Question 16 is 4 marks)

8 A solid cuboid is made of metal.

The metal has a density of $9\,g/cm^3$
The volume of the cuboid is $72\,cm^3$

Work out the mass of the cuboid.

..... g

(Total for Question 8 is 2 marks)

18 A solid frustum is made by removing a small cone from a large cone as shown in the diagram.

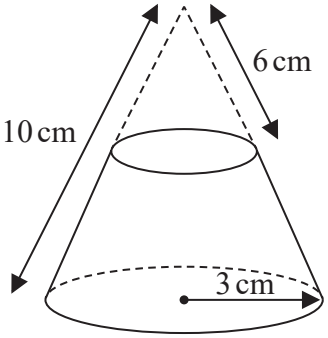

Curved surface area of cone = πrl

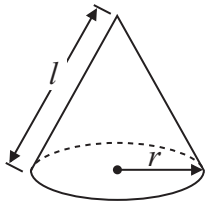

The slant height of the small cone is 6 cm.
The slant height of the large cone is 10 cm.
The radius of the base of the large cone is 3 cm.

Calculate the total surface area of the frustum.
Give your answer correct to 3 significant figures.

..... cm^2

(Total for Question 18 is 5 marks)

Question 136

13 Solid **A** and solid **B** are similar.

The ratio of the height of solid **A** to the height of solid **B** is $2:5$

The volume of solid **A** is $12\,cm^3$

Work out the volume of solid **B**.

..... cm^3

(Total for Question 13 is 3 marks)

8 The diagram shows a solid cube placed on a horizontal table.

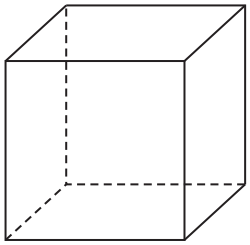

$$\text{pressure} = \frac{\text{force}}{\text{area}}$$

The pressure on the table due to the cube is 3.5 newtons/cm^2
The force exerted by the cube on the table is 504 newtons.

Show that the total surface area of the cube is less than 900 cm^2

(Total for Question 8 is 3 marks)

19

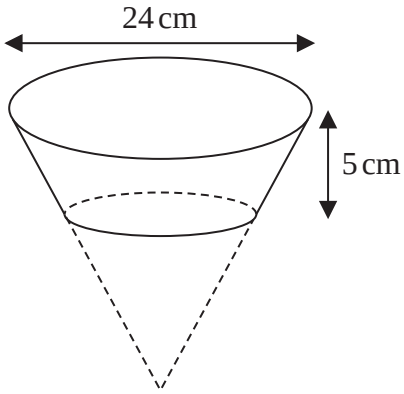

Volume of sphere = $\frac{4}{3}\pi r^3$

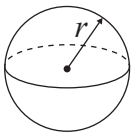

Volume of cone = $\frac{1}{3}\pi r^2 h$

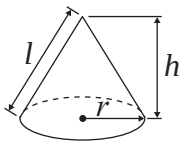

The diagram above shows a frustum **F** of a cone.
The frustum is made by removing a cone with height 10 cm from a solid cone with height 15 cm and base diameter 24 cm.

The solid **S** is made by removing **F** from a solid hemisphere as shown in the diagram below.

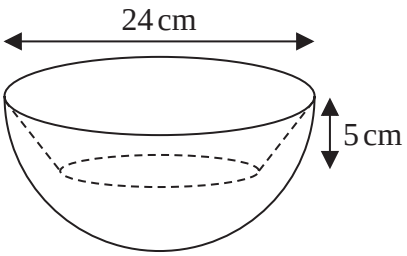

The hemisphere has diameter 24 cm.

Calculate the volume of solid **S**.
Give your answer correct to 3 significant figures.

..... cm^3

(Total for Question 19 is 4 marks)

21 A solid cuboid has a volume of $300\,cm^3$
The cuboid has a total surface area of $370\,cm^2$

The length of the cuboid is 20 cm.
The width of the cuboid is greater than the height of the cuboid.

Work out the height of the cuboid.
You must show all your working.

..... cm

(Total for Question 21 is 5 marks)

17 **L**, **M** and **P** are three similar solid cylinders made from the same material.

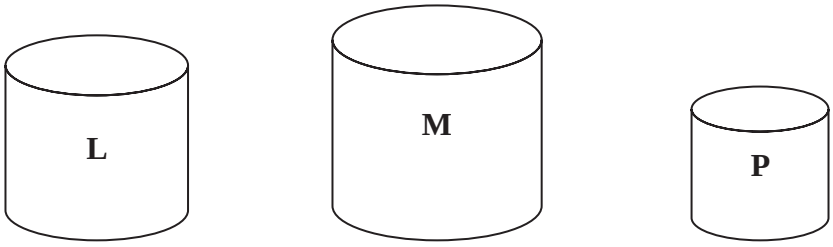

L has a mass of 64 g
M has a mass of 125 g

M has a total surface area of 144 cm^2
P has a total surface area of 16 cm^2

Work out

height of cylinder **L** : height of cylinder **M** : height of cylinder **P**

.....

(Total for Question 17 is 4 marks)

5 Habib has two identical tins.

He puts 600 grams of flour into one of the tins.
The flour fills the tin completely.
The density of the flour is $0.6\,g/cm^3$

Habib puts 600 grams of salt into the other tin.
The salt does **not** fill the tin completely.
The volume of the space in the tin that is **not** filled with salt is $700\,cm^3$

Work out the density of the salt.
You must show all your working.

..... g/cm^3

(Total for Question 5 is 4 marks)

9 The diagram shows a cube and a square-based pyramid.

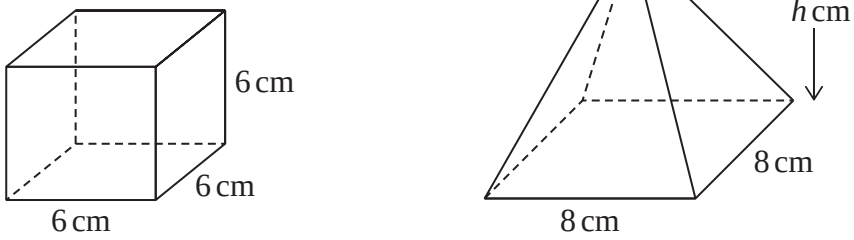

The volume of the cube is equal to the volume of the pyramid.

Work out the perpendicular height, h cm, of the pyramid.

..... cm

(Total for Question 9 is 3 marks)

7 The graph shows the volume of water, V litres, in a tank at time t seconds.

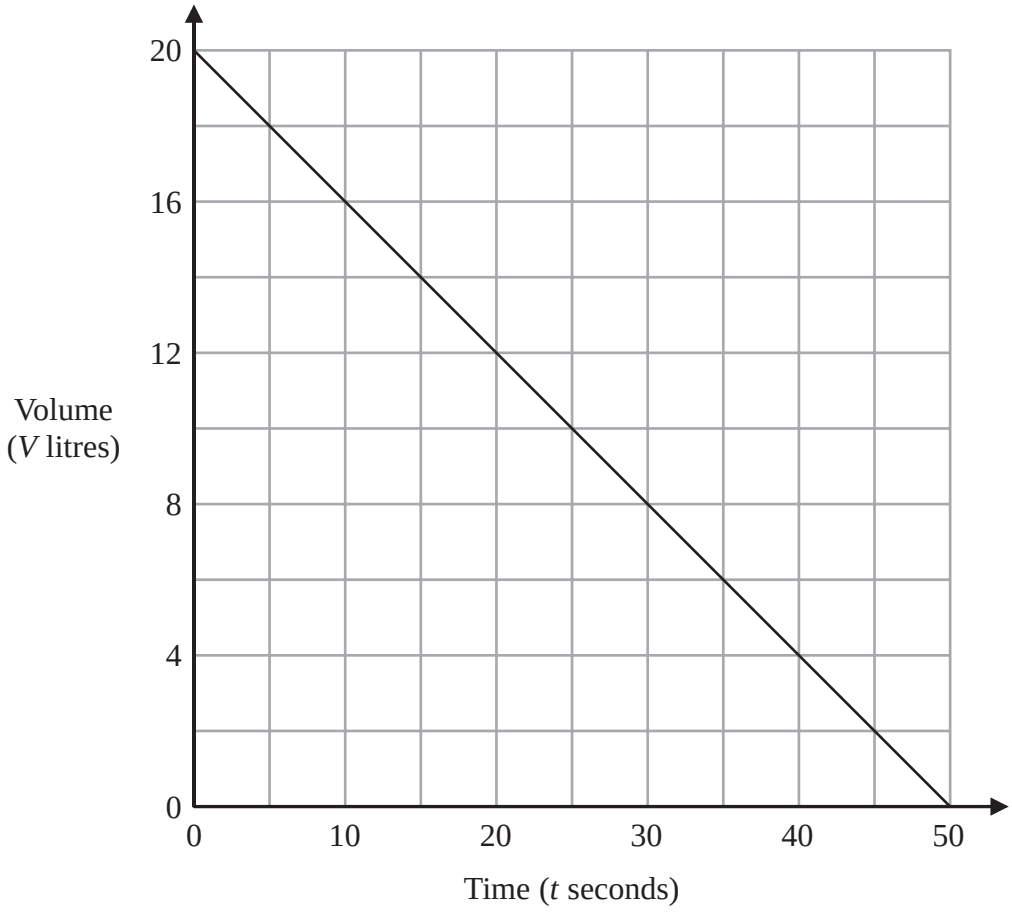

What does the gradient of this graph represent?

.....

.....

.....

(Total for Question 7 is 1 mark)

12 **A**, **B** and **C** are three solid spheres.

Sphere **A** has a volume of $64\,cm^3$
Sphere **B** has a volume of $125\,cm^3$

The radius of sphere **C** is 50% of the radius of sphere **B**.

Work out the ratio of the surface area of sphere **A** to the surface area of sphere **C**.
Give your answer in the form $a:b$ where a and b are integers.

.....

(Total for Question 12 is 4 marks)

13 Here are two cuboids.

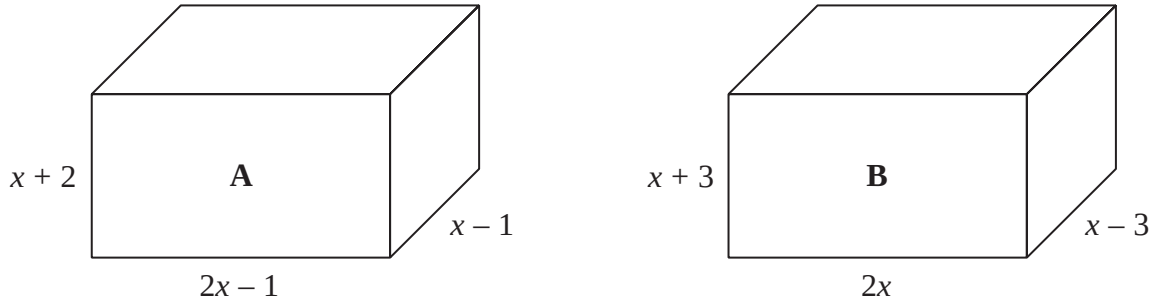

All lengths are measured in centimetres.

The volume of cuboid **A** is 142 cm^3 greater than the volume of cuboid **B**.

Work out the value of x.

$x =$ .....

(Total for Question 13 is 5 marks)

19 The diagram shows a cone.

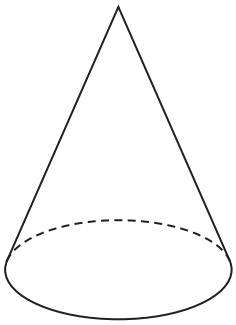

Curved surface area of cone $= \pi rl$

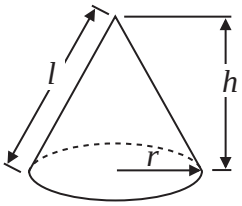

The radius of the base of the cone is $\frac{3}{4}$ of the height of the cone.

The total surface area of the cone is $54\pi\,\text{cm}^2$

Work out the height of the cone.

..... cm

(Total for Question 19 is 4 marks)

8 Metal rods are made from steel with density $8\,g/cm^3$
Each metal rod has a volume of $1500\,cm^3$

The maximum mass of metal rods that can be put on a trolley is 300 kg.

Work out the greatest number of metal rods that can be put on the trolley.

.....

(Total for Question 8 is 3 marks)

16 Two jars are mathematically similar.

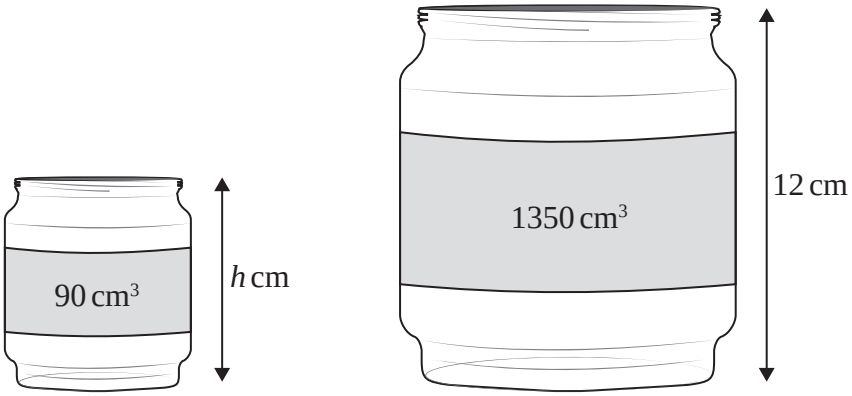

(a) Work out the height, h cm, of the smaller jar.
Give your answer correct to 1 decimal place.

..... cm
(4)

The surface area of the smaller jar is A cm^2
The surface area of the larger jar is pA cm^2

(b) Find the exact value of p.

p = ...
(1)

(Total for Question 16 is 5 marks)

16 The diagram shows a solid shape made from a cylinder and a cone.

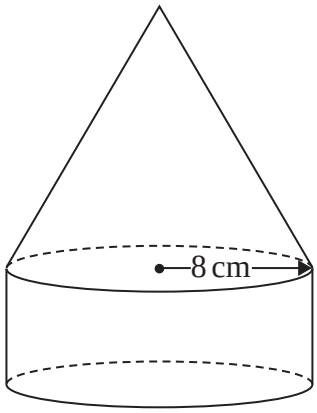

Volume of cone = $\frac{1}{3}\pi r^2 h$

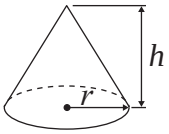

The cone has a base radius of 8 cm.
The cylinder has a radius of 8 cm.

The vertical height of the cone is three times the height of the cylinder.

The volume of the solid shape is $640\pi\,\text{cm}^3$

Work out the vertical height of the cone.
You must show all your working.

..... cm

(Total for Question 16 is 4 marks)