Chhetri Academy

chhetriacademy.com

GCSE MATHS

Algebra

Edexcel 1MA1 | Subtopic collection Topic 16

Changing the subject

Higher tier

Past paper question booklet

56	2003-2025	Higher
question groups	available papers	tier

Before you begin

1. Show working and use units where appropriate.
2. Use extra paper if you need more space.
3. Print at actual size (100%) for measurement questions.

Name _____ **Date** _____

Whole questions are retained for context; some parts cover other points. Legacy sources are labelled.

6. A straight line has equation $y = \frac{1}{2}x + 1$

The point P lies on the straight line.
P has a y-coordinate of 5.

(a) Find the x-coordinate of P.

.....

(2)

(b) Write down the equation of a different straight line that is parallel to $y = \frac{1}{2}x + 1$

.....

(1)

(c) Rearrange $y = \frac{1}{2}x + 1$ to make x the subject.

Leave blank

.....

(2)

12.

Leave blank

Diagram **NOT** accurately drawn

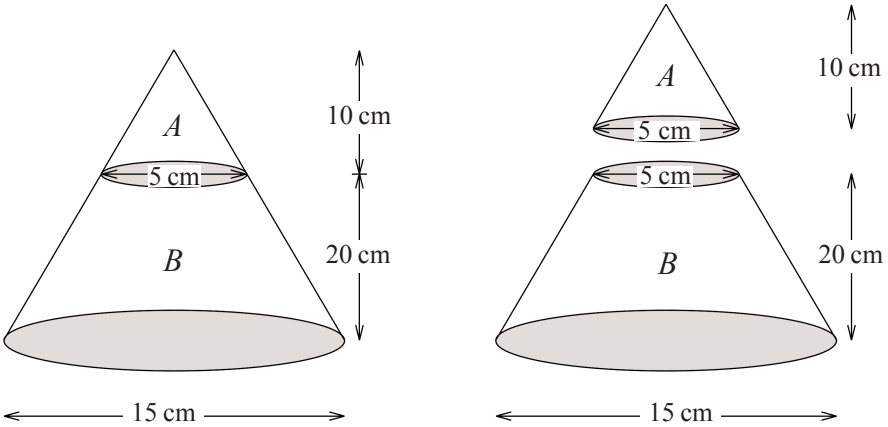

The diagram represents a large cone of height 30 cm and base diameter 15 cm.

The large cone is made by placing a small cone A of height 10 cm and base diameter 5 cm on top of a frustum B.

(a) Calculate the volume of the frustum B.
Give your answer correct to 3 significant figures.

.....cm^3
(3)

Diagram **NOT** accurately drawn

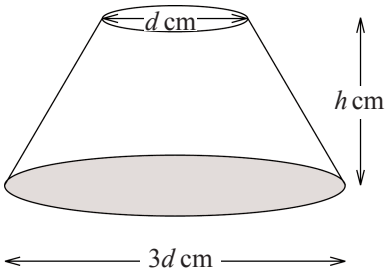

The diagram shows a frustum.
The diameter of the base is $3d$ cm and the diameter of the top is d cm.
The height of the frustum is h cm.

The formula for the curved surface area, S cm^2, of the frustum is

$$S = 2\pi d\sqrt{h^2 + d^2}$$

Leave blank

(b) Rearrange the formula to make h the subject.

$h =$ .....

(3)

Two mathematically similar frustums have heights of 20 cm and 30 cm.

The surface area of the smaller frustum is 450 cm^2.

(c) Calculate the surface area of the larger frustum.

.....cm^2

(2)

Page Total

11. The fraction, p, of an adult's dose of medicine which should be given to a child who weighs w kg is given by the formula

$$p = \frac{3w + 20}{200}$$

(a) Use the formula $p = \frac{3w + 20}{200}$ to find the weight of a child whose dose is the same as an adult's dose.

..... kg
(3)

(b) Make w the subject of the formula $p = \frac{3w + 20}{200}$

$w =$ .....
(3)

$$\frac{3w + 20}{200} = \frac{A}{A + 12}$$

(c) Express A in terms of w.

$A =$ .....
(4)

10.

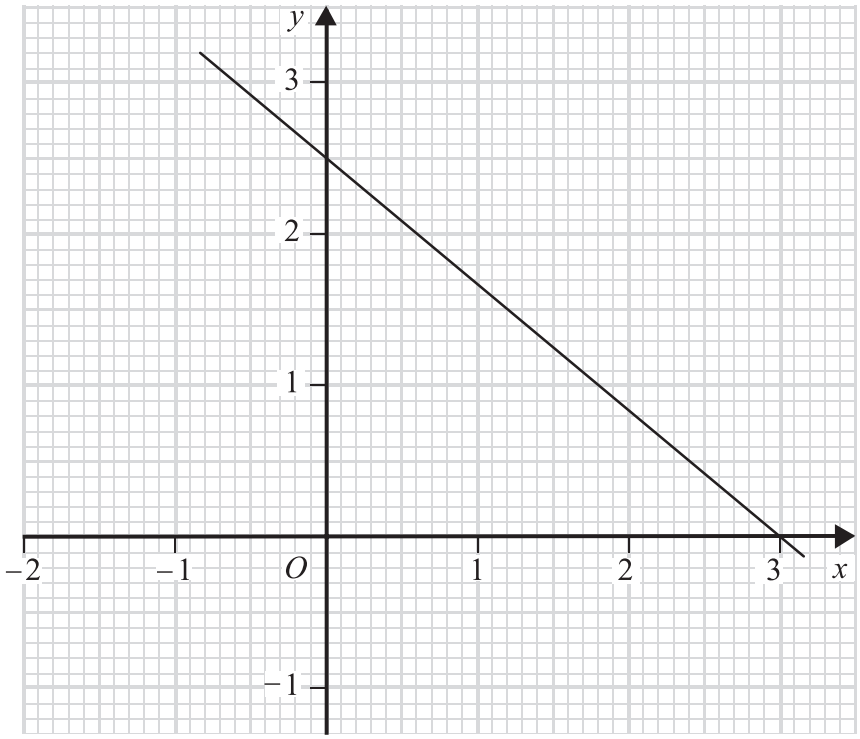

The line with equation $6y + 5x = 15$ is drawn on the grid above.

(a) Rearrange the equation $6y + 5x = 15$ to make y the subject.

$y =$ .....

(2)

(b) The point $(-21, k)$ lies on the line.
Find the value of k.

$k =$ .....

(2)

(c) (i) On the grid, shade the region of points whose coordinates satisfy the four inequalities

$$y > 0, \quad x > 0, \quad 2x < 3, \quad 6y + 5x < 15$$

Label this region ***R***.

P is a point in the region ***R***. The coordinates of P are both integers.

(ii) Write down the coordinates of P.

(..... , ...)

(3)

1. (a) Make t the subject of the formula $v = u + 5t$

$t =$ .....

(2)

(b) Solve $\frac{x-3}{5} = x - 5$

$x =$ .....

(3)

(Total 5 marks)

Q1

12.

$$P = \pi r + 2r + 2a$$

$P = 84$
$r = 6.7$

(a) Work out the value of a.
Give your answer correct to 3 significant figures.

$a =$ .....
(3)

(b) Make r the subject of the formula

$$P = \pi r + 2r + 2a$$

$r =$ .....
(3)

(Total 6 marks)

Q12

11. (a) Make n the subject of the formula $m = 5n - 21$

$n =$ .....

(2)

(b) Make p the subject of the formula $4(p - 2q) = 3p + 2$

$p =$ .....

(3) **Q11**

(Total 5 marks)

blank

9. (a) Factorise completely $3a^2 - 6a$

.....

(2)

(b) Make q the subject of the formula $P = 2q + 10$

$q =$ .....

(2)

(c) Expand and simplify $(y + 3)(y - 4)$

.....

(2)

(d) Factorise $4p^2 - 9q^2$

.....

(2)

Q9

(Total 8 marks)

Blank

25.

$$\frac{1}{u} + \frac{1}{v} = \frac{1}{f}$$

$u = 2\frac{1}{2}$, $v = 3\frac{1}{3}$

(a) Find the value of f.

.....

(3)

(b) Rearrange $\frac{1}{u} + \frac{1}{v} = \frac{1}{f}$

to make u the subject of the formula.

Give your answer in its simplest form.

.....

(2)

Q25

(Total 5 marks)

16. Make q the subject of the formula $5(q + p) = 4 + 8p$
Give your answer in its simplest form.

q = ...

(Total 3 marks)

Q16

Question 11

17. Make A the subject of the formula $r = \sqrt{\frac{A}{3}}$

$A =$ .....

(Total 2 marks)

Blank

Q17

13. Make v the subject of the formula $t = \frac{v}{5} + 2$

Leave blank

$v =$ .....

(Total 2 marks)

Q13

23. Make k the subject of the formula $t = \dfrac{k}{k-2}$

.....

(Total 4 marks)

Q23

17. $y = p - 2qx^2$

$p = -10$
$q = 3$
$x = -5$

(a) Work out the value of y.

.....

(2)

(b) Rearrange $y = p - 2qx^2$

to make x the subject of the formula.

.....

(3)

(Total 5 marks)

Q17

8 (a) Expand $3(2y - 5)$

.....

(1)

(b) Factorise completely $8x^2 + 4xy$

.....

(2)

(c) Make h the subject of the formula

$$t = \frac{gh}{10}$$

$h =$ .....

(2)

(Total for Question 8 is 5 marks)

Question 16

June 2012 | 1MA0/2H | Original Q20 | Legacy

20 Make t the subject of the formula $2(d - t) = 4t + 7$

$t =$ .....

(Total for Question 20 is 3 marks)

16 (a) Make t the subject of the formula

$$2(a + t) = 5t + 7$$

$t =$ .....

(3)

(b) Solve the simultaneous equations

$$3x - 4y = 8$$

$$9x + 5y = -1.5$$

$x =$ .....

$y =$ .....

(3)

(Total for Question 16 is 6 marks)

24 Make t the subject of the formula

$$p = \frac{3 - 2t}{4 + t}$$

.....

(Total for Question 24 is 4 marks)

***25** The diagram shows the triangle PQR.

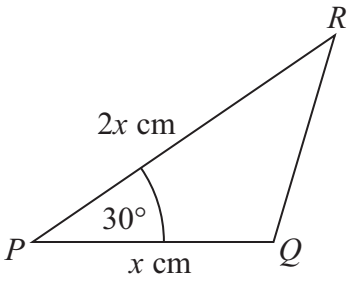

Diagram **NOT** accurately drawn

$PQ = x$ cm
$PR = 2x$ cm
Angle $QPR = 30°$

The area of triangle $PQR = A$ cm^2

Show that $x = \sqrt{2A}$

(Total for Question 25 is 3 marks)

15 Make m the subject of the formula $6m^2 = k$

$m =$ .....

(Total for Question 15 is 2 marks)

14 $A = 4bc$

$A = 100$
$b = 2$

(a) Work out the value of c.

.....

(2)

$$m = \sqrt{\frac{k+1}{4}}$$

(b) Make k the subject of the formula.

.....

(3)

(Total for Question 14 is 5 marks)

Question 22

17 Make x the subject of $4x - 3 = 2(x + y)$

$x =$ .....

(Total for Question 17 is 3 marks)

Question 23

18 Make p the subject of the formula $y = 3p^2 - 4$

.....

(Total for Question 18 is 3 marks)

21 (a) Factorise $4x^2 - 9$

.....

(1)

(b) Make m the subject of

$$g - 3m = am + 5$$

.....

(3)

(Total for Question 21 is 4 marks)

10 (a) Solve $4(y - 7) = 13$

$y =$ .....

(2)

(b) Make t the subject of the formula $P = 4t - 3$

.....

(2)

(Total for Question 10 is 4 marks)

17 Make x the subject of the formula $y = \dfrac{x^2 + 9}{x^2 - 7}$

.....

(Total for Question 17 is 4 marks)

10 (a) Solve $4(y - 7) = 13$

$y =$ .....

(2)

(b) Make t the subject of the formula $P = 4t - 3$

.....

(2)

(Total for Question 10 is 4 marks)

17 Make x the subject of the formula $y = \dfrac{x^2 + 9}{x^2 - 7}$

.....

(Total for Question 17 is 4 marks)

12 You can change temperatures from °F to °C by using the formula

$$C = \frac{5(F - 32)}{9}$$

F is the temperature in °F.
C is the temperature in °C.

The minimum temperature in an elderly person's home should be 20 °C.

Mrs Smith is an elderly person.
The temperature in Mrs Smith's home is 77 °F.

*(a) Decide whether or not the temperature in Mrs Smith's home is lower than the minimum temperature should be.

(3)

(b) Make F the subject of the formula $C = \frac{5(F - 32)}{9}$

.....

(3)

(Total for Question 12 is 6 marks)

22 (a) Simplify fully $\dfrac{2x^2 - 5x + 3}{x^2 + 5x - 6}$

.....

(3)

(b) Make m the subject of

$$\frac{m}{v} - \frac{t}{b} = \frac{m - t}{R}$$

.....

(4)

(Total for Question 22 is 7 marks)

16 Make q the subject of the formula $r = \frac{2q - 4}{3}$

.....

(Total for Question 16 is 3 marks)

Question 32

20 Make a the subject of the formula $p = \dfrac{3a + 5}{4 - a}$

.....

(Total for Question 20 is 4 marks)

16 Make x the subject of the formula $y = \dfrac{3x}{x + 5}$

.....

(Total for Question 16 is 3 marks)

21 (a) Write as a single fraction in its simplest form $\frac{5}{2-x} - \frac{4}{x}$

.....

(3)

(b) Make y the subject of the formula

$$t = \frac{2-3y}{y+2}$$

.....

(4)

(Total for Question 21 is 7 marks)

11 (a) Solve $3x^2 = 147$

.....

(2)

(b) Work out the value of 2^{-3}

.....

(1)

(c) Simplify $(3x^2)^3$

.....

(2)

$w = 4p - 16$

(d) Make p the subject of this formula.

.....

(2)

(Total for Question 11 is 7 marks)

14 Make t the subject of the formula

$$p = \sqrt{\frac{3t}{a}}$$

.....

(Total for Question 14 is 3 marks)

18 (a) Simplify $2a^3b \times 5a^2b^3$

.....

(2)

(b) Make y the subject of the formula $p = \sqrt{\frac{x + y}{5}}$

.....

(3)

(Total for Question 18 is 5 marks)

3 Make w the subject of $d = 2w - 5$

.....

(Total for Question 3 is 2 marks)

13 $h = 3t^2$

(a) Work out the value of h when $t = 5$

.....

(2)

$h = 3t^2$

(b) Work out the value of t when $h = 108$

.....

(2)

(c) Make a the subject of the formula

$$v = u + at$$

.....

(2)

(Total for Question 13 is 6 marks)

15 Make d the subject of the formula

$$p = \frac{d}{e} + f$$

.....

(Total for Question 15 is 2 marks)

17 (a) Simplify $\dfrac{3(x+1)}{(x+1)^2}$

.....

(1)

(b) Solve $\dfrac{15-x}{5} = 3x + 11$

$x =$ .....

(3)

(c) Make m the subject of the formula $v = \sqrt{\dfrac{2E}{m}}$

.....

(3)

(Total for Question 17 is 7 marks)

Question 42

June 2017 | 1MA1/3H | Original Q14

14 (a) Simplify $\dfrac{x^2 - 16}{2x^2 - 5x - 12}$

.....

(3)

(b) Make v the subject of the formula $w = \dfrac{15(t - 2v)}{v}$

.....

(3)

(Total for Question 14 is 6 marks)

18 (a) Show that the equation $x^3 + x = 7$ has a solution between 1 and 2

(2)

(b) Show that the equation $x^3 + x = 7$ can be rearranged to give $x = \sqrt[3]{7 - x}$

(1)

(c) Starting with $x_0 = 2$,
use the iteration formula $x_{n+1} = \sqrt[3]{7 - x_n}$ three times to find an estimate for a solution of $x^3 + x = 7$

.....

(3)

(Total for Question 18 is 6 marks)

2 $v^2 = u^2 + 2as$

$u = 12 \quad a = -3 \quad s = 18$

(a) Work out a value of v.

.....

(2)

(b) Make s the subject of $v^2 = u^2 + 2as$

.....

(2)

(Total for Question 2 is 4 marks)

Question 45

June 2019 | 1MA1/2H | Original Q15

15 Make m the subject of the formula $f = \dfrac{3m + 4}{m - 1}$

.....

(Total for Question 15 is 3 marks)

Question 46

12 $T = \frac{q}{2} + 5$

Here is Spencer's method to make q the subject of the formula.

$2 \times T = q + 5$

$q = 2T - 5$

What mistake did Spencer make in the first line of his method?

.....

.....

.....

(Total for Question 12 is 1 mark)

Question 47

November 2019 | 1MA1/2H | Original Q10

10 Make k the subject of the formula $y = \sqrt{2m - k}$

.....

(Total for Question 10 is 2 marks)

Question 48

November 2020 | 1MA1/1H | Original Q17

17 Make f the subject of the formula $d = \dfrac{3(1 - f)}{f - 4}$

.....

(Total for Question 17 is 4 marks)

2 $T = 4m^2 - 11$

(a) Work out the value of T when $m = -3$

$T =$ .....

(2)

(b) Make p the subject of the formula $d = 3p + 4$

.....

(2)

(Total for Question 2 is 4 marks)

Question 50

November 2022 | 1MA1/3H | Original Q1

1 Make a the subject of the formula $p = 3a - 9$

.....

(Total for Question 1 is 2 marks)

Question 51

17 Make x the subject of the formula $y = \dfrac{4(2x - 7)}{5x + 3}$

.....

(Total for Question 17 is 4 marks)

Question 52

1 (a) Expand and simplify $3(2y - 5) + 7(y + 2)$

.....

(2)

(b) Factorise fully $6x^2 + 15x$

.....

(2)

(c) Make g the subject of the formula $f = 3g + 11$

.....

(2)

(Total for Question 1 is 6 marks)

17 (a) Show that the equation $x^3 + 2x - 6 = 0$ has a solution between $x = 1$ and $x = 2$

(2)

(b) Show that the equation $x^3 + 2x - 6 = 0$ can be rearranged to give $x = \dfrac{6}{x^2 + 2}$

(1)

(c) Starting with $x_0 = 1.45$

use the iteration formula $x_{n+1} = \dfrac{6}{x_n^{\,2} + 2}$ twice to find an estimate for the solution of $x^3 + 2x - 6 = 0$

Give your answer correct to 4 decimal places.

.....

(3)

(Total for Question 17 is 6 marks)

Question 54

10 Make m the subject of $k = p + \frac{2m}{5}$

.....

(Total for Question 10 is 3 marks)

Question 55

15 Make p the subject of the formula $t = \dfrac{2(2p-3)}{5-2p}$

.....

(Total for Question 15 is 4 marks)

2 Ben is trying to make m the subject of $p = \frac{m}{3} + 5$

Here is his working.

$$p - 5 = \frac{m}{3}$$

$$3 \times p - 5 = m$$

$$m = 3p - 5$$

Ben's answer is wrong.

(a) What mistake has Ben made?

.....

.....

.....

(1)

(b) Factorise fully $2x^3y + 4xy^2$

.....

(2)

(Total for Question 2 is 3 marks)