Chhetri Academy

chhetriacademy.com

GCSE MATHS

Geometry and measures

Edexcel 1MA1 | Subtopic collection Topic 45

Plans and elevations

Foundation tier

Past paper question booklet

11	2012-2024	Foundation
question groups	available papers	tier

Before you begin

1. Show working and use units where appropriate.
2. Use extra paper if you need more space.
3. Print at actual size (100%) for measurement questions.

Name _____ **Date** _____

Whole questions are retained for context; some parts cover other points. Legacy sources are labelled.

22 The front elevation and the side elevation of a cuboid are drawn on the grid.

On the grid, draw the plan of the cuboid.

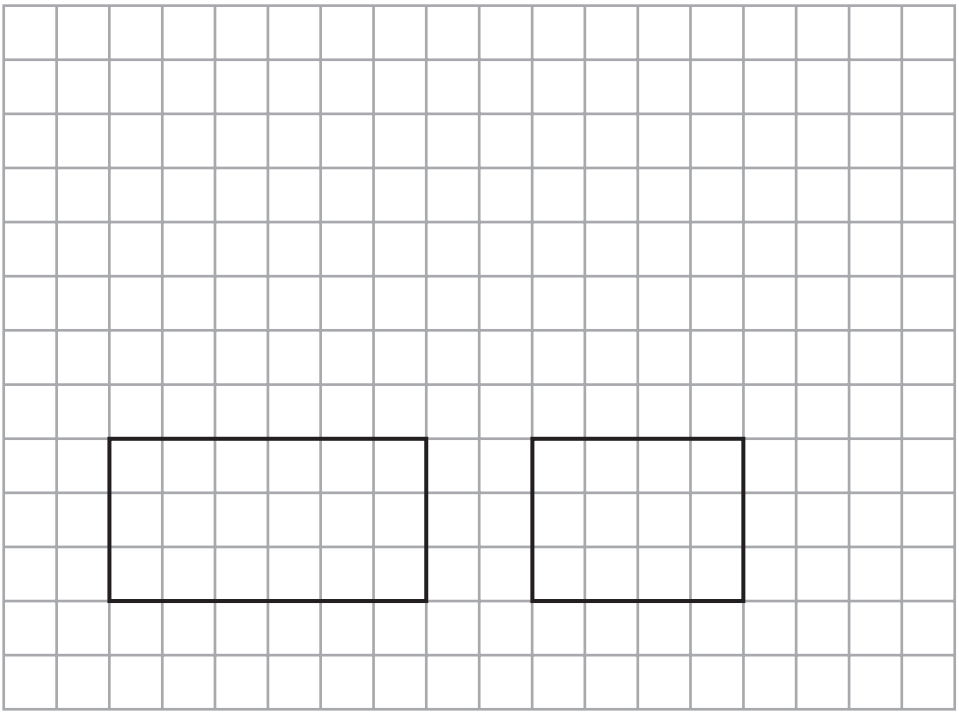

(Total for Question 22 is 2 marks)

19 The side elevation and the front elevation of a cuboid are drawn on the centimetre grid.

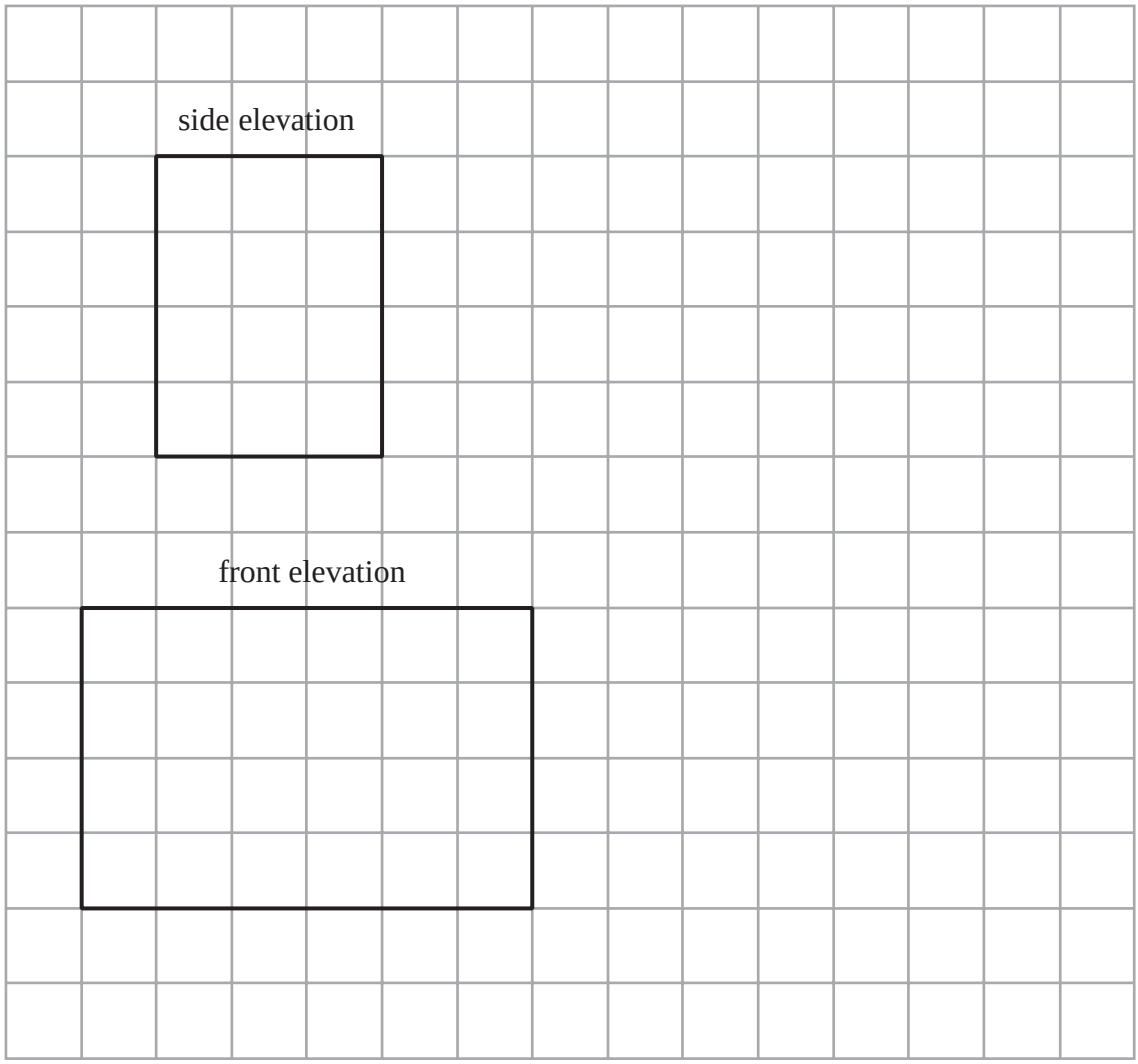

On the grid, draw an accurate plan of the cuboid.

(Total for Question 19 is 2 marks)

9 Here is a scale drawing of the plan of a room.



Scale: 2 cm represents 1 m

Work out the total length around the edge of the room.
Give your answer in metres.

.....metres

(Total for Question 9 is 3 marks)

19 The diagram shows a prism with a cross section in the shape of a trapezium.

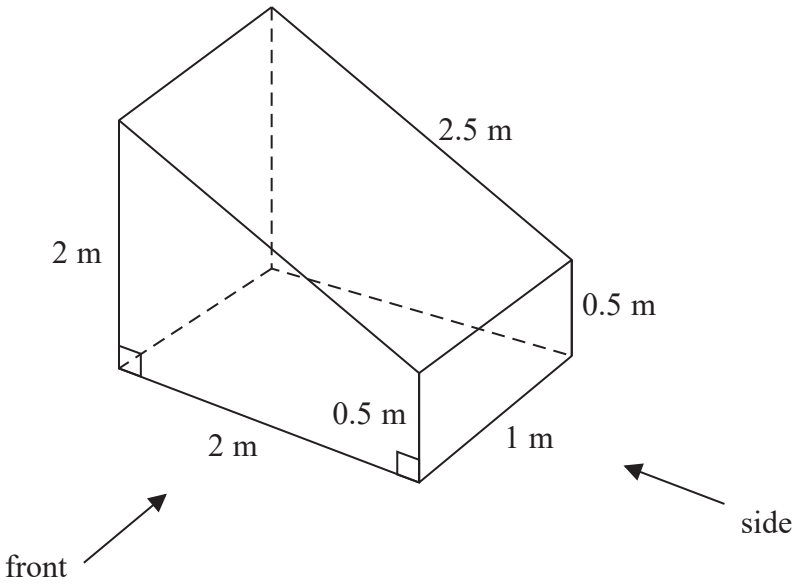

On the centimetre grid below, draw the front elevation and the side elevation of the prism.
Use a scale of 2 cm to 1 m.

(Total for Question 19 is 4 marks)

23 Here is a solid square-based pyramid, *VABCD*.

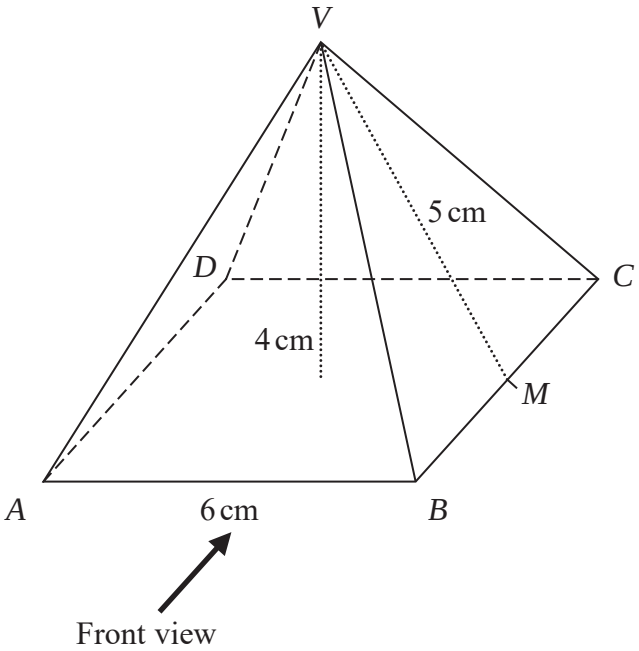

The base of the pyramid is a square of side 6 cm.
The height of the pyramid is 4 cm.
M is the midpoint of *BC* and *VM* = 5 cm.

(a) Draw an accurate front elevation of the pyramid from the direction of the arrow.

(2)

(b) Work out the total surface area of the pyramid.

.....

(4)

(Total for Question 23 is 6 marks)

25 The diagram shows the plan, front elevation and side elevation of a solid shape, drawn on a centimetre grid.

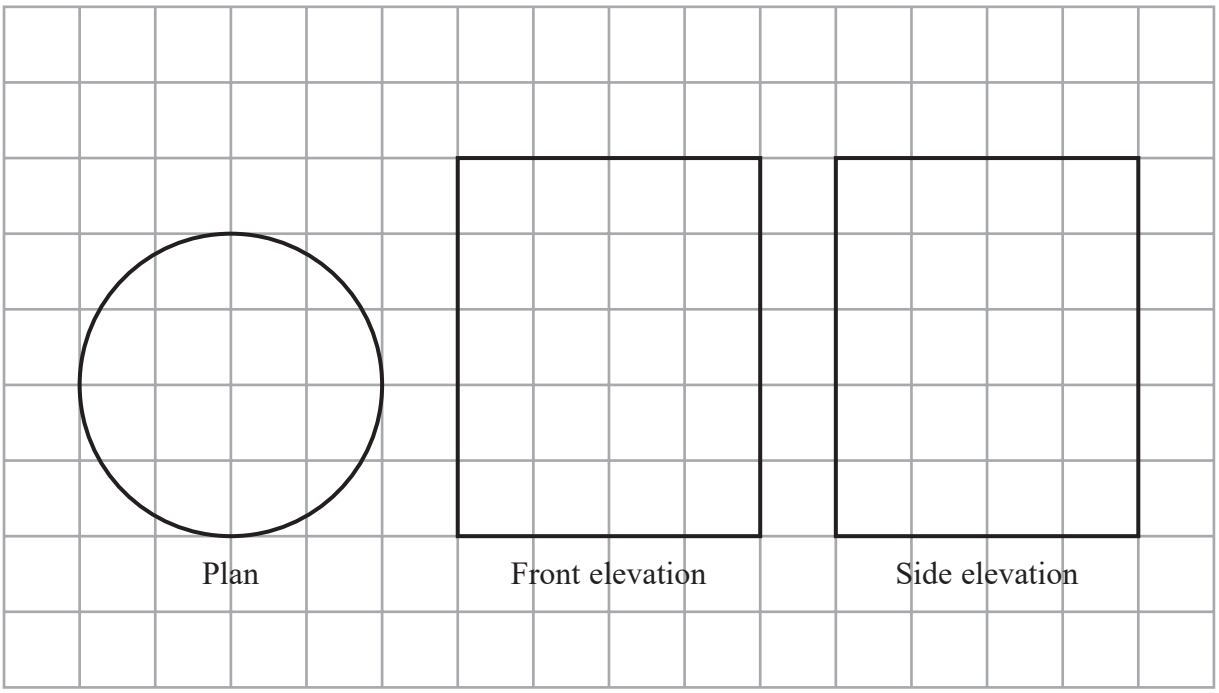

In the space below, draw a sketch of the solid shape.
Give the dimensions of the solid on your sketch.

(Total for Question 25 is 2 marks)

22 Here is a solid made from a square-based pyramid and a cube.
Each edge of the solid has length 6 cm.

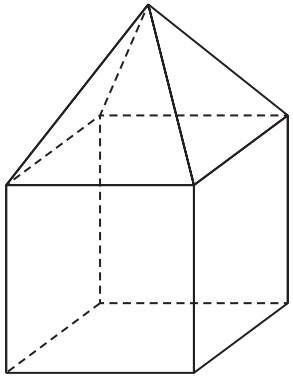

On the centimetre grid, draw the plan of this solid.

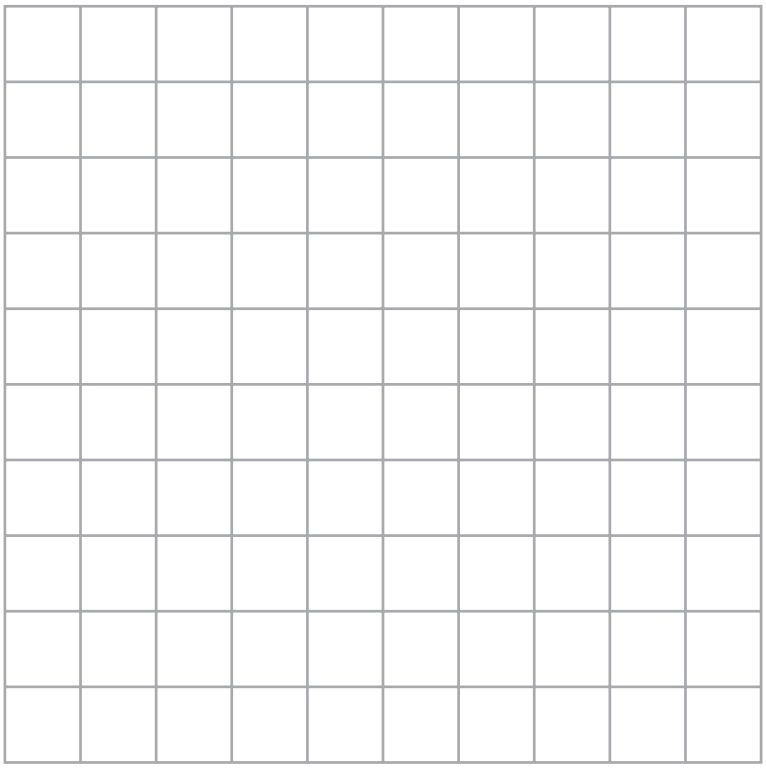

(Total for Question 22 is 2 marks)

22 The centimetre grid shows the plan and the front elevation of a cylinder.

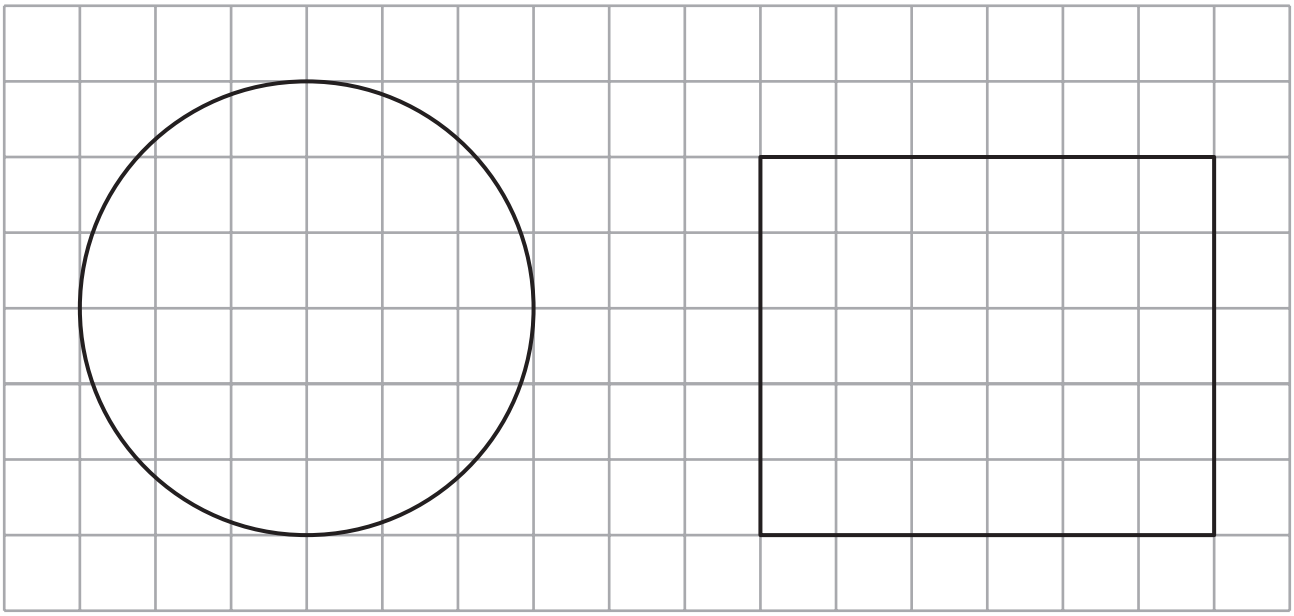

Plan

Front elevation

Work out the volume of the cylinder.
Give your answer in terms of π

..... cm^3

(Total for Question 22 is 3 marks)

19 The front elevation and the plan of a solid are shown on the grid.

On the grid, draw the side elevation of the solid from the direction of the arrow.

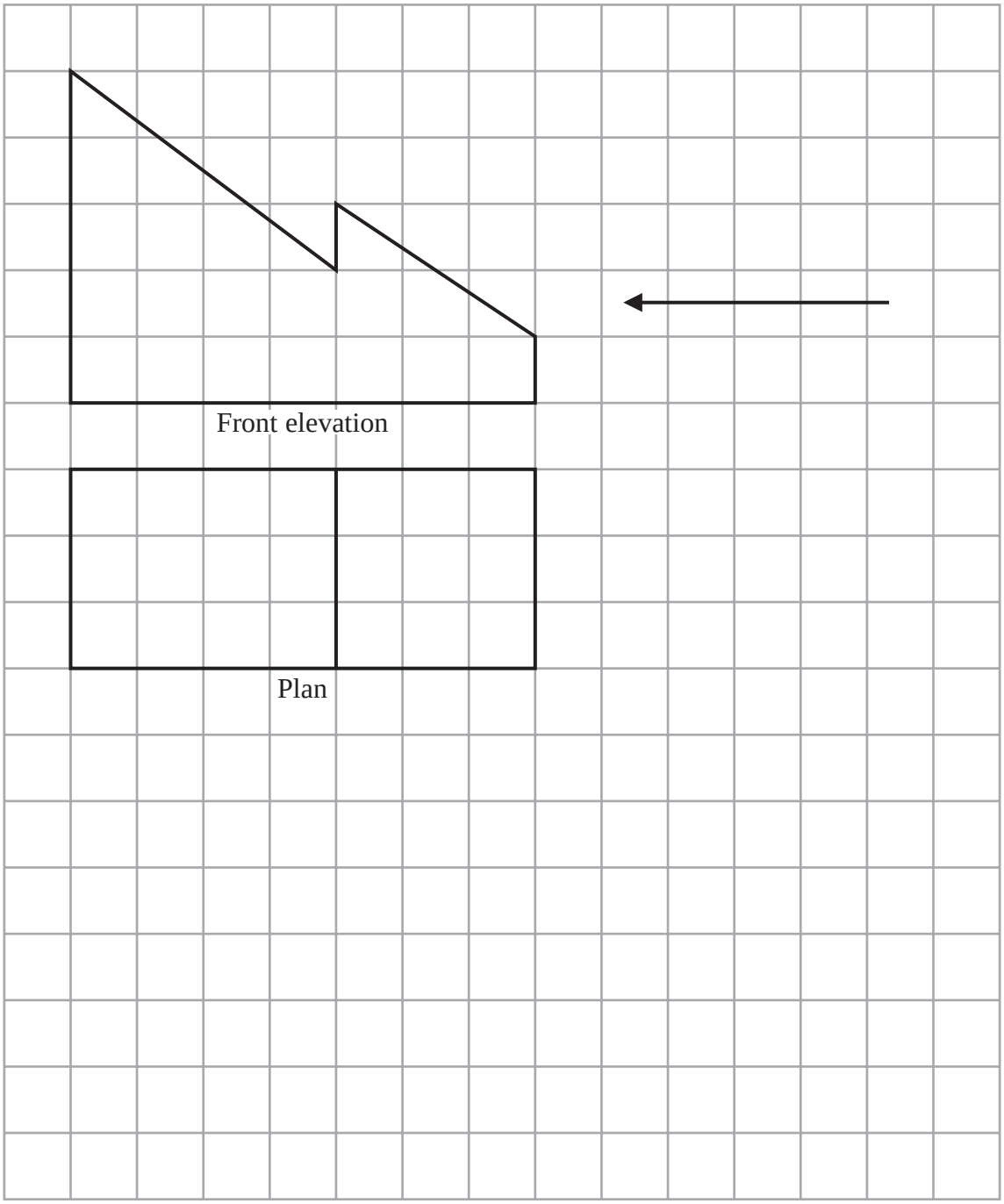

(Total for Question 19 is 2 marks)

19 The front elevation of a cuboid is shown on the centimetre grid below.

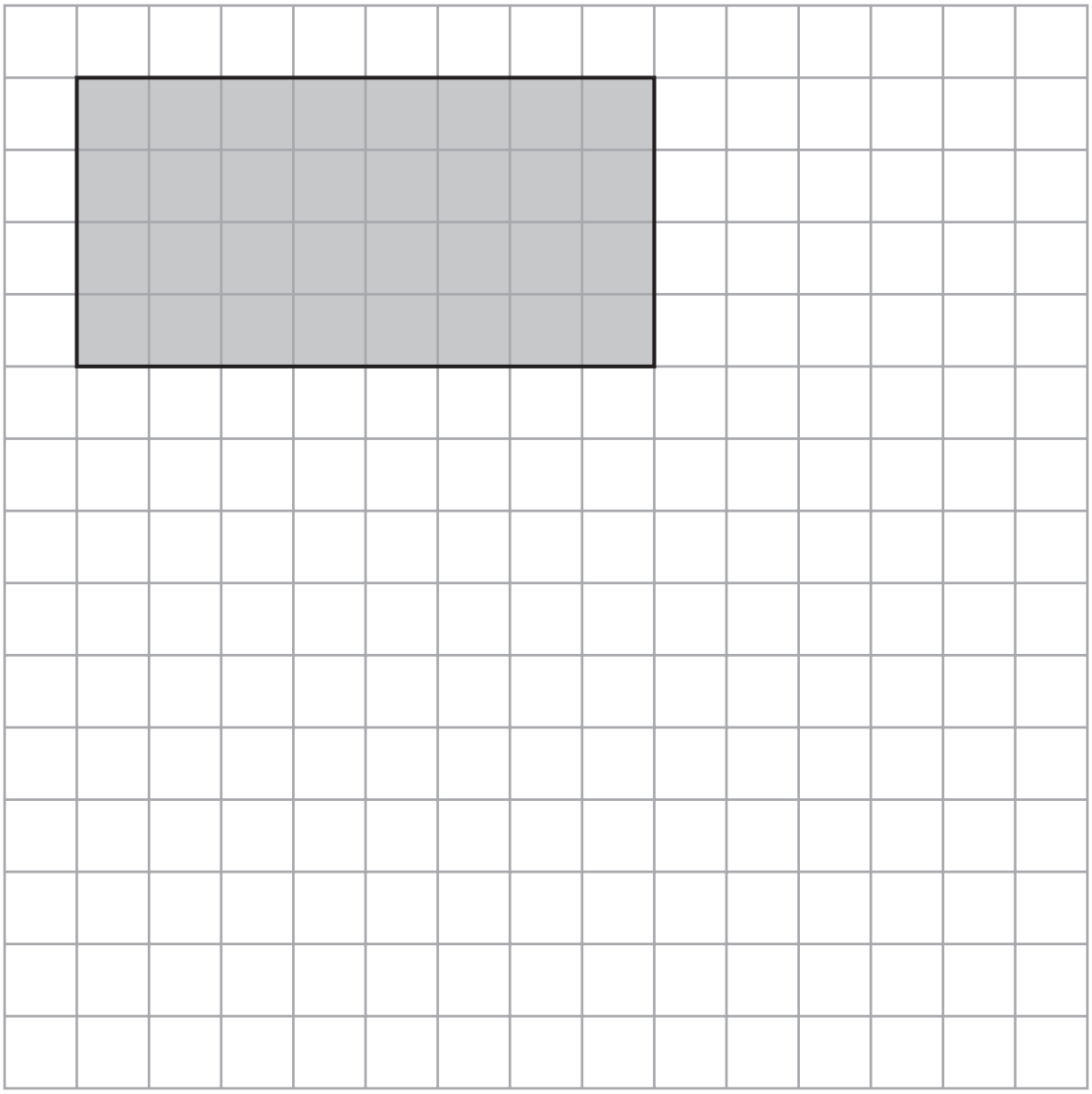

The volume of the cuboid is $224\,cm^3$

On the grid, draw the plan of the cuboid.

(Total for Question 19 is 3 marks)

24 The diagram shows a solid triangular prism.

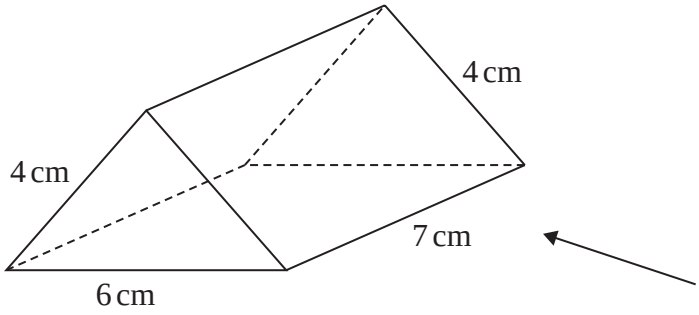

Rana is trying to draw the side elevation of the solid prism from the direction of the arrow.

Here is her answer on a centimetre grid.

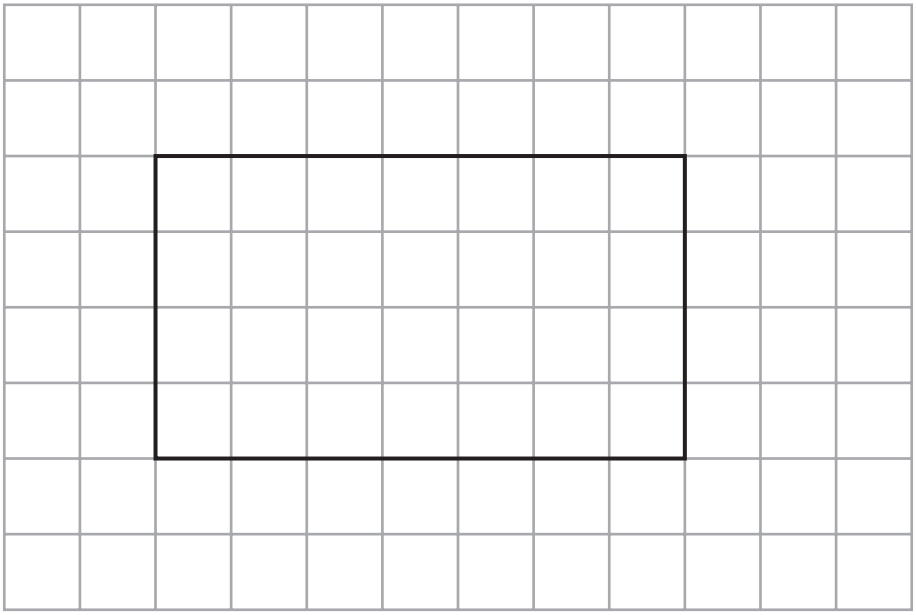

(a) Explain why Rana's side elevation is not correct.

.....

.....

.....

(1)

(b) On the centimetre grid below, draw a plan of the solid prism.

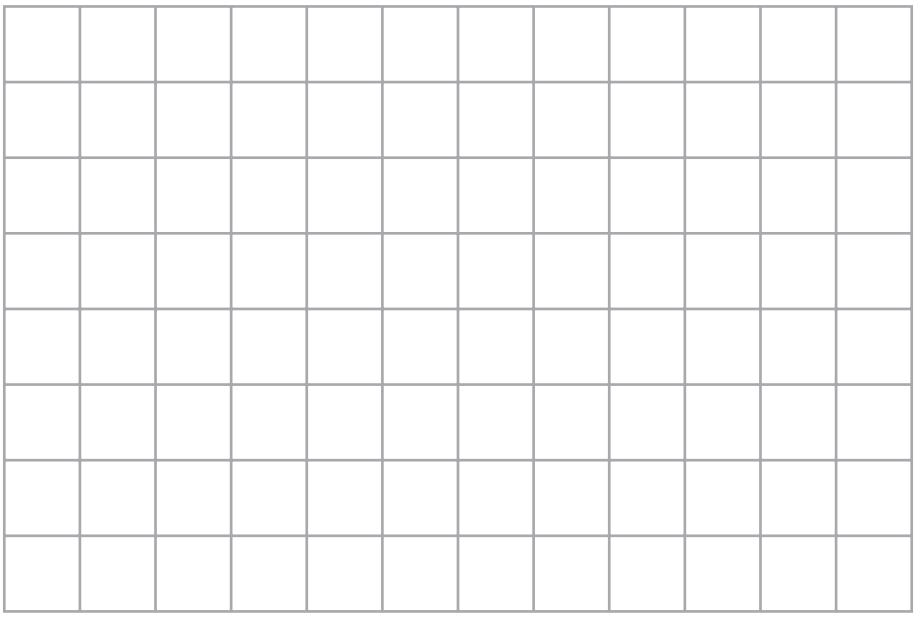

(2)

(Total for Question 24 is 3 marks)