Chhetri Academy

chhetriacademy.com

GCSE COMPUTER SCIENCE

3.3

Edexcel 1CP2 | Specification point 3.3.1

The characteristics and purposes of low-level and high-level programming languages

Untiered

Past paper question booklet

5	2019-2025	Untiered
question groups	available papers	tier

Before you begin

1. Show working and use units where appropriate.
2. Use extra paper if you need more space.
3. Print at actual size (100%) for measurement questions.

Name _____ **Date** _____

Whole questions are retained for context; some parts cover other points. Legacy sources are labelled.

3 A teacher uses tablet computers with students to teach programming online.

(a) Describe how data is stored on solid state devices.

(3)

(b) State **two** functions of utility software.

(2)

1 .....

.....

2 .....

.....

(c) Here is a uniform resource locator.

https://www.pearson.co.uk/secondary/programming/python.html

Draw a circle around the protocol and a rectangle around the domain name.

(2)

(d) Discuss the features of high-level and low-level programming languages.

(6)

(Total for Question 3 = 13 marks)

1 Most programs are written using high-level languages.

(a) Identify **one** term used to describe a compiler.

(1)

- ☒ **A** Interpreter
- ☒ **B** Low-level language
- ☒ **C** Pseudocode
- ☒ **D** Translator

(b) State **two** types of utility software.

(2)

1 .....

2 .....

(c) Complete this sentence.

(2)

Instructions written in a high-level language must be converted to ..... , so that they can be executed by the ..... .

(d) Explain **one** reason why compiled code helps protect intellectual property.

(2)

.....

.....

.....

.....

(Total for Question 1 = 7 marks)

2 Computers

(a) Some low-level programming languages use mnemonics.

(i) State the purpose of a mnemonic.

(1)

.....

.....

(ii) State the type of low-level programming language that uses mnemonics.

(1)

.....

(iii) Mnemonics are one characteristic of some low-level languages.
Describe **one other** characteristic of a low-level language.

(2)

.....

.....

.....

.....

(iv) State the name of the high-level programming language translator that executes a line of code immediately after translating it.

(1)

.....

(b) State the **two** items held in RAM according to the von Neumann architecture.

(2)

1 .....

2 .....

(c) Data can be stored in different ways.

(i) Describe how data is stored on optical media.

(2)

.....

.....

.....

.....

(ii) State the type of secondary storage that stores data as electric charges.

(1)

.....

(d) An embedded computer system is part of a larger machine.

State **two** characteristics of embedded systems that make them different from general purpose computers.

(2)

1 .....

.....

2 .....

.....

(e) Identify **two** reasons for using data compression.

(2)

- ☒ **A** Reduces data transfer times
- ☒ **B** Reduces disk fragmentation
- ☒ **C** Reduces required storage space
- ☒ **D** Reduces the chance of data being hacked
- ☒ **E** Reduces the need for error detection and correction

(f) Robust software must be free from vulnerabilities before it is released to users. Programming bugs are one type of vulnerability.

State **two other** types of vulnerability.

(2)

1 .....

.....

2 .....

.....

(g) Some users are given administrator privileges.

Explain **one** way an operating system allows an administrator to manage users.

(2)

.....

.....

.....

.....

(Total for Question 2 = 18 marks)

4 Computers

(a) A compiler translates source code to machine code. If the source code is edited, it must be recompiled.

Give **two other** characteristics of a compiler.

(2)

1 .....

.....

2 .....

.....

(b) Describe how an operating system organises files and folders.

(2)

.....

.....

.....

.....

.....

.....

(c) Explain **one** way an audit trail helps programmers create robust software.

(2)

.....

.....

.....

.....

(d) Parking at an airport is controlled by computers.

No paper tickets are issued.

Here is an image of the control system at the exit.



The control system uses sensors, a camera and a database.

The barrier lifts if the parking fee has been paid.

Describe what the system does when the exit sensor is activated by a car driving towards it.

(2)

(e) The components of a computer carry out the fetch-decode-execute cycle.

Complete the diagram with:

- the names of **two** buses
- a directional connection from the clock to the correct component.

(3)

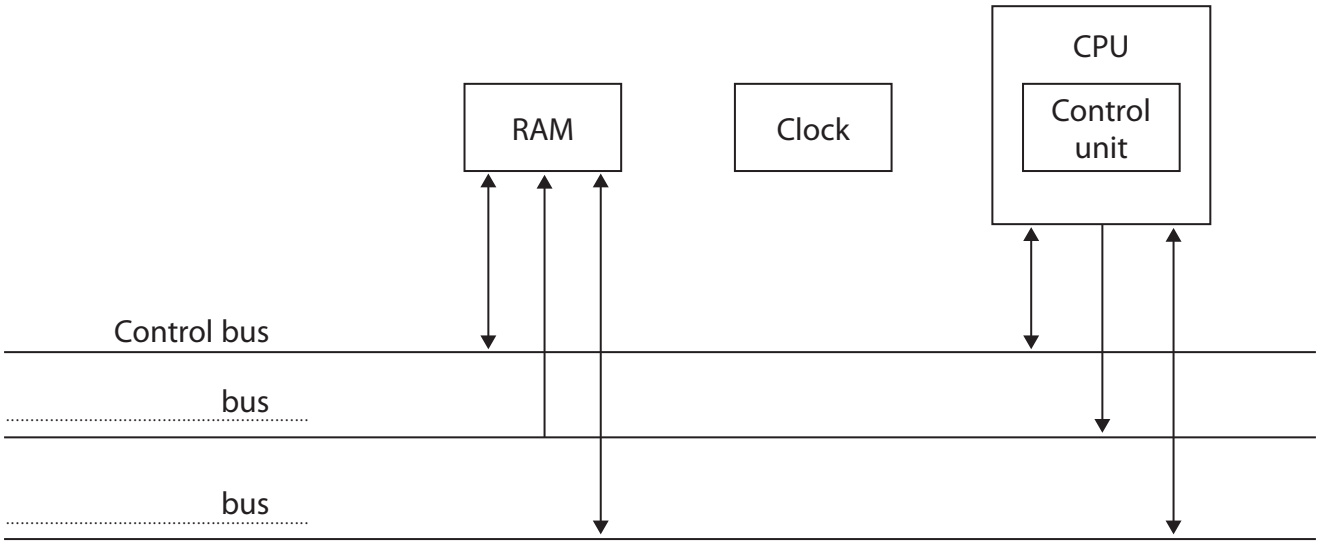

(f) A company is developing a new smartphone.

The smartphone has built-in devices, including a camera and a sound recorder.

The smartphone has applications, including one to edit pictures, one to translate speech to a text file and one for email.

Discuss the characteristics of high-level and low-level programming languages that make them suitable for developing software for the smartphone.

You should consider:

- the built-in devices
- the applications.

(6)

(Total for Question 4 = 17 marks)

2 Computers

(a) A washing machine uses many different embedded systems to wash clothes.



(Source © Pearson Asset Library)

Give **two** functions embedded systems perform in a washing machine.

(2)

1 .....

.....

2 .....

.....

(b) Computers use different types of storage.

(i) Non-volatile storage keeps its content when the power is turned off.

Give **one other** reason why computers use non-volatile storage.

(1)

(ii) State the type of secondary storage media that stores data as a sequence of pits and lands.

(1)

(c) Programmers write code.

(i) Describe how an interpreter translates high-level code.

(2)

(ii) Assembly language is a low-level programming language.

Give **two** characteristics of assembly language.

(2)

1

2

(iii) Software development teams use different methods to produce robust code.

Name the method that records code changes, who made them and when.

(1)

(d) One role of the operating system is to allocate memory to processes.

Describe how the operating system makes use of virtual memory when there is a shortage of main memory.

(2)

(e) File repair is a type of utility software.

Explain **one** reason why file repair software is needed.

(2)

(f) Here is a diagram of a central processing unit.

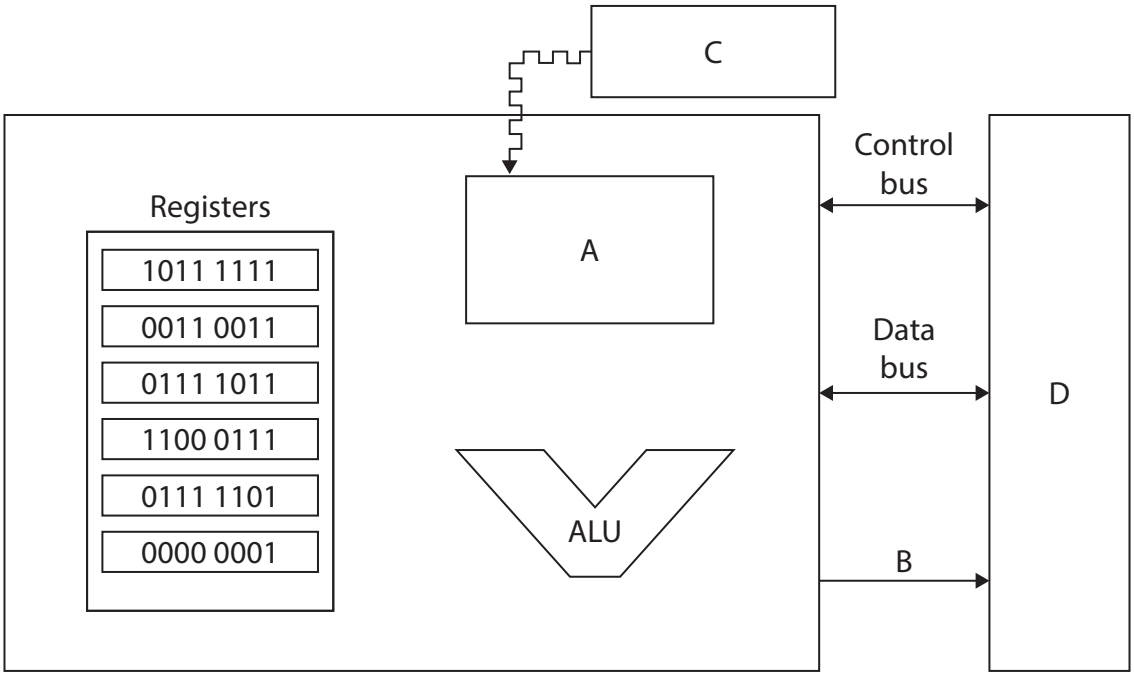

Complete the table with the name for the labelled components.

(4)

Label	Component
A	
B	
C	
D	

(Total for Question 2 = 17 marks)