Chhetri Academy
chhetriacademy.com

GCSE COMPUTER SCIENCE

3.3

Edexcel 1CP2 | Specification point 3.3.1

The characteristics and purposes of low-level and high-level programming languages

Untiered

Answers and examiner comments

5	2019-2025	Untiered
question groups	available papers	tier

Using this booklet

1. Answer numbers match the companion question booklet.
2. Follow the original question number on marking tables.
3. Examiner comments are included where available.

Name _____ **Date** _____

Some entries use full source marking material in an appendix. Any unavailable mark schemes are identified beside the relevant answer.

Question Number	Answer	Additional Guidance	Mark
3(a)	A description to include **three** from: ● NAND (memory) ● If a row/column/set of transistors conduct current / are open/charged, then this represents a 1 ● If row/column/set transistors do not conduct current / are closed/uncharged, then this represents a 0 ● Arranged in a grid (columns/rows) ● At row/column intersections, two transistors (control gate and floating gate) create a 'cell' ● By applying voltage to the control gate transistors ● Electrons flow onto the floating gate ● Creates a net positive charge that interrupts current flow Accept 'Contain transistors' if mark not already awarded from MP2, MP3, MP5	If the response contains content from mark point 2 or mark point 3 that **refers to the effect of current** on setting the state (0 or 1) of transistors; and contains an expansion to show that the opposite state is possible, then award 2 marks.	**3**

Question Number	Answer	Additional Guidance	Mark
3(b)	Any two from: • Repairing files • Compression • Defragmentation • Back up • Anti-virus / anti-spyware / anti-malware • Firewall • Managing application updates • Format disks/drives • System analysis tools		**2**

Question Number	Answer	Additional Guidance	Mark
3(c)	https://www.pearson.co.uk/secondary/programming/python.html		**2**

Question Number	Answer

3(d)

Indicative content:

HLLs	LLLs
Rich set of instructions for sequencing, selection, repetition, and iteration. supplemented by a library of ready-made functions.	Limited instruction set.
A few lines of code can represent a complex task, such as a loop	There are no complex constructs, so every task, such as an if-statement, has to be made from smaller steps.
Support many different data types, such as string, integer, and Boolean.	There are no data types, such as string and integer.
Variables and data can be used in dynamic ways and created only when needed.	The programmer is responsible for managing all their own data.
One line of high-level language generates several executable instructions.	One line of low-level code maps directly to one execution instruction.
There are usually several different editors available which incorporate syntax checkers.	There may be a limited set of tools available for syntax checking.
There are usually several different development environments which provide debugging tools.	There may be a limited set of tools available for helping to debug programs.
Translation is required by all HLLs	Assembly language requires an assembler and machine code does not require translation at all.
Programmers don't have to know the details of a specific machine architecture to write code in a HLL	Programmers have to know the details of a specific machine architecture to write code in a LLL.
HLL uses English-like command words and is therefore easier for a novice programmer to	Mnemonics; or binary code is harder for a novice programmer to read/write/understand.

	read/write/understand		
	HLLs require more memory space.	LLLs require less memory space.	

Level	Mark	Descriptor
	0	No rewardable content
Level 1	1-2	Basic, independent points are made showing elements of knowledge and understanding of key concepts/principles of computer science. The discussion will contain basic information with little linkage between points made.
Level 2	3-4	Demonstrates adequate knowledge and understanding of key concepts/principles of computer science. The discussion shows some linkages and lines of reasoning with some structure.
Level 3	5-6	Demonstrates comprehensive knowledge and understanding by selecting relevant knowledge and understanding of key concepts/principles of computer science to support discussion being presented. The discussion shows a well-developed, sustained line of reasoning which is clear, coherent and logically structured.

Question Number	Answer	Additional Guidance	Mark
1(a)	D		**1**

Question Number	Answer	Additional Guidance	Mark
1(b)	Any **two** from: • Anti-virus • Anti-spyware • Firewall • File management • File repair/recovery • File conversion • Compression • Defragmentation • Back up	Accept 'anti-malware' if mark not already awarded for Mark point 1/2	**2**

Question Number	Answer	Additional Guidance	Mark
1(c)	Machine code / binary (1) Processor / CPU (1)	Accept 'computer'	**2**

Question Number	Answer	Additional Guidance	Mark
1(d)	An explanation to include **two** linked points such as: • The source code is not available (1) because the compiler converts the code to machine code (1) • Compiled code is not human readable (1) so nobody else can alter it or sell it on (1) • Compiled code is difficult/impossible to reverse engineer (1) so nobody else can alter it or sell it on (1)		**2**

Original question 2

The full source mark scheme begins on page 19. Use the original paper code, tier and question number shown above.

Question Number	Answer	Additional Guidance	Mark
4(a)	Award one mark for any of the following up to a maximum of two marks: • Translates the whole program in one go (1) • Errors are reported at the end of translation (1) • The executable/machine code is architecture specific (1)		(2)

Question Number	Answer	Additional Guidance	Mark
4(b)	Award up to two marks for a linked description, such as: • Uses a hierarchical/tree structure (1) with a root node/directory (1) • Each position on the tree/path (1) is a directory/sub-directory/folder, or file (1) • Each file has a unique path (1) in relation to the root (1)	For both marks, the expansion must follow/associate with the statement.	(2)

Question Number	Answer	Additional Guidance	Mark
4(c)	Award up to two marks for a linked explanation, such as: • An audit trail improves accountability (1) because it keeps track of who makes changes / when changes are made (1) • An audit trail makes going back to an earlier version easier (1) because changes are tracked (1)	For both marks, the expansion must follow/associate with the statement.	(2)

Question Number	Answer	Additional Guidance	Mark
4(d)	Award up to two marks for a linked description, such as: • The **camera** reads the registration plate (1) which is looked up in the **database**/checked in the **database** (to see that the fee has been paid) (1)	For both marks, the expansion must follow/associate with the statement.	(2)

Question Number	Answer	Additional Guidance	Mark
4(e)	Award one mark for each of: • Address bus labelled correctly (1) • Data bus labelled correctly (1) • Unidirectional arrow from clock to control unit (1) 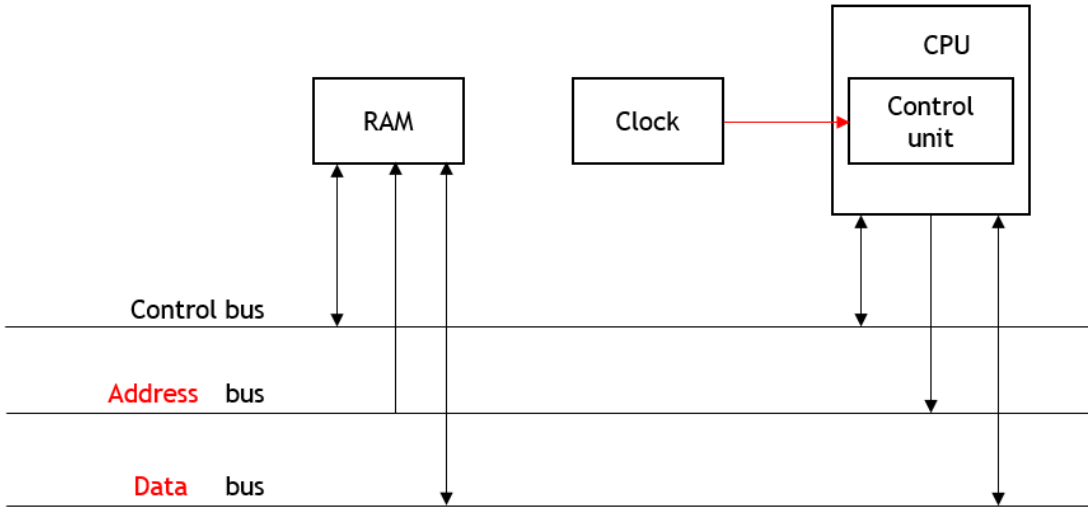	Allow clock connection to CPU box	(3)

Question Number	Answer	Additional Guidance	Mark
4(f)	Indicative content: Built-in devices • A low-level language may be used to write the code for the built-in devices. o Low-level languages are microprocessor dependent, so are designed to work efficiently with a single chipset, like you find in a phone. o Low-level language can manipulate hardware directly, which makes it suitable for writing device drivers, like the receiver for the recorder. o Low-level languages can be optimised to reduce execution time, so are good for a real-time system, like focusing the camera. o Low-level languages also generate smaller executable code than high-level languages so are good for devices with smaller amounts of RAM, like the phone. • A high-level language may be used to write the code for the built-in devices. o A high-level language compiler must exist to generate code for the phone's chipset. o Some high-level languages provide libraries/subprograms which allow direct access to devices. o Some high-level languages allow programmers to write in-line assembly code for microchips. o Some high-level languages have customisable optimisation options for tuning the efficiency (executing time/resource usage) of programs Applications: • A high-level language should be used to write the code for the applications. o Any new applications, written in a high-level language, would be portable to a different version of the phone. o The email application should be written in a high-level language, because tools are available to make development quick.		(6)

	o Any time an application had to interface with the devices, such as sending an email, a library of subprograms would be provided to allow that. o High-level languages have libraries of specialised subprograms to complete advanced actions, such as editing an image.		

Level	Mark	Descriptor
	0	No rewardable content.
Level 1	1–2	Basic, independent points are made, showing elements of understanding of key concepts/principles of computer science. (AO1) The discussion will contain basic information with little linkage between points made or application to the context. (AO2)
Level 2	3–4	Demonstrates adequate understanding of key concepts/principles of computer science. (AO1) The discussion shows some linkages and lines of reasoning with some structure and application to the context. (AO2)
Level 3	5–6	Demonstrates comprehensive understanding of key concepts/principles of computer science to support the discussion being presented. (AO1) The discussion is well developed, with sustained lines of reasoning that are coherent and logically structured, and which clearly apply to the context. (AO2)

Question Number	Answer	Additional Guidance	Mark
2(a)	Award **one** mark for any of the following up to a maximum of **two** marks: • Control water temperature (1) • Select wash cycle (1) • Control timer (1) • Lock door (1) • Display time left (1) • Optimise water usage (1) • Weigh the load/monitor soil levels (1) • Control spin/drum speed (1)	Allow any specific function of a washing machine that could be controlled by an electronic embedded system Do not award wash clothes as this function is given in the question Do not award statements such as 'spin speed', 'temperature', 'cold wash' on their own without indication that these things are being controlled i.e. do not accept copying a label from the picture.	**(2)**

Question Number	Answer	Additional Guidance	Mark
2(b)(i)	Award **one** mark for any of the following: • To store data/files/programs (1) • To backup data/files (in case of loss) (1) • To store BIOS/bootstrap/start up instructions (that are used when the computer is powered on) (1) • Non-volatile storage has higher capacity (than volatile) (1) • Non-volatile storage is more portable (than volatile) (1)		**(1)**

Question Number	Answer	Additional Guidance	Mark
2(b)(ii)	Award **one** mark for: • Optical (1)	Allow CD, DVD, Blu-ray Disc	**(1)**

Question Number	Answer	Additional Guidance	Mark
2(c)(i)	Award **one** mark for any of the following up to a maximum of **two** marks: • The source code is read/translated one line at a time (1) • The code is executed immediately after translation (1) • Errors are reported as soon as they are found (1) • Program translation/execution stops when an error is found (1)	Responses must refer to how the interpreter translates code. Do not accept benefits/drawbacks or comparisons to compilers.	**(2)**

Question Number	Answer	Additional Guidance	Mark
2(c)(ii)	Award **one** mark for any of the following up to a maximum of **two** marks: • Mnemonics/key command words/shortened command words (1) • Hardware/chip/architecture specific / not portable across machines (1) • Manipulates contents of memory/registers/hardware features directly (1) • One assembly language instruction maps to one CPU operation/instruction (1)	Do not award: • hard to learn or no tools • must be translated • is low level Responses must relate to characteristics and not benefits or drawbacks relative to high-level languages.	**(2)**

Question Number	Answer	Additional Guidance	Mark
2(c)(iii)	Award **one** mark for: • **Audit** trail/log (1)	Do not award: • change log • version control Responses must specify **audit**.	**(1)**

Question Number	Answer	Additional Guidance	Mark
2(d)	Award up to **two** marks for a linked description such as: • Processes/programs/instructions/data (not using the CPU) are temporarily moved out of RAM/main memory (1) into secondary storage/on the hard disk/SSD (1) • When it is time for a process to use the CPU and it is stored in secondary storage/on hard disk/SSD (1) it is swapped back into RAM/main memory (1) • RAM/main memory is divided into pages (allocated to each process) (1) and a paging algorithm swaps processes between RAM/main memory and secondary storage/hard disk/SSD (1)	For both marks, the expansion must follow/associate with the statement. Do not award • names of scheduling algorithms • RAM/memory being full	**(2)**

Question Number	Answer	Additional Guidance	Mark
2(e)	Award up to **two** marks for a linked explanation, such as: • If a file is corrupted (1) content can be retrieved (1) • A file is corrupted (1) because of a hardware fault (1) • A file cannot be opened (1) because it is damaged/corrupted (1) • Files can be moved from one area of a disk to another/recovered (1) because part of the disk has been/is corrupted (1) • Reconstruct files/extract parts of a file (1) because part of the disk is corrupted (1)	For both marks, the expansion must follow/associate with the statement.	**(2)**

Question Number	Answer	Additional Guidance	Mark
2(f)	Award **one** mark for each correct cell: A. Control Unit/CU (1) B. Address Bus (1) C. Clock (1) D. Memory/Main Memory/RAM (1)	Allow ROM for RAM	**(4)**

PMT



Mark Scheme (Results)

June 2022

Pearson Edexcel GCSE In Computer Science (1CP2/01) Paper 1: Principles of Computer Science

PMT

Edexcel and BTEC Qualifications

Edexcel and BTEC qualifications are awarded by Pearson, the UK's largest awarding body. We provide a wide range of qualifications including academic, vocational, occupational and specific programmes for employers. For further information visit our qualifications websites at www.edexcel.com or www.btec.co.uk. Alternatively, you can get in touch with us using the details on our contact us page at www.edexcel.com/contactus.

Pearson: helping people progress, everywhere

Pearson aspires to be the world's leading learning company. Our aim is to help everyone progress in their lives through education. We believe in every kind of learning, for all kinds of people, wherever they are in the world. We've been involved in education for over 150 years, and by working across 70 countries, in 100 languages, we have built an international reputation for our commitment to high standards and raising achievement through innovation in education. Find out more about how we can help you and your students at: www.pearson.com/uk

June 2022
Publications Code 1CP2_01_rms_20220825
All the material in this publication is copyright
© Pearson Education Ltd 2022

General Marking Guidance

- All candidates must receive the same treatment. Examiners must mark the first candidate in exactly the same way as they mark the last.
- Mark schemes should be applied positively. Candidates must be rewarded for what they have shown they can do rather than penalised for omissions.
- Examiners should mark according to the mark scheme not according to their perception of where the grade boundaries may lie.
- There is no ceiling on achievement. All marks on the mark scheme should be used appropriately.
- All the marks on the mark scheme are designed to be awarded. Examiners should always award full marks if deserved, i.e. if the answer matches the mark scheme. Examiners should also be prepared to award zero marks if the candidate's response is not worthy of credit according to the mark scheme.
- Where some judgement is required, mark schemes will provide the principles by which marks will be awarded and exemplification may be limited.
- When examiners are in doubt regarding the application of the mark scheme to a candidate's response, the team leader must be consulted.
- Crossed out work should be marked UNLESS the candidate has replaced it with an alternative response.

Question Number	Answer	Additional Guidance	Mark
1(a)(i)	Any **two** from: • Can share files/data • Can share applications/software • Can collaborate • Can share peripherals (printers, speakers) • Can share connectivity (Internet connection, hotspot) • Can access files **from any computer / hot desk** • Central control/management (security, software updates, backup, remote support, users, remote monitoring) • Allows communication (email, social media, video conferencing, online meeting, collaborative games)		**2**

Question Number	Answer	Additional Guidance	Mark
1(a)(ii)	A description such as: • A LAN covers a small (geographic) area / a WAN covers a large (geographic) area (2) • A LAN uses infrastructure owned by one company / a WAN uses third-party infrastructure (2) • A LAN connects individual devices / uses switches (1), whereas a WAN connects LANs / uses gateways (1)	Do not accept 'smaller/larger' in reference to the physical size of the network.	**2**

Question Number	Answer	Additional Guidance	Mark
1(a)(iii)	B 17 080 000 *A 17 080 is not correct because it is 17.08 multiplied by 1000* *C 17 080 000 000 is not correct because it is 17.08 multiplied by 1000^3* *D 17 080 000 000 000 is not correct because it is 17.08 multiplied by 1000^4*	17 080 000 is 17.08 multiplied by 1000^2	**1**

Question Number	Answer	Additional Guidance	Mark
1(a)(iv)	The delay/amount of time between data/signal being sent and it being received	Do not accept reference to delay/lag on its own.	**1**

Question Number	Answer	Additional Guidance	Mark
1(b)i **Clerical**	Any **one** from: • IP (address) • MAC (address)		**1**

Question Number	Answer	Additional Guidance	Mark
1(b)ii	A Data being sent *B is not correct because it is located in the header* *C is not correct because it is located in the header* *D is not correct because it is not located in a packet*		**1**

Question Number	Answer	Additional Guidance	Mark
1(c)	A description to include two from: • Monitors/checks traffic (1) using a set of rules / list of authorised/unauthorised computers/addresses/protocols (1) to decide if data is allowed into or out of the network (1)		**2**

Question Number	Answer	Additional Guidance	Mark
1(d) **Clerical**	Any **one** from: • POP3 • IMAP • SMTP	Accept POP	**1**

Question Number	Answer	Additional Guidance	Mark
1(e)	A linked explanation such as: • All communication could fail (1) because/if the central device fails (1) • It can be difficult/expensive to set up (1) because each device needs a cable to connect to the central device (1) • The number of devices that can be connected is limited (1) because the central device supports a fixed number of connections (1)	For 'central device': • Accept 'router' or 'hub' (as a term to refer to a device that contains a switch). • Accept 'switch' (as this is the correct term to refer to the central device) • Do not accept 'server'	**2**

Question Number	Answer	Additional Guidance	Mark
2(a)i	Any **one** from: • To represent an instruction/command • To make an instruction/command easy to read/write/learn/remember/understand • An instruction in a set of instructions	Accept generic definitions of mnemonic such as: 'To shorten a piece of information so it is easy to remember.'	**1**

Question Number	Answer	Additional Guidance	Mark
2(a)ii **Clerical**	Assembly language		**1**

Question Number	Answer	Additional Guidance	Mark
2(a)iii	A linked description such as: • They are microprocessor/CPU/machine specific (1) so they can manipulate the hardware directly (1) • They can be highly optimised (1) to make efficient use of the hardware/execute more quickly/use minimal memory (1) • Each line of code (1) is one instruction only (1) Award responses that refer to machine code as a low level language, such as: • **Machine code** is written in binary (1) so instructions can be processed **directly** by the CPU / do not need to be translated (1) Award **one** mark for: • Machine code does not need to be translated (1)	Accept: (Assembly language) instructions are assembled (1) to machine code (1)	**2**

Question Number	Answer	Additional Guidance	Mark
2(a)iv **Clerical**	Interpreter		**1**

Question Number	Answer	Additional Guidance	Mark
2(b)	• Data • Instructions		**2**

Question Number	Answer	Additional Guidance	Mark
2(c)i	A description to include **two** from: A laser heats/burns (areas of a disk) (1), which creates lands/pits (1) representing binary / 1s and 0s (1)		**2**

Question Number	Answer	Additional Guidance	Mark
2(c)ii **Clerical**	Solid state / flash *Accept 'SSD' for solid state*		**1**

Question Number	Answer	Additional Guidance	Mark
2(d)	Any **two** from: • Limited processing resources • Low power consumption • Simple/robust operating system • Low cost per unit • Smaller in size • Less storage • Limited user interface	Do not accept: 'Carries out a specific task': This is the opposite of 'general purpose', which is given in the question.	**2**

Question Number	Answer	Additional Guidance	Mark
2(e) **Clerical**	A Reduces data transfer times C Reduces required storage space *B is not correct because parts of a compressed file can still be written to several different places on a disk* *D is not correct as compression does not make data more secure like encryption does* *E is not correct because error detection/correction mechanism are still needed in network packets*		**2**

Question Number	Answer	Additional Guidance	Mark
2(f)	Any **two** from: • Programming language specific vulnerabilities (directly manipulating memory) • Security (vulnerability) • Weak design • Insufficient testing • Bad programming practices (not following standards, using unvalidated 3rd party libraries) • Inadequate validation (that fails to prevent incorrect/inappropriate data input) • Inadequate authentication (that enables hackers to gain unauthorised access) • Sensitive data not encrypted		**2**

Question Number	Answer	Additional Guidance	Mark
2(g)	A linked explanation such as: • Users can be added/deleted (1) so multiple people can use the same computer (1) • Edit user permissions (1) so only specific users can securely access their storage space (1) • Control the amount of resources/storage each user can access (1) so the limited storage on the machine can be shared (1) • Enforce user permissions (1) so only certain users are allowed to install programs / access certain files (1)		**2**

Question Number	Answer	Additional Guidance	Mark
3(a)(i) **Clerical**	1 mark for each nibble: 0011(1) 1001(1)		**2**

Question Number	Answer	Additional Guidance	Mark
3(a)(ii) **Clerical**	1 mark for each digit in the correct location: 2D		**2**

Question Number	Answer	Additional Guidance	Mark
3(a)(iii)	A linked description such as: • Flip all the bits (1) and add one (1) • Copy/keep all the 0s from the right/LSB, up to and including the first 1 (1), then flip the remaining bits (1) • Flip all the bits from the left/MSB (1) up to, but not including, the 1 nearest the right/LSB (1)		**2**

Question Number	Answer	Additional Guidance	Mark
3(a)(iv)	A linked explanation such as: • There are not enough bits (1) to store the result (1) • An overflow occurs (1) because 1 + 1 = 0 with a 1 carry / because the result is more than 255 (1)		**2**

Question Number	Answer	Additional Guidance	Mark
3(b) **Clerical**	Lossy		**1**

Question Number	Answer	Additional Guidance	Mark
3(c)	A description to include **two** from: • A standard • For representing text/characters • Allows data to be interchangeable between computers (from different manufacturers) • Each character is mapped to a unique number/binary equivalent • ASCII (encoding) uses 7/8 bits • There are 128 unique characters (allow 256 for 128)	Award a mark for an example of an ASCII character equivalence e.g. A = 65 as this can be awarded from mark point 4. (A = 01000001 could similarly be awarded.)	**2**

Question Number	Answer	Additional Guidance	Mark
3(d)(i)	Any **one** from: • The number of pixels **per** (square) **inch** is higher • The density of pixels is higher		**1**

Question Number	Answer	Additional Guidance	Mark
3(d)(ii)	Award **one** mark for each number in the correct location for a maximum of 4: • 15 in numerator (1) • 1028 x 640 in numerator (1) • 1024×1024 in denominator (1) • 8 in denominator (1) Example of expression that gains full marks: $\frac{1028 \times 640 \times 15}{1024 \times 1024 \times 8}$	Award equivalent representations of 1024 (2^{10})	**4**

Question Number	Answer	Additional Guidance	Mark
4(a)	A linked explanation such as: • It helps prevent loss of data (1) because malware could deliberately delete data / because data can be deleted/corrupted accidentally (1) • It helps minimise disruption following a system failure (1) because data can be restored (1) • Data can be restored (1) because physical hazards (fire/flood) (can damage storage devices) (1)		**2**

Question Number	Answer	Additional Guidance	Mark
4(b)	Any **two** from: • That they are giving consent • That they can say no / refuse • That they are not denied service, if they say no • What the data is being collected for • What processing will be done on their data/purpose of the processing/how data will be processed • That they can withdraw consent at any time • That the data will be shared (with third parties) • How long it will be stored • That the data will be stored securely		**2**

Question Number	Indicative content	Additional Guidance	Mark
4(c)	Discuss how algorithmic bias can affect the decisions police forces make. **Causes of algorithmic bias** • Machine learning having been trained using insufficient/inappropriate data • Human bias leading to discrimination and a lack of fairness • Poor design of the algorithm **Impacts on individuals and communities of algorithmic bias** • Deploying officers to the wrong areas • Individuals may feel as though they are being monitored/targeted/subjected to unfair treatment as a result of the output of a biased algorithm deploying too many officers / too few officers • Discrimination/equality (e.g. resourcing police more heavily in particular communities) • Feedback loops (if a model predicting crime rates based on historical arrest data is used to prioritise police resources, then arrests in high risk areas could increase further, reinforcing the imbalance) source **Methods available to reduce the risk of algorithmic bias** • Human oversight and 'sense checking' and confidence/error ratings of predictions • Governance (anticipating and managing risks and make sure legal requirements are adhered to) • Auditing to enable identification and mitigation of systematic bias • Open to scrutiny / transparent • Involvement of communities during development • Improve the training data		**6**

Level	Mark	Descriptor
	0	No rewardable content.
Level 1	1–2	Basic, independent points are made, showing elements of understanding of key concepts/principles of computer science. (AO1) The discussion will contain basic information with little linkage between points made or application to the context. (AO2)
Level 2	3–4	Demonstrates adequate understanding of key concepts/principles of computer science. (AO1) The discussion shows some linkages and lines of reasoning with some structure and application to the context. (AO2)
Level 3	5–6	Demonstrates comprehensive understanding of key concepts/principles of computer science to support the discussion being presented. (AO1) The discussion is well developed, with sustained lines of reasoning that are coherent and logically structured, and which clearly apply to the context. (AO2)

PMT

Question Number	Answer	Additional Guidance	Mark
5(a)(i) **Clerical**	Any **one** from: • Array • List		**1**

Question Number	Answer	Additional Guidance	Mark
5(a)(ii) **Clerical**	Yellow		**1**

Question Number	Answer	Additional Guidance	Mark
5(a)(iii) **Clerical**	Abstraction		**1**

Question Number	Answer	Additional Guidance	Mark
5(a)(iv) **Clerical**	Decomposition		**1**

Question Number	Answer	Additional Guidance	Mark
5(b)	A linked description such as: • If the value of the item at the current index position in the array is more than the value of the target (1), no more passes of the loop are required / the loop will exit (1) • If the pass through the loop goes past the expected location of the target value (1), the third condition for the loop to execute will not be met (1) • If the value (of 'theTarget') is exceeded without reaching the end of the array (1) the algorithm will end (1)	Do not accept 'index' in place of 'the value at the index'.	**2**

<table>
<tr><th>Question Number</th><th>Answer</th><th>Additional Guidance</th><th>Mark</th></tr>
<tr><td>5(c)</td><td>One mark for each correct row showing relationship of variable changes.
<table>
<tr><th>count</th><th>accept</th><th>reject</th><th>weight</th><th>Display</th></tr>
<tr><td>0</td><td>0</td><td>0</td><td>0</td><td></td></tr>
<tr><td>1</td><td>1</td><td></td><td>404</td><td></td></tr>
<tr><td>2</td><td></td><td>1</td><td>393</td><td></td></tr>
<tr><td>3</td><td>2</td><td></td><td>395</td><td></td></tr>
<tr><td>4</td><td>3</td><td></td><td>405</td><td></td></tr>
<tr><td></td><td></td><td></td><td></td><td>3 1</td></tr>
</table></td><td>Different versions of trace tables are acceptable.

Blanks can be replaced with contents of previous row.

Final ‘3 1’ can be included on row above.

Ignore formatting of 3 1 in Display column (e.g. accept ‘3,1’)

Allow ‘Enter weight of box:’ in Display column until 3 1 should be displayed.</td><td>6</td></tr>
</table>

Question Number	Answer	Additional Guidance	Mark
5(d)	• Both start and stop terminators present **and** algorithm terminates correctly at the stop terminator (1) • Two separate inputs for two integers (1) [can be in the same input symbol] • Test for equivalence, greater than or less than in one decision box (1) • Different test (for equivalence, greater than, or less than) in separate decision box (1) • Two outputs, labelled Yes and No, for each decision box (1) • Logic of flowchart links to **three** logically valid outputs (1) 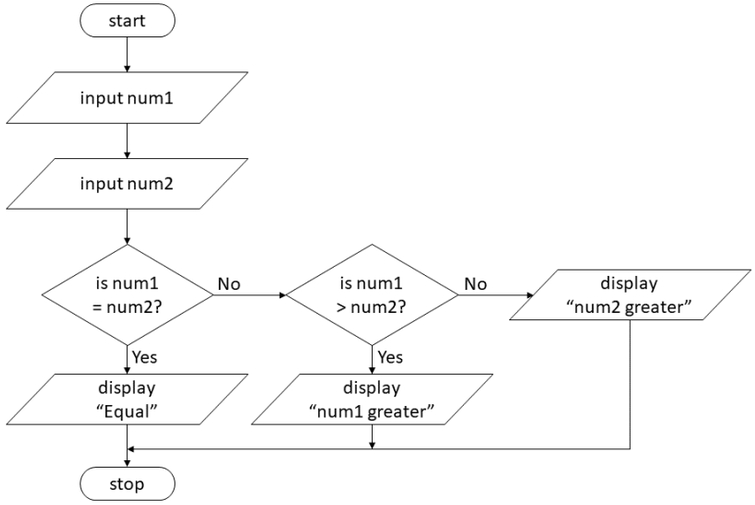	• Award 'End', 'Stop', 'Start' and 'Begin' as text for terminator symbols. • Award '==' and '=' used for equivalence inside decision symbol. • Accept 'Print' or 'Output' as an alternative to 'Display' in the output symbols. No quotes required around output string. • Accept True/False for Yes/No labels	**6**

PMT

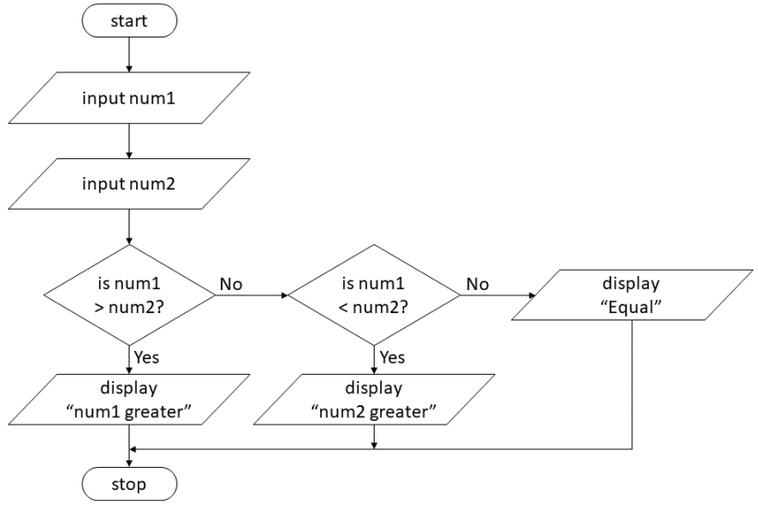

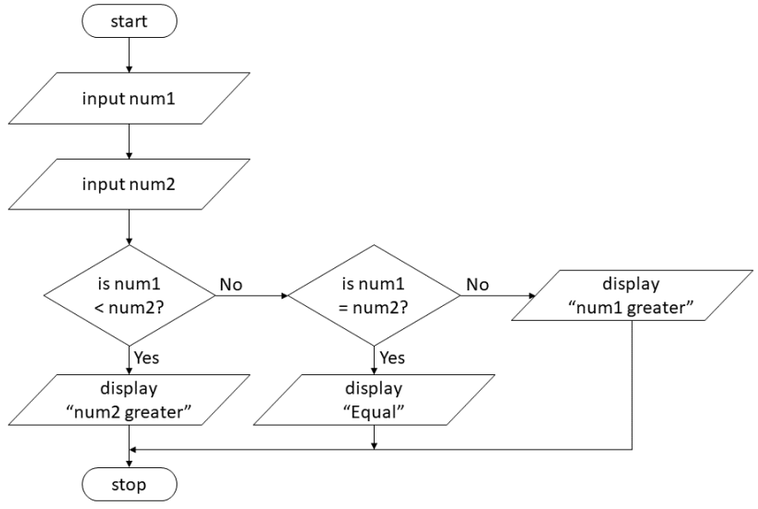

20

1CP2-01

PMT

Question 2 (a)(i)

One common misconception was that low-level programming languages allow a computer to understand the code.

2 Computers

(a) Some low-level programming languages use mnemonics.

(i) State the purpose of a mnemonic.

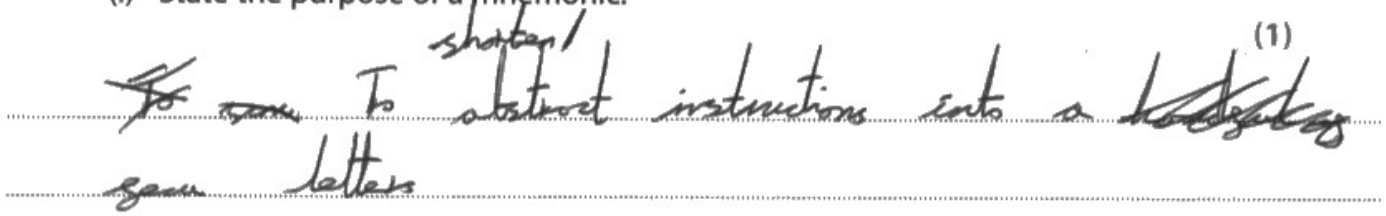

ResultsPlus
Examiner Comments

This is an example of a response that gains the mark.

Total: 1 Mark

Question 2 (a)(ii)

Fewer than a quarter of candidates gained the mark for this question.

Question 2 (a)(iii)

Many responses to this question repeated the answer that was given to Q2(a)(i) and either did not appear to understand that this question was looking for different characteristics, or had not answered Q2(a)(i) correctly but put a correct description of a mnemonic here.

(iii) Mnemonics are one characteristic of some low-level languages.
Describe **one other** characteristic of a low-level language.

(2)

Binary

ResultsPlus Examiner Comments

Machine code is written in binary. Binary is not a low-level language.

Total: 0 Marks

(iii) Mnemonics are one characteristic of some low-level languages.
Describe **one other** characteristic of a low-level language.

(2)

A low level language is able to directly control hardware processes as it is CPU specific code.

ResultsPlus Examiner Comments

This response gains both marks from mark point 1.

Total: 2 Marks

Question 2 (a)(iv)

Almost half of the candidates gained the mark for this question.

Question 2 (b)

Almost half of the candidates did not gain a mark on this question, which is concerning, considering it is one of the fundamental definitions.

Question 2 (c)(i)

Again: almost half of the candidates did not gain a mark, with many referring to reading of the data rather than writing it.

Question 2 (c)(ii)

Rather more than half of the candidates gained the mark.

Question 2 (d)

Over three-quarters of the candidates did not gain the mark for this question.

Many candidates restated the question, by saying an embedded system has one specific purpose.

Question 2 (e)

The majority of candidates gained both marks.

Question 2 (f)

There were a few responses on types of errors: syntax and logic were mentioned quite frequently.

Over half of the candidates did not gain a mark, but there were some good responses related to security vulnerability and unvalidated 3rd party libraries.

Question 2 (g)

A number of candidates were of the opinion that the operating system granted permissions directly to the users.

Many candidates identified correctly that administrators can add and delete users, but then did not achieve the linked mark for 'so multiple people can use the same computer'.

Many candidates stated correctly that administrators can enforce permissions; quite often this came with stating that levels of read/write access for file resources could be enforced.

Quite a large number of candidates discussed enforcing user permissions, such as the type of access they would have to a file or installing programs.

Question 4 (a)

Many candidates achieved some credit and the most common correct response was that the whole source code is translated in one go by a compiler and that errors are reported at the end of the process. A number of candidates gave characteristics that were given in the question such as a machine code executable file is output. A number of candidates either gave advantages of a compiler rather than characteristics or confused a compiler with an interpreter.

4 Computers

(a) A compiler translates source code to machine code. If the source code is edited, it must be recompiled.

Give **two other** characteristics of a compiler.

(2)

1 It translates the entire source code at once.

2 It creates a file of executable machine code after translation.

ResultsPlus
Examiner Comments

This response scores 1 mark for identifying that the entire source code is translated in one go. The second point made by the candidate that an executable machine code file is output was already given in the question.

Question 4 (b)

Many candidates found this question challenging. Misconceptions included confusion with defragmentation of filing systems or the scheduling of processes, presumably because these are both topics covered under the umbrella of operating systems. Many candidates simply repeated the terms files and folders from the question. Few could clearly articulate that a hierarchical structure with a root directory is used or describe the relationship between folders and subfolders.

(b) Describe how an operating system organises files and folders.

(2)

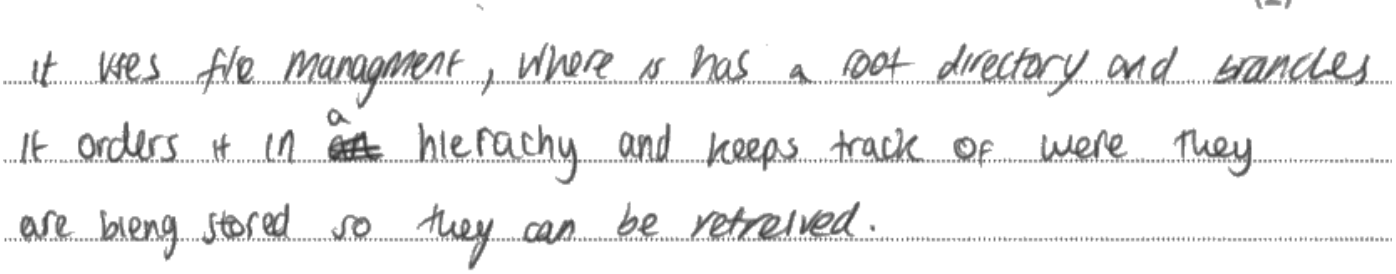

ResultsPlus
Examiner Comments

This response scores full marks for identifying that a hierarchical structure with a root directory is used.

Question 4 (c)

Many candidates found this to be a challenging question and there were many vague or inaccurate responses. Audit trails were frequently confused with robust programming techniques and code reviews. Where candidates did identify that an audit trail logged changes made with details of the change, they struggled to give a linked explanation to gain a second mark for saying how this information in the audit trail could be used. There was limited understanding of the accountability that is imposed by an audit trail.

(c) Explain **one** way an audit trail helps programmers create robust software.

(2)

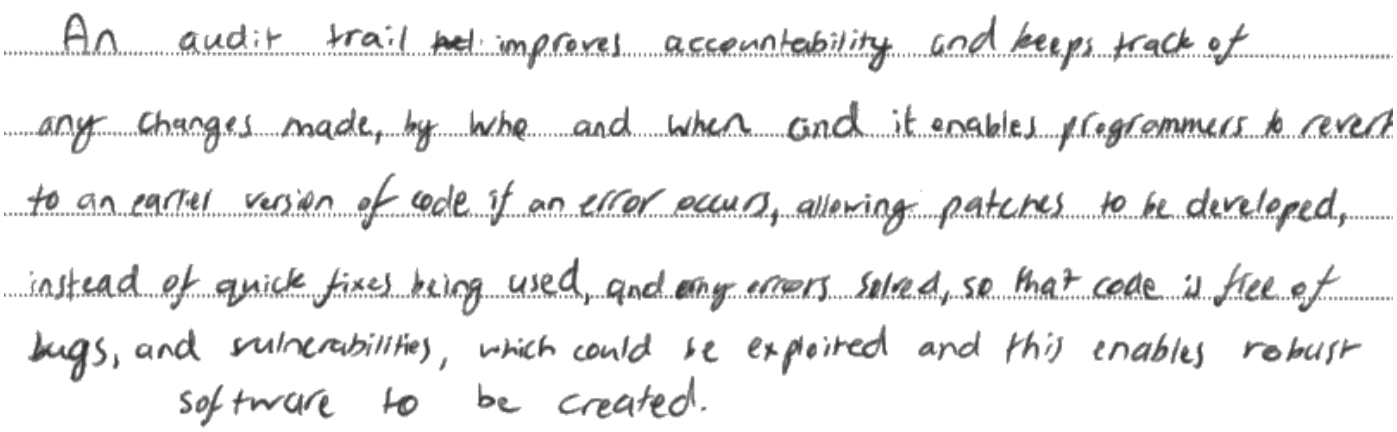

ResultsPlus
Examiner Comments

This response scores 2 marks for identifying that an audit trail increases accountability because it logs who and when changes were made.

Question 4 (d)

Whilst many candidates gained some credit, many responses were too vague and did not clearly articulate how parts of the system such as the camera and the database would be used. Clear responses identified that the camera was required to scan the number plate and that this then had to be cross referenced to the database to determine if the car had paid or not. The question gave a lot of contextual information for the scenario which candidates were expected to draw upon to apply their knowledge.

Describe what the system does when the exit sensor is activated by a car driving towards it.

(2)

Once the car is detected the camera will scan the number plate and check the database to see whether they have paid. If they have the barrier will open and they can drive out. If not it will remain closed.

ResultsPlus Examiner Comments

This response scores 2 marks for stating that the camera will be used to scan the number plate and that this would then be looked up in the database.

Question 4 (e)

Many candidates identified the address and data bus correctly, but far fewer could connect the clock to the control unit. Many candidates erroneously connected the clock to the buses. The question also asks for one line to be drawn from the clock and many candidates did not read this and drew multiple lines.

(e) The components of a computer carry out the fetch-decode-execute cycle.

Complete the diagram with:

- the names of **two** buses
- a directional connection from the clock to the correct component.

(3)

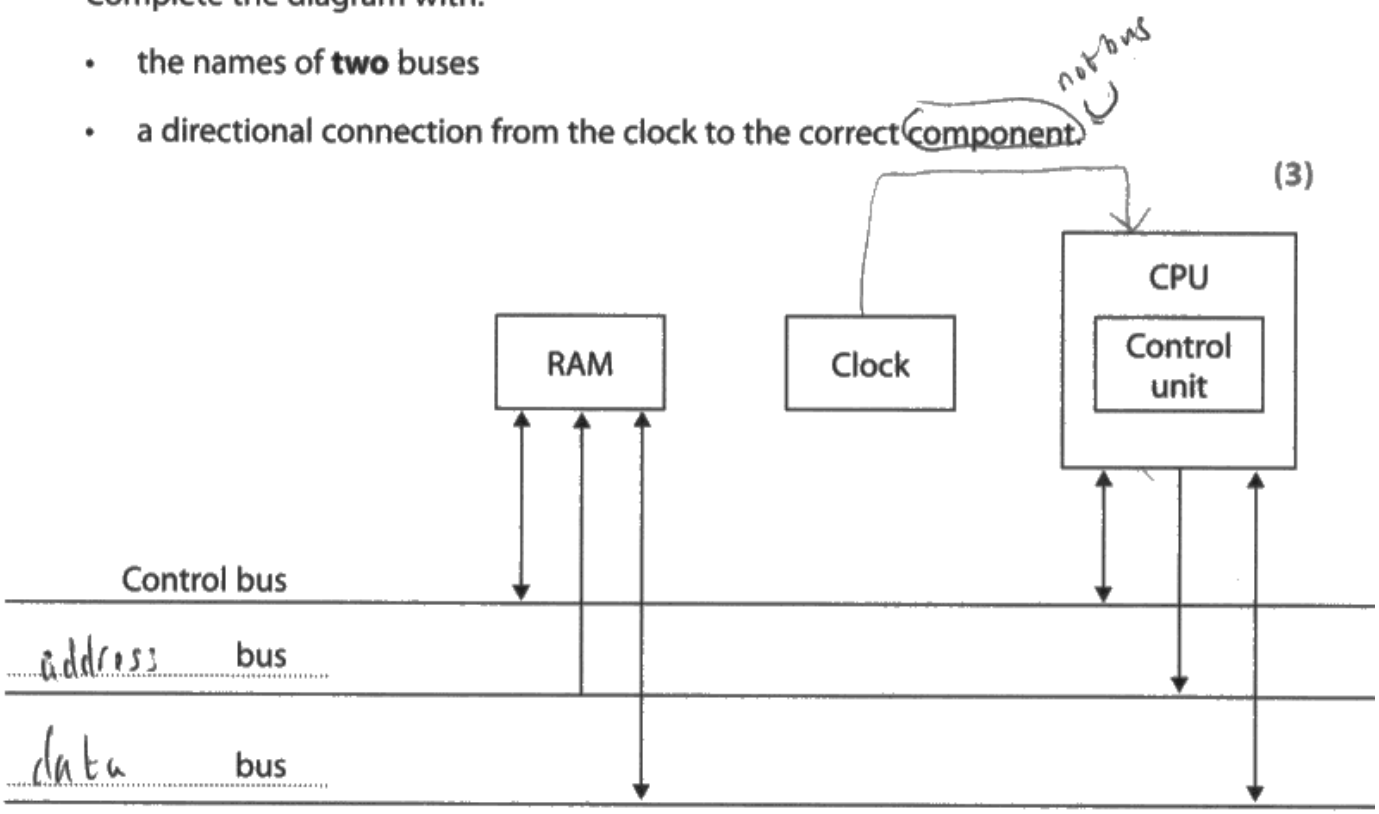

ResultsPlus Examiner Comments

This response scores 3 marks for correctly completing the diagram with the address and data bus and the clock connection to the CPU.

Question 4 (f)

Many candidates demonstrated limited knowledge of low level languages and few managed to explain how assemblers could be used. Many responses displayed misconceptions or made generalisations such as high level languages are more understandable without expanding on the reasons for this being the case. Where candidates did not address the context of the question, and specifically the hardware features of the phone and the applications on the phone, they limited the marks they could achieve. It is a long question and few candidates managed to organise their response clearly through the use of structured paragraphs.

in-devices to perform their basic functions such as taking photographs with a camera or recording sound using the microphone. Mnemonics are used often to make programming easier as low level languages are extremely similar to machine code, so it is difficult to be written/understood by humans. Thus, low-level language provides the bridge between hardware and software and built in devices while, high level languages run on the operating system to interact directly with the user and perform tasks within applications.

(Total for Question 4 = 17 marks)

ResultsPlus
Examiner Comments

This response scores full marks for demonstrating comprehensive understanding of the key concepts that are relevant regarding the use of high and low level languages in this scenario. The response is well structured; it first examines how high level languages allow greater flexibility in terms of software development of applications. It then looks at the benefits of using assembly to access hardware specifics.

Question 2(a)

Many candidates gave vague responses or copied labels from the photo stimulus given in the question such as 'wash temp'. This did not give the function of the related embedded system which was to monitor the water temperature until it reached the required temperature. In general, responses needed to be more specific as to what was being controlled.

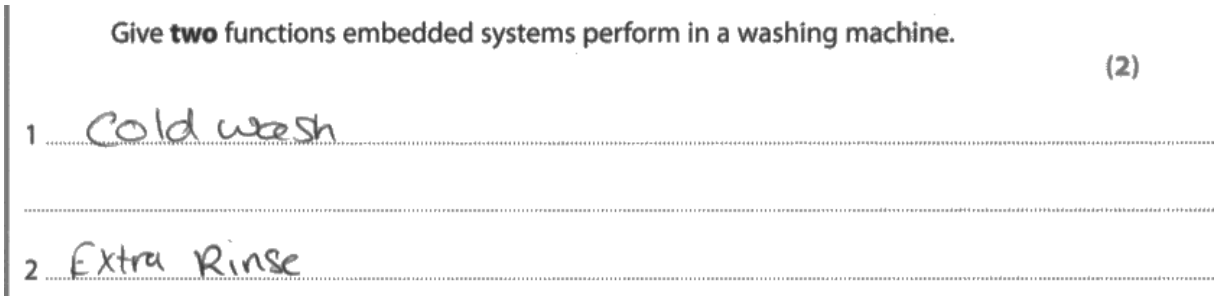
Give **two** functions embedded systems perform in a washing machine.

(2)

1 Cold wash

2 Extra Rinse

ResultsPlus
Examiner Comments

This response scored 0 marks. It copied labels from the photograph in the question without identifying specific control systems that would be used.

Question 2(b)i

Many candidates identified reasons for using non-volatile storage such as storing the BIOS or storing programs/data permanently. Where candidates drew comparisons between volatile storage, and RAM in particular, they were awarded a mark for a valid comparison such as higher storage capacity.

(b) Computers use different types of storage.

(i) Non-volatile storage keeps its content when the power is turned off.

Give **one other** reason why computers use non-volatile storage.

(1)

To store the bootstrap that helps start the computer.

ResultsPlus
Examiner Comments

This response gained 1 mark for identifying that non-volatile storage is often used to store the BIOS/bootstrap sequence.

Question 2(b)ii

Most candidates identified optical storage media as the correct response.

Question 2(c)i

Many candidates were able to state that an interpreter translates high-level source code one line at a time, but fewer were able to identify a second point such as code is executed immediately after translation. A number of candidates confused interpretation with compilation and wrote that the source code was translated into machine code.

(c) Programmers write code.

(i) Describe how an interpreter translates high-level code.

(2)

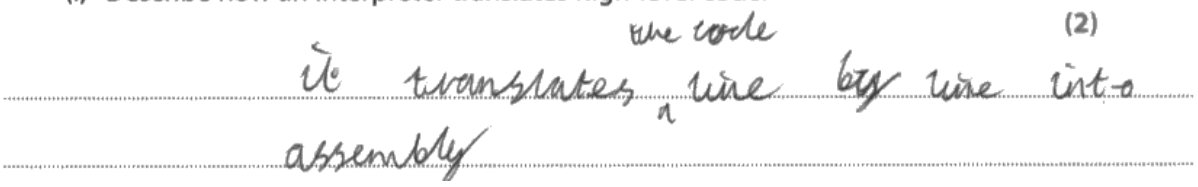

ResultsPlus
Examiner Comments

This response scored 1 mark for identifying that interpreters translate source code line-by-line. It did not go on to expand upon this point to form a linked description.

Question 2(c)ii

Some candidates confused characteristics with benefits and drawbacks and erroneously gave responses that compared writing code in assembly language with writing code in a high level language. Where candidates did list characteristics of assembly language, they frequently cited that mnemonics were used (although often spelt incorrectly) to represent instructions and that assembly was architecture specific.

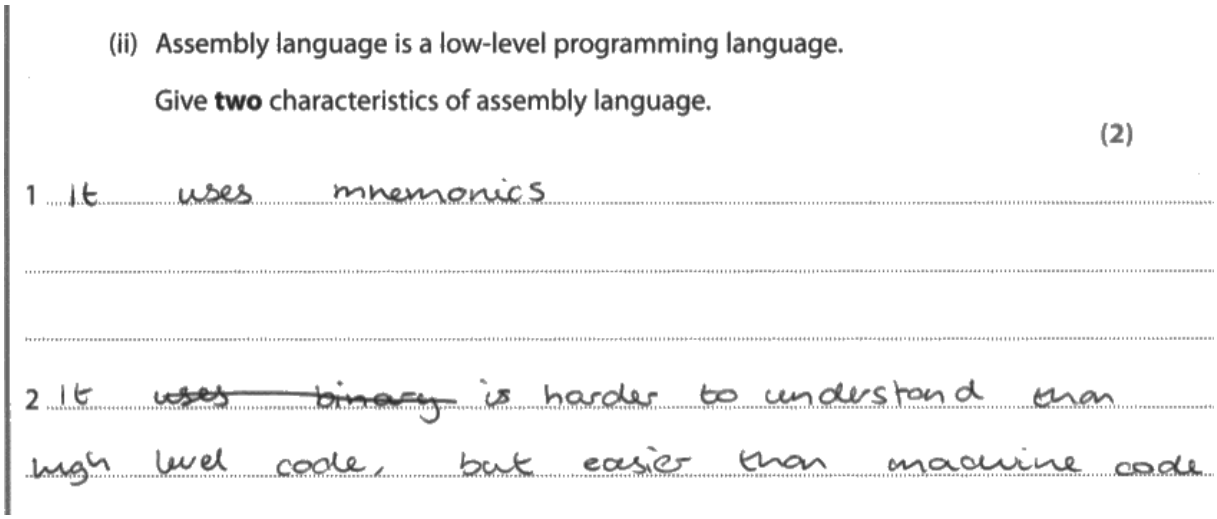

(ii) Assembly language is a low-level programming language.

Give **two** characteristics of assembly language.

(2)

1 It uses mnemonics

2 It ~~uses binary~~ is harder to understand than high level code, but easier than machine code

ResultsPlus
Examiner Comments

This response scored 1 mark for identifying that assembly language uses mnemonics. It did not gain a mark for the second point made because that is a drawback of using assembly language rather than a characteristic.

Question 2(c)iii

Audit trail was commonly identified correctly.

Question 2(d)

Most candidates struggled with the concept of virtual memory and how it is used in process management. The need to understand how virtual memory is used in process management is flagged in the Getting Started Guide. Many candidates' responses were vague and alluded to the use of virtual memory when main memory ran out. Few candidates were able to accurately describe how inactive processes could be temporarily moved out of RAM to secondary storage to free up space in RAM until such time as they were required again. A common misconception was to confuse virtual storage with cloud storage.

(d) One role of the operating system is to allocate memory to processes.

Describe how the operating system makes use of virtual memory when there is a shortage of main memory.

(2)

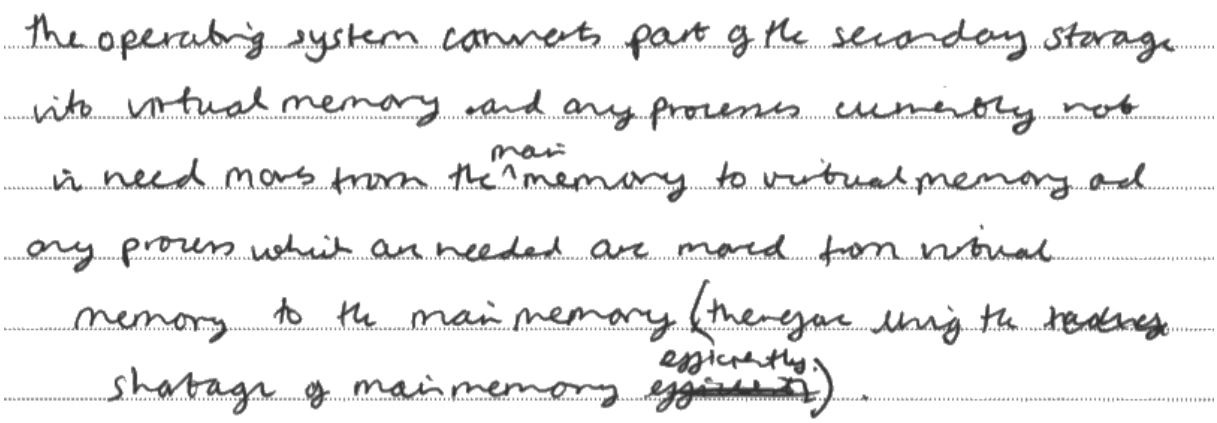

ResultsPlus
Examiner Comments

This response scored 2 marks for clearly identifying that processes not currently being used can be transferred from RAM to secondary storage to free up RAM for other processes to use and then retrieved from the virtual memory when required.

Question 2(e)

Whilst some candidates gave clear explanations that file repair utility software is used to retrieve data from corrupted files, many candidates gave very vague answers. Stating that fail repair software is used to repair files was not creditworthy.

(e) File repair is a type of utility software.

Explain **one** reason why file repair software is needed.

(2)

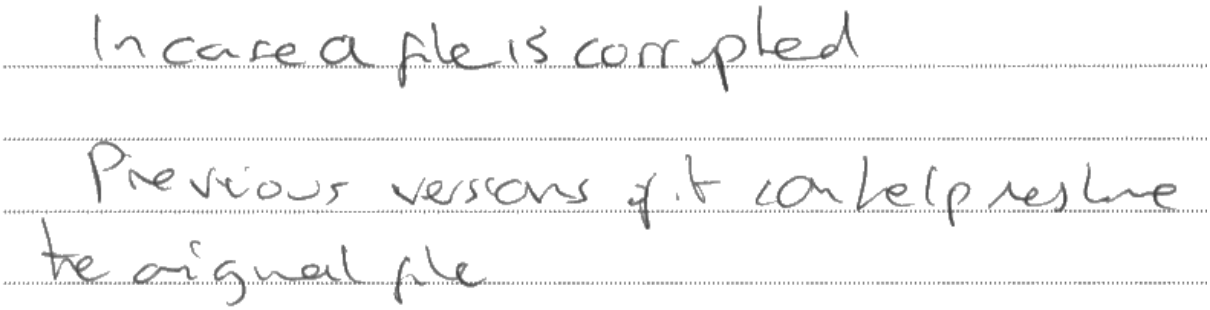

ResultsPlus
Examiner Comments

This response scored 1 mark for the initial identification of using file repair software when a file is corrupted. However, the next sentence referred to backup software for previous versions and not file repair software to retrieve content from corrupted files.

Question 2(f)

Most candidates correctly identified a number of the labels on the microprocessor diagram. Common errors included stating CPU instead of CU for Label A or being too vague and saying 'bus' or 'memory bus' instead of 'address bus' for Label B.

Identification of the clock for Label C was the least well answered part of the question.