Chhetri Academy

chhetriacademy.com

GCSE COMPUTER SCIENCE

3.2

Edexcel 1CP2 | Specification point 3.2.2

The purpose and functionality of utility software (file repair, backup, data compression, disk...

Untiered

Past paper question booklet

2	2023-2025	Untiered
question groups	available papers	tier

Before you begin

1. Show working and use units where appropriate.
2. Use extra paper if you need more space.
3. Print at actual size (100%) for measurement questions.

Name _____ **Date** _____

Whole questions are retained for context; some parts cover other points. Legacy sources are labelled.

1 Computers

(a) The CPU contains a number of components.

(i) Complete the table with the correct bus for each role.

(3)

Bus	Role
	Carries a read signal to main memory.
	Carries the memory location of a piece of data.
	Carries an instruction from main memory to the CPU.

(ii) Identify the component inside the CPU that stores data.

(1)

☒ **A** Arithmetic logic unit

☒ **B** Clock

☒ **C** Main memory

☒ **D** Register

(b) Algorithms can be written in a high-level language.

(i) State what high-level code is translated to.

(1)

.....

(ii) State **two** methods of source code translation.

(2)

1 .....

2 .....

(c) Identify the feature of an optical disc that allows data to be read.

(1)

- ☒ **A** It is magnetic
- ☒ **B** It is portable
- ☒ **C** It is reflective
- ☒ **D** It is volatile

(d) Define the term 'embedded system'.

(1)

.....

.....

(e) A code review is carried out by a programmer or an automated system.

Both methods cost money.

Complete the table with **one other disadvantage** for each method.

(2)

Method of code review	Disadvantage
By a programmer	
By an automated system	

(f) Identify the purpose of defragmentation software.

(1)

- ☒ **A** Compressing data
- ☒ **B** Encrypting data
- ☒ **C** Organising data
- ☒ **D** Protecting data

(g) One function of an operating system is to manage processes.

(i) Describe **one** way the operating system makes sure each process can use the CPU.

(2)

.....

.....

.....

.....

(ii) Give **one other** function of an operating system.

(1)

.....

.....

(Total for Question 1 = 15 marks)

2 Computers

(a) A washing machine uses many different embedded systems to wash clothes.



(Source © Pearson Asset Library)

Give **two** functions embedded systems perform in a washing machine.

(2)

1 .....

.....

2 .....

.....

(b) Computers use different types of storage.

(i) Non-volatile storage keeps its content when the power is turned off.

Give **one other** reason why computers use non-volatile storage.

(1)

(ii) State the type of secondary storage media that stores data as a sequence of pits and lands.

(1)

(c) Programmers write code.

(i) Describe how an interpreter translates high-level code.

(2)

(ii) Assembly language is a low-level programming language.

Give **two** characteristics of assembly language.

(2)

1

2

(iii) Software development teams use different methods to produce robust code.

Name the method that records code changes, who made them and when.

(1)

(d) One role of the operating system is to allocate memory to processes.

Describe how the operating system makes use of virtual memory when there is a shortage of main memory.

(2)

(e) File repair is a type of utility software.

Explain **one** reason why file repair software is needed.

(2)

(f) Here is a diagram of a central processing unit.

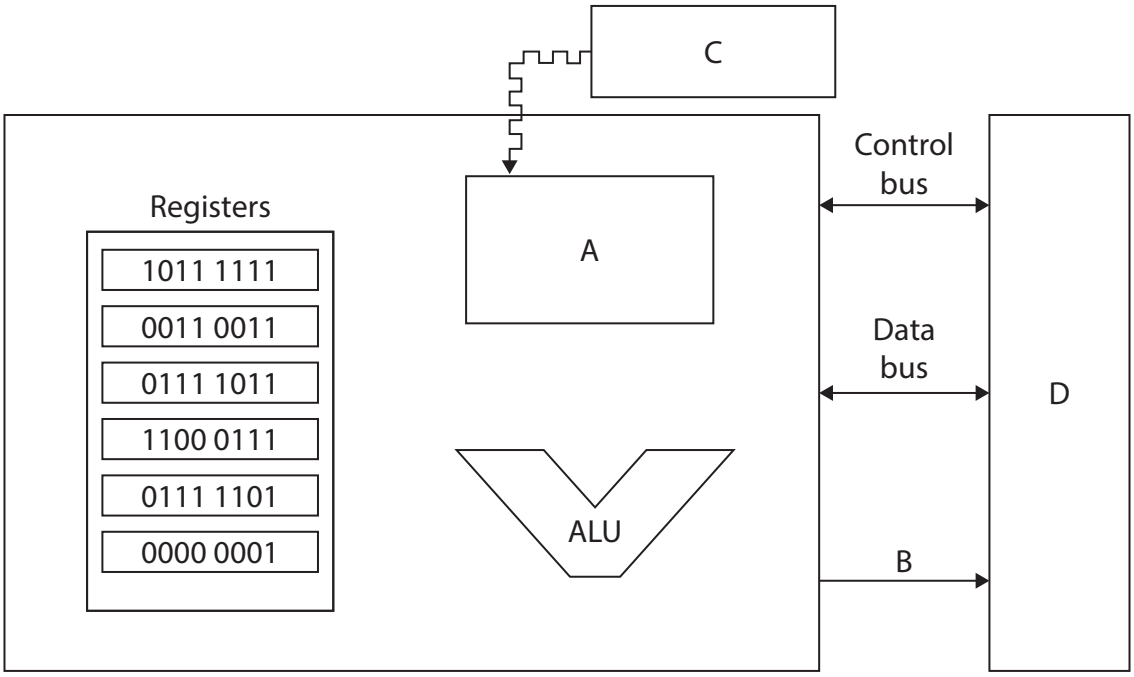

Complete the table with the name for the labelled components.

(4)

Label	Component
A	
B	
C	
D	

(Total for Question 2 = 17 marks)