Chhetri Academy

chhetriacademy.com

GCSE COMPUTER SCIENCE

2.1

Edexcel 1CP2 | Specification point 2.1.6

Why hexadecimal notation is used and be able to convert between hexadecimal and binary

Untiered

Past paper question booklet

4	2016-2025	Untiered
question groups	available papers	tier

Before you begin

1. Show working and use units where appropriate.
2. Use extra paper if you need more space.
3. Print at actual size (100%) for measurement questions.

Name _____ **Date** _____

Whole questions are retained for context; some parts cover other points. Legacy sources are labelled.

1 (a) Computer networks are valuable to many businesses and individuals.

(i) State the purpose of network protocols.

(1)

.....

.....

Here is a diagram showing the Internet as a network of networks. Each square represents a computing device.

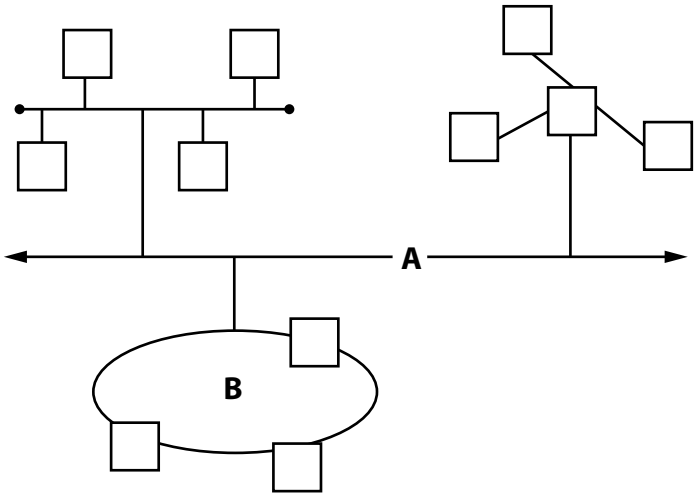

(ii) State the name of the high-speed Internet infrastructure shown at **A**.

(1)

.....

(iii) State the name of the network topology shown at **B**.

(1)

.....

(iv) Identify the type of network used in each situation.

(4)

Situation	LAN	WAN	PAN	VPN
A delivery driver uses a hands-free car kit to connect to his mobile phone.	☒	☒	☒	☒
A dental nurse uses a computer to look at digital x-rays stored on a server in the basement of the building.	☒	☒	☒	☒
A manager, working from home, is able to access all the computers in his company as if he was in the company office.	☒	☒	☒	☒
An office in Tokyo sends emails to all customers, whether they are in New York, Paris or Delhi.	☒	☒	☒	☒

(b) Data transmitted over a network is sometimes encrypted.

(i) State **one** reason why data encryption is used on a network.

(1)

.....

.....

(ii) Complete the table using a Caesar cipher to encrypt and decrypt the text.

(2)

Plain text	Shift	Cipher text
d i g i t	+3	
	–2	z g l y p w

(c) Binary numbers are used to represent data in programs.

(i) Complete the table by adding these two positive 8-bit binary integers.

(1)

0	1	1	1	0	0	1	0
0	0	1	0	0	0	1	1

(ii) Convert the 8-bit binary 01101110 to hexadecimal.

(1)

.....

.....

(iii) Convert the hexadecimal number C4 to 8-bit binary.

(1)

.....

.....

(iv) Write an arithmetic expression to show that 256 different numbers can be represented in 8 bits.

(1)

.....

.....

(d) (i) State **one** characteristic of a lossy compression algorithm.

(1)

.....

.....

(ii) Identify an example of lossy compression.

(1)

- ☒ **A** GIF
- ☒ **B** JPEG
- ☒ **C** ZIP
- ☒ **D** TIFF

(e) Binary digits can represent Cartesian coordinates.

A turtle is used to draw on a Cartesian coordinate system. The turtle begins at the origin.

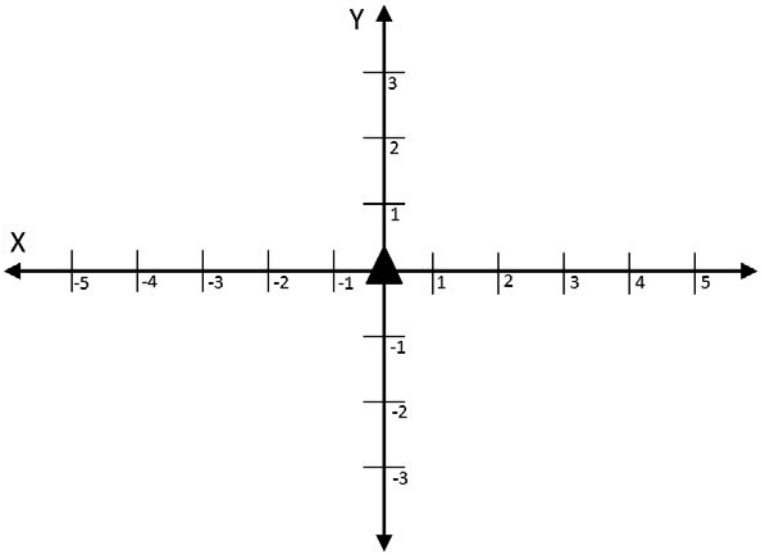

The turtle follows this program.

```
FORWARD 3
TURN RIGHT 90
FORWARD 5
TURN LEFT 180
FORWARD 3
```

Write the final location of the turtle using Cartesian coordinates.

(2)

.....

.....

(Total for Question 1 = 18 marks)

5 Computers carry out mathematical operations.

(a) Give the result of applying a logical shift left by 2 to the 8-bit binary pattern 00110110.

(1)

(b) Describe the function of the component labelled A.

(2)

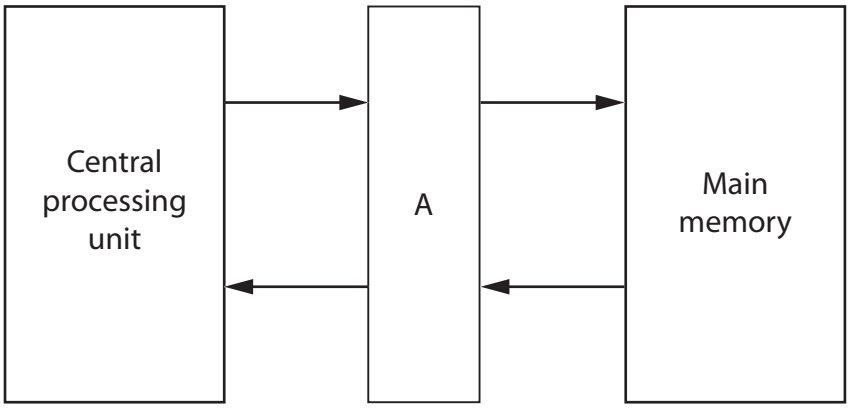

(c) (i) Convert the binary number 00111101 to hexadecimal.

(2)

(ii) Explain why hexadecimal notation is used.

(2)

(d) Describe the role of the control unit, the data bus and the address bus when fetching an instruction from memory.

(4)

(e) State why a binary search algorithm will not be appropriate for use with this sequence of numbers.

55	33	2	47	90	105	44	3

(1)

(Total for Question 5 = 12 marks)

1 A computer game designer is creating a new game.

(a) Colours in the game are represented in hexadecimal.

Convert the binary numbers in this table to hexadecimal.

(3)

	Hexadecimal
1101 1110	
1010 1111	
1100 0100	

(b) Convert the hexadecimal number 12 to binary and the result from binary to denary.

(2)

Binary

.....

.....

Denary

.....

.....

(c) State what is meant by the term 'image resolution'.

(1)

(d) Computers use binary to represent colour.

Compare the use of 8 bits and 24 bits to represent colour.

(3)

(e) The game uses black and white as well as colour images.

Explain the effects of using a run-length encoding (RLE) algorithm on the black and white images used in the game.

(3)

(Total for Question 1 = 12 marks)

1 Data

(a) Binary patterns consist of groups of bits.

(i) Identify the largest unit of measurement.

(1)

- ☒ **A** Gibibyte
- ☒ **B** Kibibyte
- ☒ **C** Mebibyte
- ☒ **D** Nibble

(ii) State the number of unique values that can be represented with 7 bits.

(1)

.....

.....

.....

(iii) The denary ASCII code for **D** is 68.

Give the denary ASCII code for **G**.

(1)

.....

.....

(b) Hexadecimal is used to represent memory addresses.

(i) Give **two** characteristics of hexadecimal notation.

(2)

1 .....

.....

2 .....

.....

(ii) Explain **one** reason why programmers use hexadecimal to specify memory addresses.

(2)

(c) Audio and image files store data in binary.

(i) Explain **one** reason why lossy compression is used to reduce the size of an audio file.

(2)

(ii) An image is 315 pixels wide, 923 pixels high and has a colour depth of 7 bits.

Complete the expression to show the minimum file size in bytes.

You do not have to do the calculation.

(3)

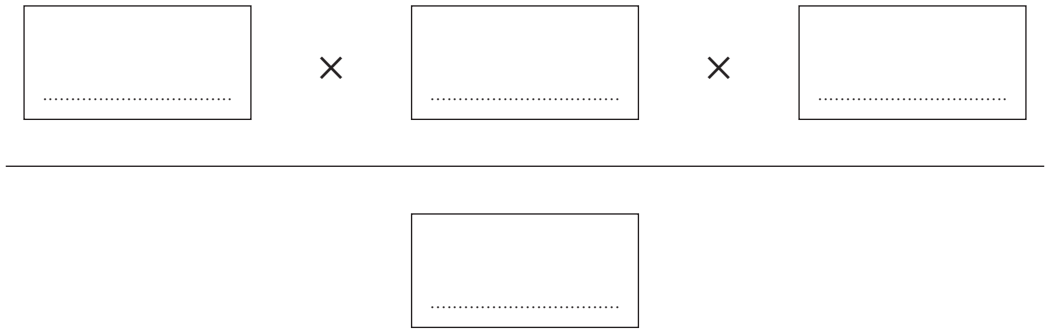

(d) Computer systems manipulate bit patterns.

(i) Identify the result of applying an arithmetic shift right by two to the binary pattern 0110 1100

(1)

- ☒ **A** 0001 1100
- ☒ **B** 1101 1000
- ☒ **C** 0001 1011
- ☒ **D** 1011 0000

(ii) Convert the denary number 25 to 8-bit binary.

(2)

(iii) Convert the denary number –13 to 8-bit binary using two's complement.

(2)

(Total for Question 1 = 17 marks)