AQA GCSE Combined Science - Trilogy | 8464

SPECIFICATION POINT 6.5.4.2.1

Newton's First Law

Past-paper questions

Tier	**Higher**
Question groups	**3**
Available paper years	**2018–2022**

Using this booklet

1. Answer the questions in order and show your working.
2. Original question numbers and marks are retained.
3. Print at actual size (100%) for measuring questions.
4. Use the companion answer booklet to check your work.

Name: _____ **Date:** _____

Whole questions are retained for context, so some parts assess other specification points. Current and legacy sources are labelled. Continue on extra paper if needed.

6.5.4.2.1 Newton's First Law

Question 01

June 2018 | 8464/P/2H | Original Q1

0 1 A student investigated acceleration using gliders, an air track and light gates.

The air track reduces friction between the glider and the track to zero.

Figure 1 shows the apparatus.

Figure 1

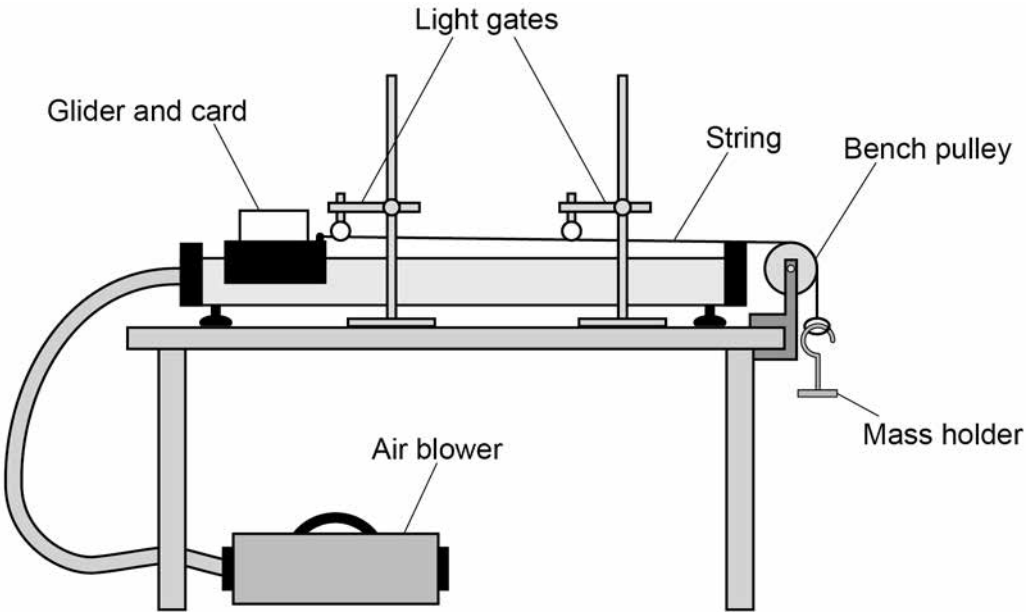

The glider was released from rest and moved along the track.

The mass holder hit the ground before the card passed through the second light gate.

0 1 . 1 Which **two** statements describe the effect this would have on the glider?

[2 marks]

Tick **two** boxes.

Its acceleration would decrease to zero. ☐

Its acceleration would increase. ☐

The resultant force on it would decrease to zero. ☐

The resultant force on it would increase. ☐

Its speed would increase. ☐

6.5.4.2.1 Newton's First Law

Question 01 · continued

0 1 . 2 The mass holder should **not** hit the ground before the card passes through the second light gate.

Suggest **one** way that the student could stop this happening.

[1 mark]

Question 1 continues on the next page

6.5.4.2.1 Newton's First Law

Question 01 · continued

The student increased the resultant force acting on the glider by adding more masses to the mass holder.

She calculated the acceleration of the glider for each resultant force.

Each test was done three times.

Table 1 shows the results.

Table 1

Resultant force in N	Acceleration in m/s^2			Mean acceleration in m/s^2
	Test 1	Test 2	Test 3	
0.20	1.3	1.2	1.3	1.26667
0.39	2.6	2.5	2.6	2.6
0.59	3.8	3.8	3.9	3.8
0.78	5.1	5.1	5.1	5.1
0.98	6.4	7.2	6.4	6.7

0 1 . 3 The student made **two** mistakes in the mean acceleration column.

Identify the mistakes the student made.

Suggest how each mistake can be corrected.

[4 marks]

Mistake _____

_____

Correction _____

_____

Mistake _____

_____

Correction _____

_____

6.5.4.2.1 Newton's First Law

Question 01 · continued

0 1 . 4 Write a conclusion for this investigation.

Use the data in **Table 1**

[1 mark]

Question 1 continues on the next page

6.5.4.2.1 Newton's First Law

Question 01 · continued

0 1 . 5 The student used a constant resultant force to accelerate the glider.

The student changed the mass of the glider and calculated the new acceleration.

She repeated this for different masses of the glider, keeping the resultant force constant.

The results are shown in **Table 2**

Table 2

Mass of the glider in kg	Acceleration in m/s^2
0.060	3.5
0.080	2.6
0.10	2.0
0.12	1.7
0.14	1.4

Plot the results on **Figure 2**

Draw a line of best fit.

[3 marks]

Figure 2

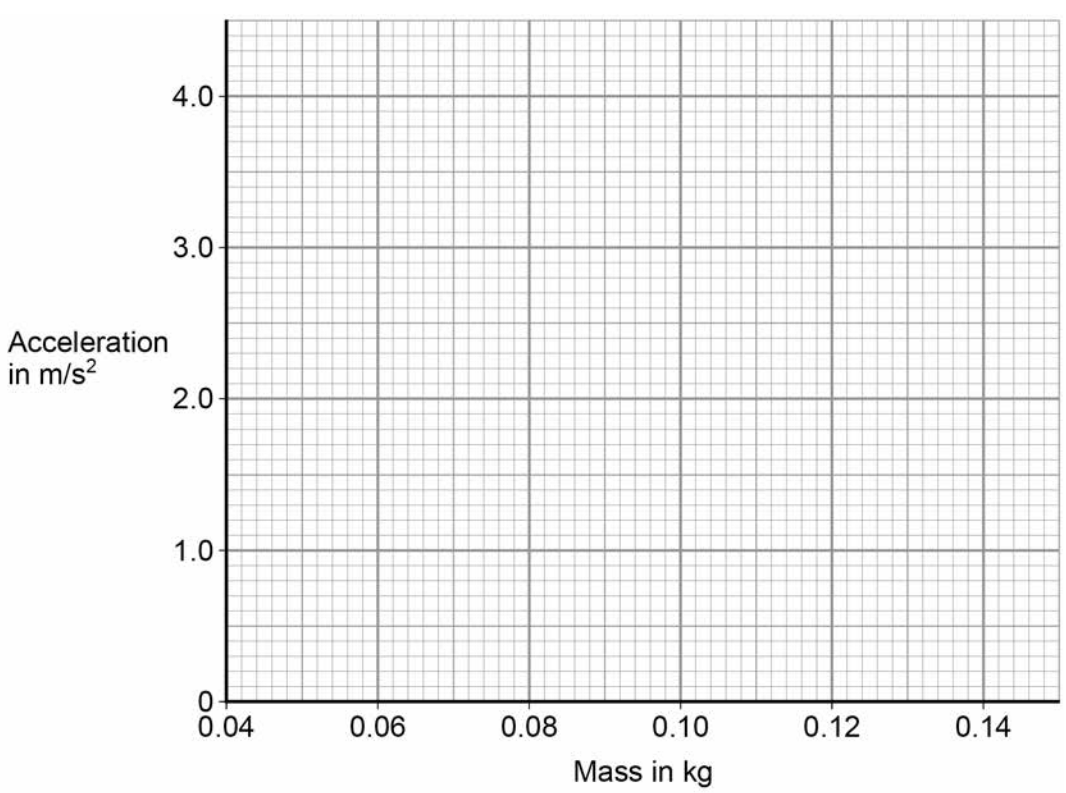

6.5.4.2.1 Newton's First Law

Question 01 · continued

0 1 . 6 Describe the relationship between mass and acceleration.

[1 mark]

12

Turn over for the next question

6.5.4.2.1 Newton's First Law

Question 02

June 2019 | 8464/P/2H | Original Q6

0 6 **Figure 9** shows a free body diagram for an aeroplane flying at a constant speed and at a constant height.

The speed of the aeroplane is much greater than the speed at which the aeroplane lands.

Figure 9

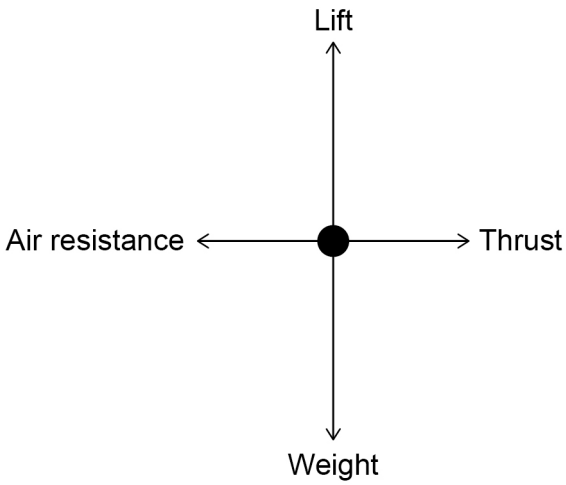

0 6 . 1 Explain how the forces need to change so the aeroplane can land.

[4 marks]

Question 6 continues on the next page

6.5.4.2.1 Newton's First Law

Question 02 · continued

0 6 . 2 The aeroplane lands at a speed of 80 m/s

After landing, the aeroplane takes 28 s to decelerate to a speed of 10 m/s

The mean resultant force on the aeroplane as it decelerates is 750 000 N

Calculate the mass of the aeroplane.

[5 marks]

Mass = _____ kg

9

6.5.4.2.1 Newton's First Law

Question 03

June 2022 | 8464/P/2H | Original Q6

0 6 The distance a car travels during the driver's reaction time is called the thinking distance.

0 6 . 1 **Figure 9** shows how thinking distance depends on speed for a car.

Figure 9

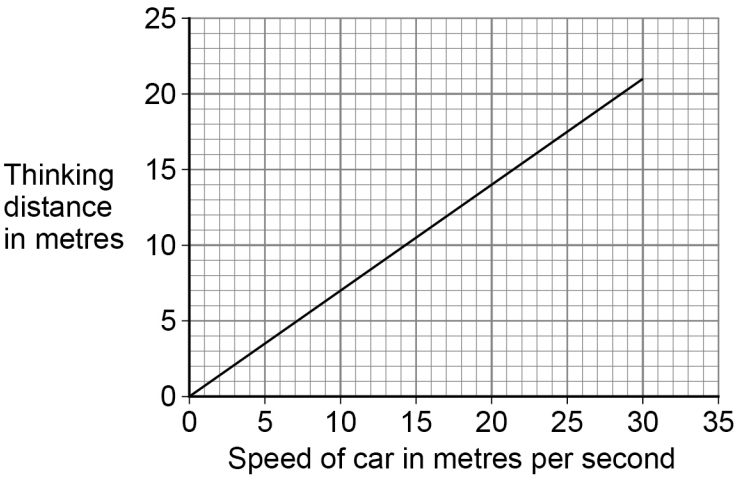

Determine the driver's reaction time.

Use the Physics Equations Sheet.

[3 marks]

Reaction time = _____ s

Question 6 continues on the next page

6.5.4.2.1 Newton's First Law

Question 03 · continued

0 6 . 2 **Figure 10** shows how the velocity of a car changes during braking.

Figure 10

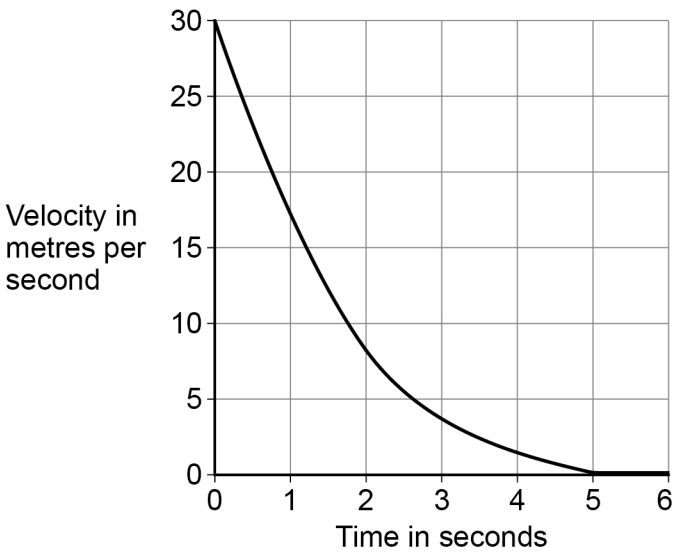

Determine the braking distance of the car.

[3 marks]

Braking distance = _____ m

6.5.4.2.1 Newton's First Law

Question 03 · continued

0 6 . 3 Explain how the gradient of the line on **Figure 10** shows that the resultant force on the car was **not** constant.

[3 marks]

9

Turn over for the next question