AQA GCSE Combined Science - Trilogy | 8464

SPECIFICATION POINT 5.1.1.5

Size and mass of atoms

Past-paper questions

Tier	**Higher**
Question groups	**4**
Available paper years	**2020–2025**

Using this booklet

1. Answer the questions in order and show your working.
2. Original question numbers and marks are retained.
3. Print at actual size (100%) for measuring questions.
4. Use the companion answer booklet to check your work.

Name: _____ **Date:** _____

Whole questions are retained for context, so some parts assess other specification points. Current and legacy sources are labelled. Continue on extra paper if needed.

5.1.1.5 Size and mass of atoms

Question 01

November 2020 | 8464/C/1H | Original Q6

0 6 This question is about gold and compounds of gold.

0 6 . 1 In the alpha particle scattering experiment alpha particles are fired at gold foil.

Alpha particles are positively charged.

Figure 5 shows the results.

Figure 5

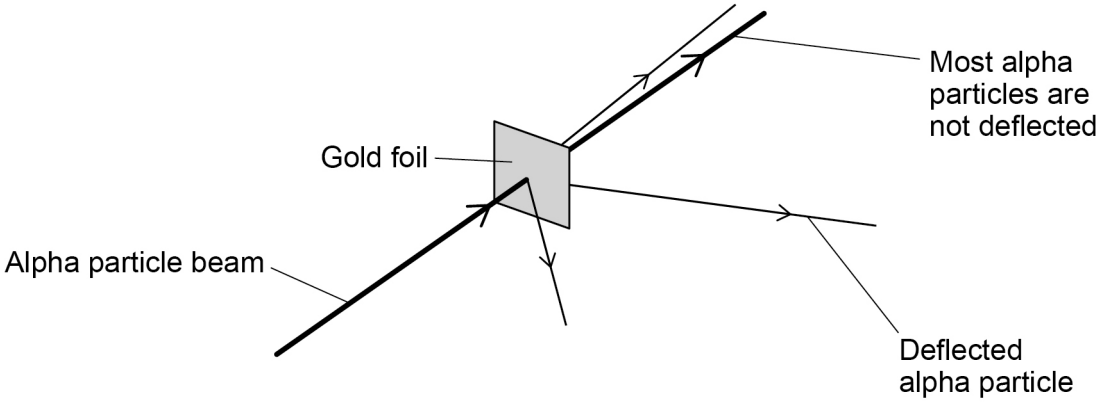

What **two** conclusions can be made from the results?

[2 marks]

Tick (✓) **two** boxes.

Atoms are balls of positive charge with embedded electrons. ☐

Atoms are tiny spheres that cannot be divided. ☐

Atoms have a positively charged nucleus. ☐

Mass is concentrated in the nucleus in the centre of atoms. ☐

Neutrons exist within the nucleus. ☐

Question 6 continues on the next page

5.1.1.5 Size and mass of atoms

Question 01 · continued

0 6 . 2 The gold foil is:

- 4.00×10^{-7} metres thick
- 2400 atoms thick.

What is the diameter of one gold atom in metres?

Give your answer to 3 significant figures.

[3 marks]

Diameter of one gold atom (3 significant figures) = _____ m

5.1.1.5 Size and mass of atoms

Question 01 · continued

0 6 . 3 Gold reacts with the elements in Group 7 of the periodic table.

0.175 g of gold reacts with chlorine.

The equation for the reaction is:

$$2\ Au + 3\ Cl_2 \rightarrow 2\ AuCl_3$$

Calculate the mass of chlorine needed to react with 0.175 g of gold.

Give your answer in mg

Relative atomic masses (A_r): Cl = 35.5 Au = 197

[5 marks]

Mass of chlorine = _____ mg

10

5.1.1.5 Size and mass of atoms

Question 02

November 2021 | 8464/C/1H | Original Q1

0 1 This question is about the periodic table.

0 1 . 1 **Figure 1** shows part of Mendeleev's version of the periodic table.

Figure 1

H							
Li	Be	B	C	N	O	F	
Na	Mg	Al	Si	P	S	Cl	
K Cu	Ca Zn		Ti	V As	Cr Se	Mn Br	Fe Co Ni
Rb Ag	Sr Cd	Y In	Zr Sn	Nb Sb	Mo Te	I	Ru Rh Pd

Which group of elements had **not** been discovered when Mendeleev's version of the periodic table was published?

[1 mark]

5.1.1.5 Size and mass of atoms

Question 02 · continued

Figure 2 represents different models of the atom.

Figure 2

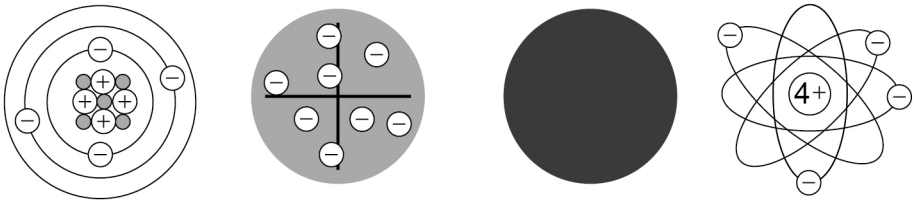

A B C D

0 1 . 2 Which model represents the plum pudding model?

[1 mark]

Tick (✓) **one** box.

A ☐ B ☐ C ☐ D ☐

0 1 . 3 Which model resulted from Chadwick's experimental work?

[1 mark]

Tick (✓) **one** box.

A ☐ B ☐ C ☐ D ☐

Question 1 continues on the next page

Question 02 · continued

Potassium has different isotopes.

0 1 . 4 What is meant by 'isotopes'?

You should refer to subatomic particles.

[2 marks]

0 1 . 5 **Table 1** shows the mass numbers and the percentage abundance of two isotopes of potassium.

Table 1

Mass number	Percentage abundance
39	93.1
41	6.9

Calculate the relative atomic mass (A_r) of potassium.

Give your answer to 1 decimal place.

[3 marks]

Relative atomic mass (1 decimal place) = _____

8

5.1.1.5 Size and mass of atoms

Question 03

June 2023 | 8464/C/1H | Original Q4

0 4 Group 7 elements are known as the halogens.

All atoms of Group 7 elements contain protons, neutrons and electrons.

0 4 . 1 What is the order of discovery of the proton, neutron and electron?

[1 mark]

Tick (✓) **one** box.

electron → neutron → proton ☐

electron → proton → neutron ☐

neutron → proton → electron ☐

proton → electron → neutron ☐

0 4 . 2 **Table 1** shows the mass of a proton and of an electron.

Table 1

Name of particle	Mass in kg
Proton	1.673×10^{-27}
Electron	9.109×10^{-31}

Calculate how many times heavier a proton is than an electron.

[2 marks]

Times heavier a proton is than an electron = _____

Question 03 · continued

A bromine atom can be represented as $^{81}_{35}Br$.

0 4 . 3 What is the number of neutrons in this bromine atom?

[1 mark]

0 4 . 4 What is the number of electrons in a bromide **ion**?

[1 mark]

0 4 . 5 Chlorine has two isotopes.

Table 2 shows the percentage abundance of the two isotopes of chlorine.

Table 2

Isotope	Percentage (%) abundance
$^{35}_{17}Cl$	75.77
$^{37}_{17}Cl$	24.23

Calculate the relative atomic mass (A_r) of chlorine.

Give your answer to 2 decimal places.

[3 marks]

Relative atomic mass (2 decimal places) = _____

5.1.1.5 Size and mass of atoms

Question 03 · continued

0 4 . 6 **Figure 4** shows the outer shells in one molecule of chlorine (Cl_2).

Complete the dot and cross diagram to show the electrons in the outer shells.

[2 marks]

Figure 4

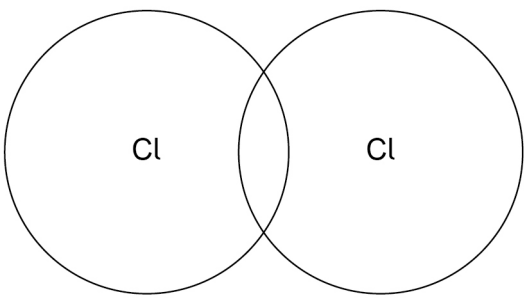

10

5.1.1.5 Size and mass of atoms

Question 04

June 2025 | 8464/C/1H | Original Q3

0 3 This question is about atoms, ions and elements.

0 3 . 1 **Figure 3** shows the results of the alpha particle scattering experiment.

In the experiment, alpha particles were fired at gold foil.

Alpha particles are positively charged.

Figure 3

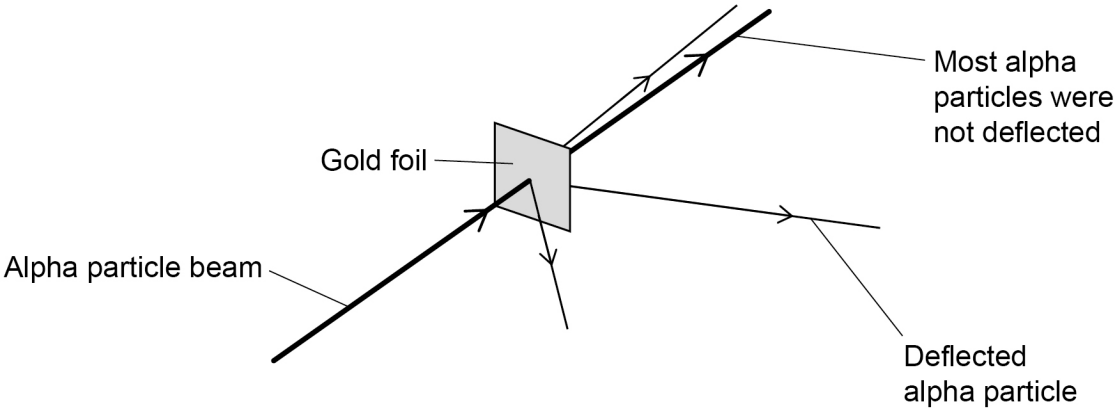

What **two** conclusions were made from the results?

[2 marks]

Tick (✓) **two** boxes.

- Atoms are very small. ☐
- Atoms have a charged nucleus. ☐
- Electrons orbit the nucleus at specific distances. ☐
- Isotopes of an element have a different number of neutrons. ☐
- The mass of an atom is concentrated in the nucleus. ☐

Question 04 · continued

Particle **X** consists of:

- 35 protons
- 44 neutrons
- 36 electrons.

0 3 . 2 Why is particle **X not** an atom?

Answer in terms of subatomic particles.

[1 mark]

0 3 . 3 Which is the correct representation of particle **X**?

Use the periodic table.

[1 mark]

Tick (✓) **one** box.

$^{79}_{35}Br^{+}$ ☐

$^{79}_{35}Br^{-}$ ☐

$^{79}_{35}Se^{+}$ ☐

$^{79}_{35}Se^{-}$ ☐

Group 7 elements are known as the halogens.

0 3 . 4 **Table 2** shows the boiling points of some Group 7 elements.

Table 2

Element	Boiling point in °C
Fluorine	−188
Chlorine	−35
Bromine	59
Iodine	184

Explain the increase in the boiling points of the Group 7 elements going down the group.

[3 marks]

Question 3 continues on the next page

5.1.1.5 Size and mass of atoms

Question 04 · continued

0 3 . 5 Chlorine reacts with fluorine to form a compound with the formula ClF_3

What is the type of bonding in the compound ClF_3?

[1 mark]

0 3 . 6 Chlorine reacts with a solution of sodium bromide.

Complete the word equation for the reaction.

[1 mark]

chlorine + sodium bromide ⟶ _____ + _____

0 3 . 7 Explain why Group 7 elements become less reactive going down the group.

[3 marks]

12