AQA GCSE Combined Science - Trilogy | 8464

SPECIFICATION POINT 5.1.1.1

Atoms, elements and compounds

Past-paper questions

Tier	**Higher**
Question groups	**4**
Available paper years	**2020–2025**

Using this booklet

1. Answer the questions in order and show your working.
2. Original question numbers and marks are retained.
3. Print at actual size (100%) for measuring questions.
4. Use the companion answer booklet to check your work.

Name: _____ **Date:** _____

Whole questions are retained for context, so some parts assess other specification points. Current and legacy sources are labelled. Continue on extra paper if needed.

5.1.1.1 Atoms, elements and compounds

Question 01

November 2020 | 8464/C/1H | Original Q7

0 7 This question is about elements.

Caesium is in Group 1 of the periodic table.

0 7 . 1 Explain what happens to caesium atoms and to oxygen atoms when caesium reacts with oxygen to produce caesium oxide.

You should answer in terms of electrons.

[4 marks]

0 7 . 2 Explain why caesium is more reactive than sodium.

You should answer in terms of electrons.

[4 marks]

5.1.1.1 Atoms, elements and compounds

Question 01 · continued

0 7 . 3 **Figure 6** shows part of Mendeleev's periodic table.

Figure 6

16 **O**	19 **F**
32 **S**	35.5 **Cl**
79 **Se**	80 **Br**
128 **Te**	127 **I**

Explain why the early periodic tables placed iodine (I) before tellurium (Te), but then Mendeleev placed tellurium before iodine.

[3 marks]

11

5.1.1.1 Atoms, elements and compounds

Question 02

June 2022 | 8464/C/1H | Original Q7

0 7 This question is about elements and compounds.

0 7 . 1 **Figure 8** shows a reactivity series.

Figure 8

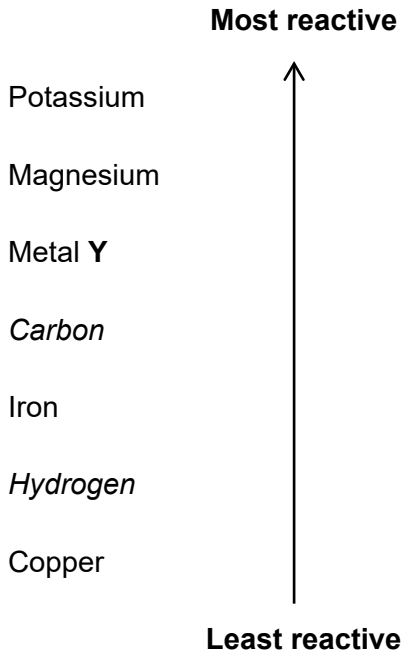

Give the method and conditions used to extract metal **Y** from a compound of metal **Y**.

[2 marks]

Question 7 continues on the next page

5.1.1.1 Atoms, elements and compounds

Question 02 · continued

Sodium reacts with titanium chloride ($TiCl_4$) to produce titanium.

0 7 . 2 Complete the equation.

You should balance the equation.

[2 marks]

____ Na + $TiCl_4$ → _____ + _____

0 7 . 3 The reaction between sodium and titanium chloride is a redox reaction.

Write a half-equation to show that sodium is oxidised in this reaction.

[2 marks]

_____

5.1.1.1 Atoms, elements and compounds

Question 02 · continued

0 7 . 4 108 g of aluminum reacts with 1.21 kg of copper chloride to produce copper.

The equation for the reaction is:

$$2\,Al + 3\,CuCl_2 \rightarrow 3\,Cu + 2\,AlCl_3$$

Calculate the maximum mass of copper produced in grams (g).

You should determine the limiting reactant.

Relative atomic masses (A_r): Al = 27 Cu = 63.5

Relative formula masses (M_r): $CuCl_2$ = 134.5 $AlCl_3$ = 133.5

[6 marks]

Limiting reactant is _____

Mass of copper = _____ g

Question 7 continues on the next page

5.1.1.1 Atoms, elements and compounds

Question 02 · continued

Sodium metal and sodium chloride are both able to conduct electricity.

0 7 . 5 Describe how sodium metal conducts electricity.

[2 marks]

0 7 . 6 Explain how sodium chloride can conduct electricity.

[3 marks]

17

5.1.1.1 Atoms, elements and compounds

Question 03

June 2023 | 8464/C/1H | Original Q4

0 4 Group 7 elements are known as the halogens.

All atoms of Group 7 elements contain protons, neutrons and electrons.

0 4 . 1 What is the order of discovery of the proton, neutron and electron?

[1 mark]

Tick (✓) **one** box.

electron → neutron → proton ☐

electron → proton → neutron ☐

neutron → proton → electron ☐

proton → electron → neutron ☐

0 4 . 2 **Table 1** shows the mass of a proton and of an electron.

Table 1

Name of particle	Mass in kg
Proton	1.673×10^{-27}
Electron	9.109×10^{-31}

Calculate how many times heavier a proton is than an electron.

[2 marks]

Times heavier a proton is than an electron = _____

Question 03 · continued

A bromine atom can be represented as $^{81}_{35}Br$.

0 4 . 3 What is the number of neutrons in this bromine atom?

[1 mark]

0 4 . 4 What is the number of electrons in a bromide **ion**?

[1 mark]

0 4 . 5 Chlorine has two isotopes.

Table 2 shows the percentage abundance of the two isotopes of chlorine.

Table 2

Isotope	Percentage (%) abundance
$^{35}_{17}Cl$	75.77
$^{37}_{17}Cl$	24.23

Calculate the relative atomic mass (A_r) of chlorine.

Give your answer to 2 decimal places.

[3 marks]

Relative atomic mass (2 decimal places) = _____

5.1.1.1 Atoms, elements and compounds

Question 03 · continued

0 4 . 6 **Figure 4** shows the outer shells in one molecule of chlorine (Cl_2).

Complete the dot and cross diagram to show the electrons in the outer shells.

[2 marks]

Figure 4

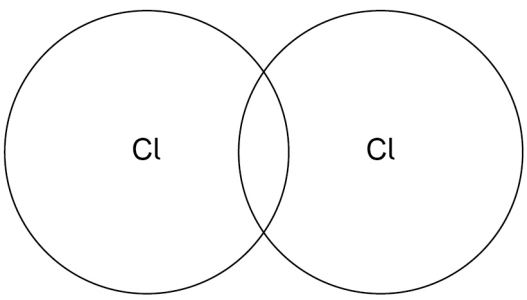

10

5.1.1.1 Atoms, elements and compounds

Question 04

June 2025 | 8464/C/1H | Original Q3

0 3 This question is about atoms, ions and elements.

0 3 . 1 **Figure 3** shows the results of the alpha particle scattering experiment.

In the experiment, alpha particles were fired at gold foil.

Alpha particles are positively charged.

Figure 3

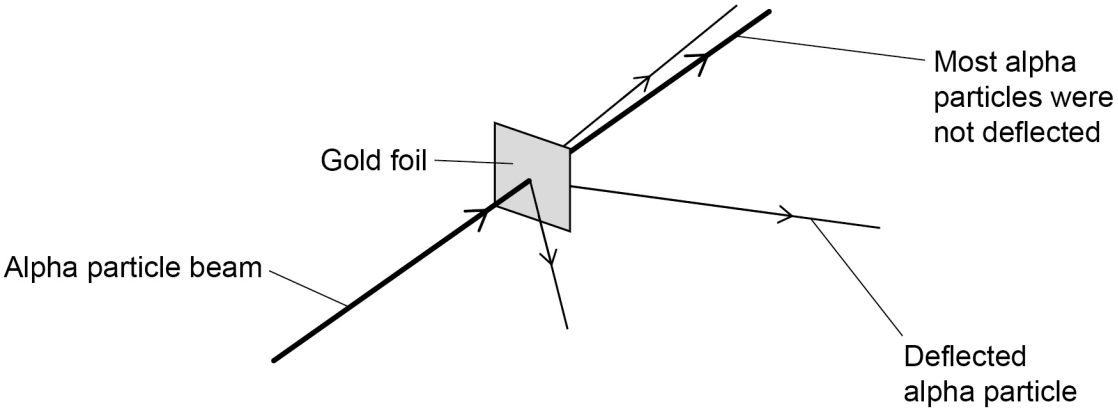

What **two** conclusions were made from the results?

[2 marks]

Tick (✓) **two** boxes.

- Atoms are very small. ☐
- Atoms have a charged nucleus. ☐
- Electrons orbit the nucleus at specific distances. ☐
- Isotopes of an element have a different number of neutrons. ☐
- The mass of an atom is concentrated in the nucleus. ☐

5.1.1.1 Atoms, elements and compounds

Question 04 · continued

Particle **X** consists of:

- 35 protons
- 44 neutrons
- 36 electrons.

0 3 . 2 Why is particle **X not** an atom?

Answer in terms of subatomic particles.

[1 mark]

0 3 . 3 Which is the correct representation of particle **X**?

Use the periodic table.

[1 mark]

Tick (✓) **one** box.

$^{79}_{35}Br^{+}$ ☐

$^{79}_{35}Br^{-}$ ☐

$^{79}_{35}Se^{+}$ ☐

$^{79}_{35}Se^{-}$ ☐

5.1.1.1 Atoms, elements and compounds

Question 04 · continued

Group 7 elements are known as the halogens.

0 3 . 4 **Table 2** shows the boiling points of some Group 7 elements.

Table 2

Element	Boiling point in °C
Fluorine	−188
Chlorine	−35
Bromine	59
Iodine	184

Explain the increase in the boiling points of the Group 7 elements going down the group.

[3 marks]

Question 3 continues on the next page

5.1.1.1 Atoms, elements and compounds

Question 04 · continued

0 3 . 5 Chlorine reacts with fluorine to form a compound with the formula ClF_3

What is the type of bonding in the compound ClF_3?

[1 mark]

0 3 . 6 Chlorine reacts with a solution of sodium bromide.

Complete the word equation for the reaction.

[1 mark]

chlorine + sodium bromide ⟶ _____ + _____

0 3 . 7 Explain why Group 7 elements become less reactive going down the group.

[3 marks]

12