AQA GCSE Combined Science - Trilogy | 8464

SPECIFICATION POINT 6.2.4.2

Energy transfers in everyday appliances

Past-paper questions

Tier	**Foundation**
Question groups	**8**
Available paper years	**2018–2024**

Using this booklet

1. Answer the questions in order and show your working.
2. Original question numbers and marks are retained.
3. Print at actual size (100%) for measuring questions.
4. Use the companion answer booklet to check your work.

Name: _____ **Date:** _____

Whole questions are retained for context, so some parts assess other specification points. Current and legacy sources are labelled. Continue on extra paper if needed.

6.2.4.2 Energy transfers in everyday appliances

Question 01

June 2018 | 8464/P/1F | Original Q2

0 2 **Figure 3** shows a mobile phone being recharged by a portable power source.

Figure 3



0 2 . 1 Why does the battery in the phone need recharging?

[1 mark]

Tick **one** box.

- The store of chemical energy in the battery has reduced. ☐
- The store of thermal energy in the battery has reduced. ☐
- The store of kinetic energy in the battery has reduced. ☐
- The store of gravitational energy in the battery has reduced. ☐

Question 2 continues on the next page

6.2.4.2 Energy transfers in everyday appliances

Question 01 · continued

0 2 . 2 The power source provides a current of 1.86 A at a potential difference of 3.90 V

Calculate the power of the power source.

Use the equation:

power = potential difference × current

Choose the correct unit from the box.

[3 marks]

C	J	W

Power = _____

Unit _____

6.2.4.2 Energy transfers in everyday appliances

Question 01 · continued

0 2 . 3 A student needs a new power source.

Figure 4 shows three different sized power sources.

Figure 4

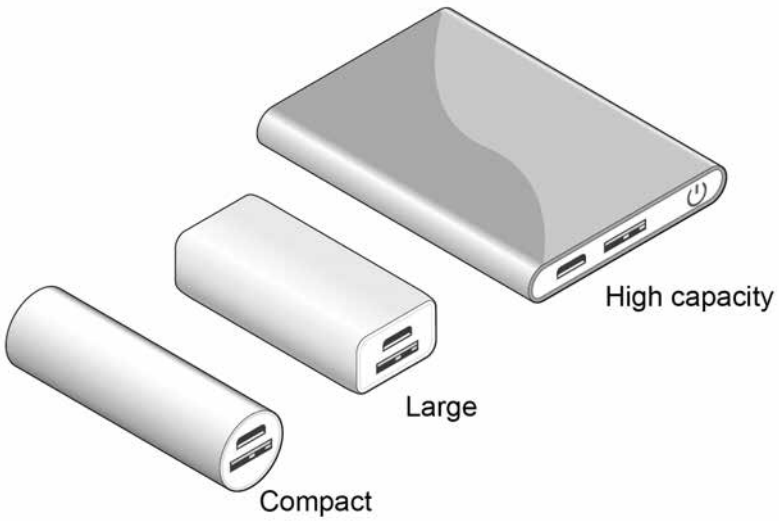

Table 1 gives data about the different power sources.

Table 1

Power source	Number of charges	Mass in grams
Compact	1	100
Large	5	200
High capacity	10	600

The student chose the large power source.

Suggest why the student chose the large power source.

[4 marks]

8

6.2.4.2 Energy transfers in everyday appliances

Question 02

June 2019 | 8464/P/1F | Original Q2

0 2 A student investigated how the area of a solar panel affected the output potential difference of the solar panel.

The student placed different sized solar panels under a lamp.

Figure 3 shows a solar panel under a lamp.

Figure 3



0 2 . 1 Which variable should be controlled?

[1 mark]

Tick (✓) **one** box.

The area of the solar panels ☐

The brightness of the lamp ☐

The output potential difference of the solar panels ☐

6.2.4.2 Energy transfers in everyday appliances

Question 02 · continued

0 2 . 2 The student measured the output potential difference using a voltmeter.

When the voltmeter was **not** connected, the reading on the voltmeter was 0.7 V

What name is given to this type of error?

[1 mark]

Tick (✓) **one** box.

Zero error ☐

Random error ☐

Measurement error ☐

Question 2 continues on the next page

Question 02 · continued

Table 1 shows the results of the investigation.

Table 1

Solar panel	Area of solar panel in cm^2	Output potential difference in volts			
		Test 1	Test 2	Test 3	Mean
A	10	2.5	2.4	2.6	2.5
B	20	5.0	5.0	4.9	5.0
C	30	7.5	11.9	7.5	7.5
D	50	12.4	12.6	12.5	12.5

0 2 . 3 The readings for which solar panel show an anomalous result?

[1 mark]

Tick (✓) **one** box.

A ☐ **B** ☐ **C** ☐ **D** ☐

0 2 . 4 The student did **not** have a solar panel with an area of 40 cm^2

Determine the most likely value for the mean output potential difference of a 40 cm^2 solar cell.

[1 mark]

Mean output potential difference = _____ V

6.2.4.2 Energy transfers in everyday appliances

Question 02 · continued

0 2 . 5 The total input energy transfer to one of the solar panels was 8.0 joules.

The useful output energy transfer was 0.96 joules.

Calculate the efficiency of the solar panel.

Use the equation:

$$\text{efficiency} = \frac{\text{useful output energy transfer}}{\text{total input energy transfer}}$$

[2 marks]

Efficiency = _____

0 2 . 6 Solar power is a renewable energy resource.

Complete the sentence.

Choose the answer from the box.

[1 mark]

burned	**replenished**	**consumed**

A renewable energy resource is one that is _____ as it is used.

Question 2 continues on the next page

6.2.4.2 Energy transfers in everyday appliances

Question 02 · continued

0 2 . 7 Some homes have solar panels which generate electricity.

On a sunny day the potential difference across a solar panel is 31 volts.

A charge of 490 coulombs flows through the solar panel.

Calculate the energy transferred by the solar panel.

Use the equation:

energy transferred = charge flow × potential difference

Give your answer to 2 significant figures.

[3 marks]

Energy transferred = _____ J

0 2 . 8 Why do solar panels on homes help reduce the environmental impact of using electrical devices?

[1 mark]

Tick (✓) **one** box.

Less electricity is used in the home. ☐

Less fossil fuel is burned. ☐

The electricity from the solar panels is cheaper. ☐

11

6.2.4.2 Energy transfers in everyday appliances

Question 03

June 2019 | 8464/P/1F | Original Q5

0 5 **Figure 7** shows a toaster.

Figure 7

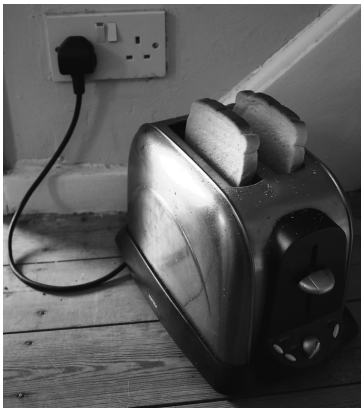

The toaster is connected to the mains supply using a three-core cable.

0 5 . 1 What is the function of the earth wire inside the cable?

[1 mark]

Tick (✓) **one** box.

To carry the current from the supply to the toaster ☐

To complete the circuit in the toaster ☐

To melt if a fault occurs inside the toaster ☐

To stop the metal case of the toaster becoming live if a fault occurs ☐

0 5 . 2 Complete the sentences.

Choose answers from the box.

[3 marks]

blue	**brown**	**orange**	**white**	**yellow**

The insulation around the earth wire is green and _____ .

The insulation around the live wire is _____ .

The insulation around the neutral wire is _____ .

6.2.4.2 Energy transfers in everyday appliances

Question 03 · continued

0 5 . 3 The toaster is switched on for 120 seconds.

The power of the toaster is 850 watts.

Calculate the energy transferred by the toaster.

Use the equation:

energy transferred = power × time

[2 marks]

Energy transferred = _____ J

0 5 . 4 Complete the sentences.

Choose answers from the box.

[2 marks]

chemical	**elastic potential**	**kinetic**	**thermal**

When bread is lowered into the toaster, a spring is stretched. The stretched spring stores _____ energy.

After the bread is toasted, the spring makes the toast move upwards. As the speed of the toast increases, the _____ energy of the toast increases.

6.2.4.2 Energy transfers in everyday appliances

Question 03 · continued

June 2019 | 8464/P/1F | Original Q5

0 5 . 5 Write the equation which links gravitational field strength, gravitational potential energy, height and mass.

[1 mark]

0 5 . 6 The toast was moved upwards by the spring.

The change in gravitational potential energy of the toast was 0.049 J

The mass of the toast was 0.050 kg

gravitational field strength = 9.8 N/kg

Calculate the change in height of the toast.

[3 marks]

Change in height = _____ m

12

6.2.4.2 Energy transfers in everyday appliances

Question 04

November 2020 | 8464/P/1F | Original Q3

0 3 An eco-house is designed to be environmentally friendly.

Figure 4 shows a picture of an eco-house.

Figure 4

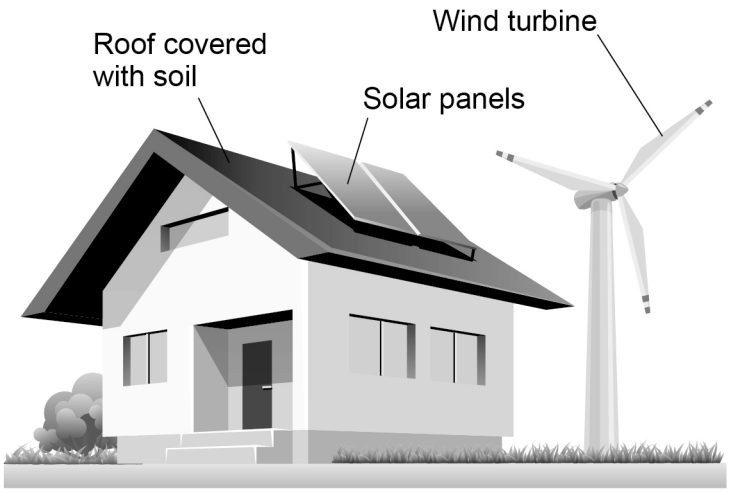

0 3 . 1 The solar panels and a wind turbine are used to generate electricity for the eco-house.

Solar and wind are both renewable energy resources.

What does renewable energy resource mean?

[1 mark]

Tick (✓) **one** box.

- It can be replenished as it is used. ☐
- It is unreliable. ☐
- It has no fuel costs. ☐
- It produces no greenhouse gases. ☐

6.2.4.2 Energy transfers in everyday appliances

Question 04 · continued

0 3 . 2 Biomass, nuclear and natural gas are three other energy resources.

Complete the table to show whether each energy resource is renewable or non-renewable.

[2 marks]

Tick (✓) **one** box for **each** energy resource.

Energy resource	Renewable	Non-renewable
Biomass		
Nuclear		
Natural gas		

0 3 . 3 Moving air makes the wind turbine spin.

The wind turbine generates electricity which is used to charge a battery.

Complete the sentences.

Choose answers from the box.

[2 marks]

chemical	electrical	gravitational	kinetic

When the wind turbine spins faster there is an increase in its _____ energy.

Charging the battery increases the _____ store of energy of the battery.

Question 3 continues on the next page

Question 04 · continued

0 3 . 4 The roof of the eco-house is covered with soil.

Covering the roof with soil decreases the thermal conductivity of the roof.

What are the advantages of having a roof with a lower thermal conductivity?

[2 marks]

Tick (✓) **two** boxes.

- Less energy is needed to heat the house. ☐
- The rate of energy transfer by conduction is greater. ☐
- The roof is a better insulator. ☐
- The roof is less likely to leak. ☐
- Weather will have a greater effect on the temperature of the house. ☐

0 3 . 5 The average power transferred to the solar panels by sunlight is 26 000 W

Calculate the average energy transferred to the solar panels in 30 seconds.

Use the equation:

energy transferred = power × time

[2 marks]

Average energy transferred to solar panels = _____ J

6.2.4.2 Energy transfers in everyday appliances

Question 04 · continued

0 3 . 6 Write down the equation that links efficiency, total power input and useful power output.

[1 mark]

0 3 . 7 The solar panels on the roof of the eco-house have an efficiency of 0.15

The average power input to the solar panels is 26 000 W

Calculate the average useful power output from the solar panels.

[3 marks]

Average useful power output = _____ W

0 3 . 8 Explain why it is a good idea for the eco-house to have both a wind turbine and solar panels.

[2 marks]

15

6.2.4.2 Energy transfers in everyday appliances

Question 05

November 2021 | 8464/P/1F | Original Q5

0 5 **Figure 9** shows a mobile phone with its battery removed.

Figure 9



A student measured the potential difference across the battery and then put the battery into the phone.

0 5 . 1 What is the equation linking current (I), potential difference (V) and resistance (R)?

[1 mark]

Tick (✓) **one** box.

- $I = V\ R$ ☐
- $R = I\ V$ ☐
- $V = I\ R$ ☐
- $V = I^2\ R$ ☐

Question 5 continues on the next page

6.2.4.2 Energy transfers in everyday appliances

Question 05 · continued

0 5 . 2 The current in the electronic circuit in the mobile phone was 0.12 A.

The potential difference across the battery was 3.9 V.

Calculate the resistance of the electronic circuit in the mobile phone.

[3 marks]

Resistance = _____ Ω

6.2.4.2 Energy transfers in everyday appliances

Question 05 · continued

0 5 . 3 Write down the equation which links energy (E), power (P) and time (t).

[1 mark]

0 5 . 4 The battery was fully charged when it was put into the mobile phone.

The battery discharged when the mobile phone was switched on.

The average power output of the battery as it discharged was 0.46 watts.

The time taken to fully discharge the battery was 2500 minutes.

Calculate the energy transferred by the battery.

[3 marks]

Energy transferred = _____ J

Question 5 continues on the next page

6.2.4.2 Energy transfers in everyday appliances

Question 05 · continued

The mobile phone includes a sensor to monitor the temperature of the battery.

Figure 10 shows the circuit symbol for a component used in the sensor.

Figure 10

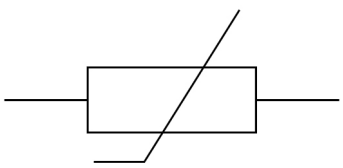

0 5 . 5 What component does the circuit symbol shown in **Figure 10** represent?

[1 mark]

0 5 . 6 The temperature of the component in **Figure 10** increases.

The potential difference across the component remains constant.

Explain what happens to the current in the component.

[2 marks]

11

6.2.4.2 Energy transfers in everyday appliances

Question 06

June 2022 | 8464/P/1F | Original Q6

0 6 A student made measurements to determine the specific heat capacity of vegetable oil.

Figure 10 shows the equipment used.

Figure 10

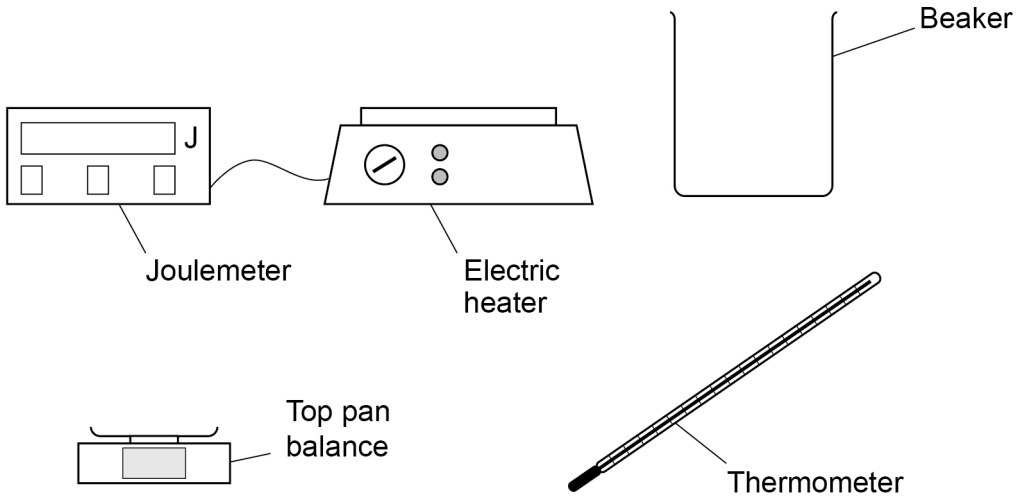

0 6 . 1 Describe how the student could use the equipment shown in **Figure 10** to determine the specific heat capacity of vegetable oil.

[6 marks]

6.2.4.2 Energy transfers in everyday appliances

Question 06 · continued

0 6 . 2 Give **one** risk when using the equipment in **Figure 10**.

[1 mark]

A different student did not have a joulemeter and calculated the energy transferred by the electric heater.

Use the Physics Equations Sheet to answer questions **06.3** and **06.4**.

0 6 . 3 Write down the equation linking energy transferred (*E*), power (*P*) and time (*t*).

[1 mark]

0 6 . 4 The electric heater had a power output of 50 watts.

Calculate the time taken for the electric element to transfer 4750 joules of energy to the vegetable oil.

[3 marks]

Time taken = _____ s

Question 6 continues on the next page

Question 06 · continued

In a deep fryer, vegetable oil is heated by an electric heating element. Food is then cooked in the hot vegetable oil.

The deep fryer contains an electrical component to monitor the temperature of the vegetable oil.

Figure 11 shows how the resistance of this electrical component changes with temperature.

Figure 11

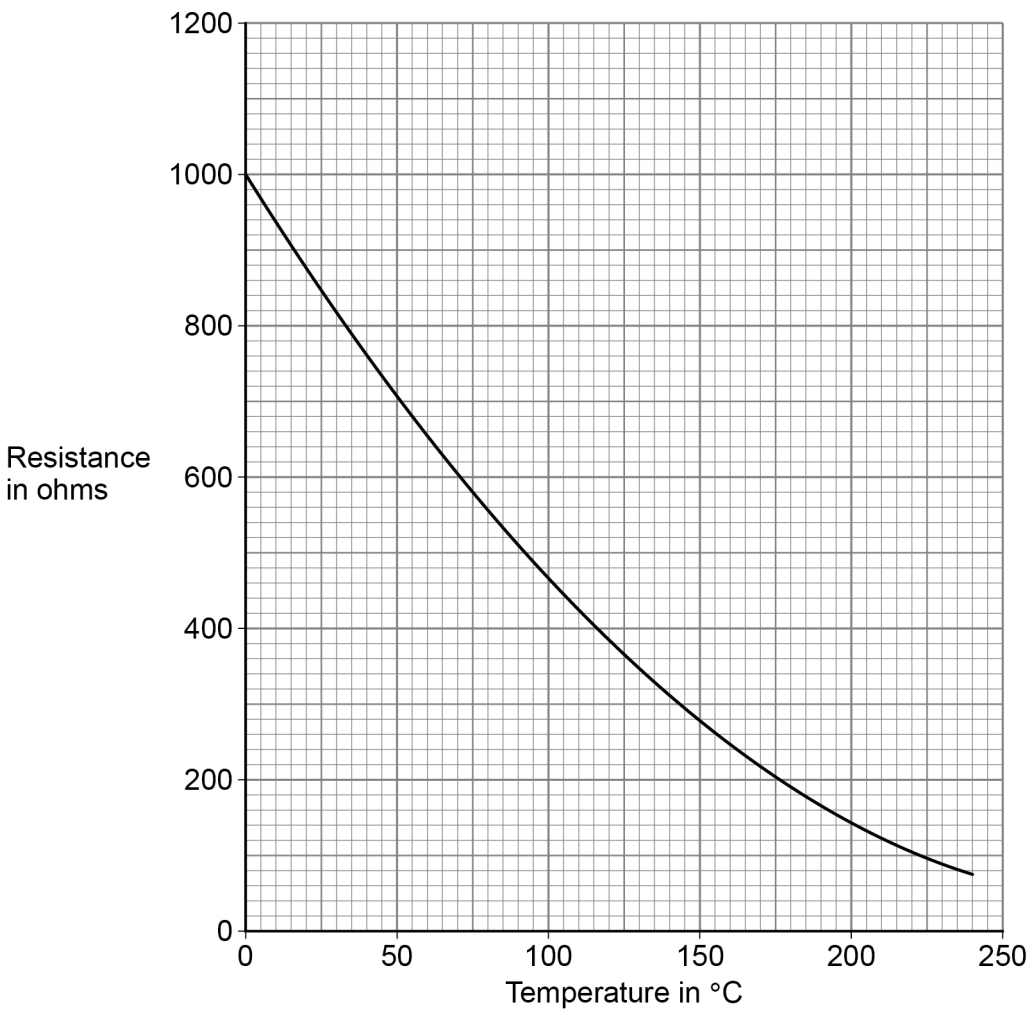

0 6 . 5 What electrical component is used to monitor the temperature of the vegetable oil?

[1 mark]

0 6 . 6 The electric heating element in the deep fryer automatically switches off when the vegetable oil reaches a certain temperature.

Figure 12 shows how the temperature of the vegetable oil changed after the deep fryer was switched on.

Figure 12

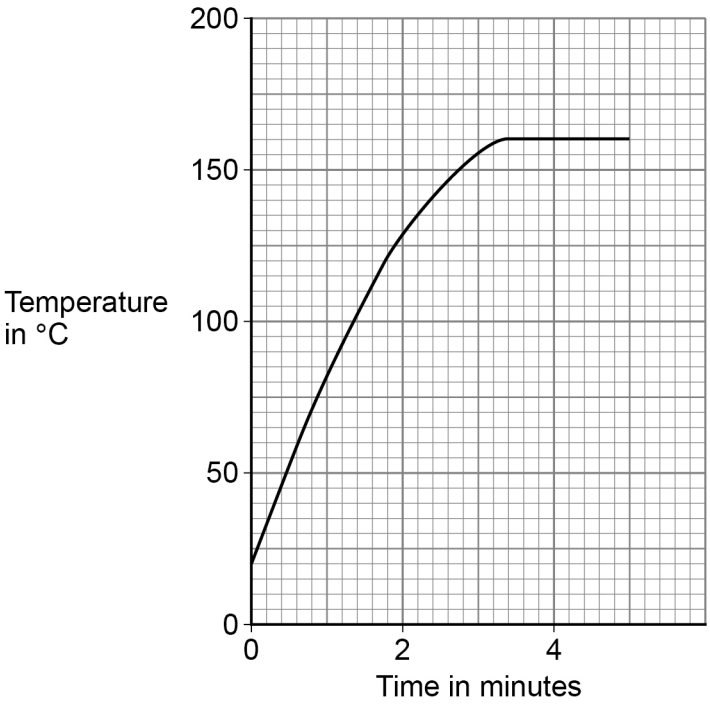

Determine the resistance of the electrical component when the electric heating element automatically switched off.

Use **Figure 11** and **Figure 12**.

[2 marks]

Resistance = _____ Ω

Question 6 continues on the next page

6.2.4.2 Energy transfers in everyday appliances

Question 06 · continued June 2022 | 8464/P/1F | Original Q6

0 6 . 7 Some chips were put in the deep fryer.

In the deep fryer, water in the chips underwent a physical change and became steam.

Why is this a physical change?

[1 mark]

Tick (✓) **one** box.

All water can change to steam. ☐

No chemicals are involved when water changes to steam. ☐

The change from water to steam can be detected visually. ☐

The water will recover its original properties if the steam is cooled. ☐

15

6.2.4.2 Energy transfers in everyday appliances

Question 07

June 2024 | 8464/P/1F | Original Q1

0 1 **Figure 1** shows a circuit diagram. The circuit contains a battery and two lamps, **X** and **Y**.

Figure 1

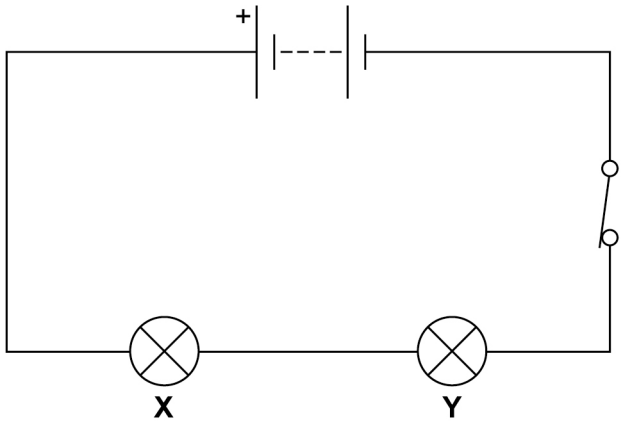

0 1 . 1 How does the current in lamp **X** compare with the current in lamp **Y**?

[1 mark]

Tick (✓) **one** box.

The current in lamp **X** is smaller. ☐

The current in both lamps is the same. ☐

The current in lamp **X** is greater. ☐

0 1 . 2 Lamp **X** and lamp **Y** are **not** identical.

The potential difference across the battery is 4.5 V.

The potential difference across lamp **X** is 1.5 V.

Calculate the potential difference across lamp **Y**.

[1 mark]

Potential difference across lamp **Y** = _____ V

6.2.4.2 Energy transfers in everyday appliances

Question 07 · continued

The current in lamp **X** is 1.2 A.

The potential difference across lamp **X** is 1.5 V.

0 1 . 3 Calculate the power of lamp **X**.

Use the equation:

power = potential difference × current

[2 marks]

Power = _____ W

0 1 . 4 Calculate the resistance of lamp **X**.

Use the equation:

$$\text{resistance} = \frac{\text{potential difference}}{\text{current}}$$

[2 marks]

Resistance = _____ Ω

Question 1 continues on the next page

6.2.4.2 Energy transfers in everyday appliances

Question 07 · continued

0 1 . 5 The current in lamp **X** is 1.2 A.

Calculate the charge flow through lamp **X** in 40 seconds.

Use the equation:

charge flow = current × time

[2 marks]

Charge flow = _____ C

0 1 . 6 The switch can be used to turn the lamps on and off.

Immediately after the lamps are switched on, the resistance of each lamp increases.

Why does the resistance of each lamp increase?

[1 mark]

Tick (✓) **one** box.

- The current in the battery decreases. ☐
- The potential difference across each lamp decreases. ☐
- The power of the battery increases. ☐
- The temperature of each lamp increases. ☐

6.2.4.2 Energy transfers in everyday appliances

Question 07 · continued

Figure 1 is repeated below.

Figure 1

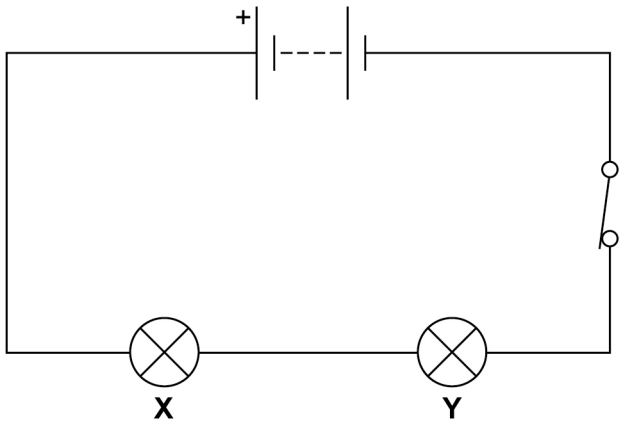

0 1 . 7 Lamp **Y** breaks.

What happens to lamp **X**?

Give a reason for your answer.

[2 marks]

Tick (✓) **one** box.

Lamp **X** gets brighter. ☐

Lamp **X** stays the same brightness. ☐

Lamp **X** no longer emits light. ☐

Reason _____

_____

11

6.2.4.2 Energy transfers in everyday appliances

Question 08

0 6 **Figure 10** shows an electric whisk that plugs into the mains electricity supply.

The whisk can mix food by spinning a beater.

Figure 10

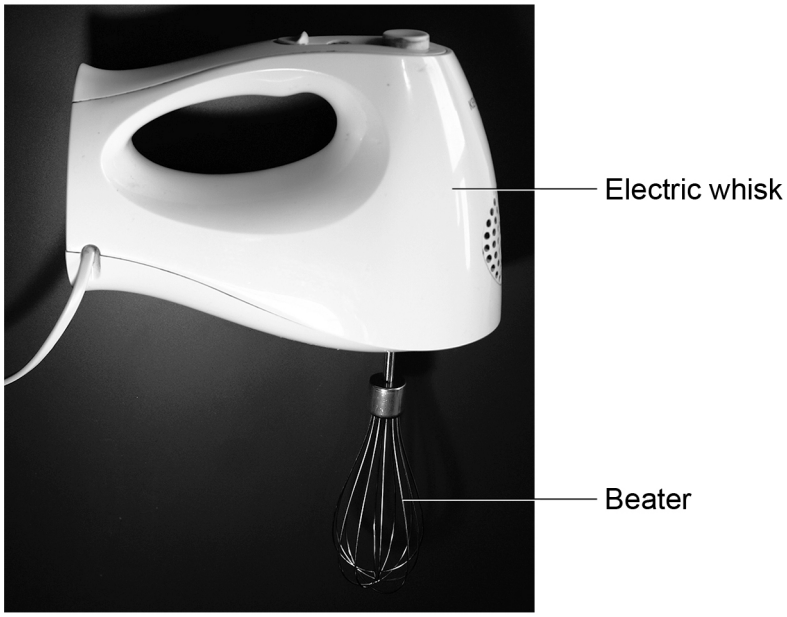

0 6 . 1 Give **two** energy stores that increase when the whisk is switched on.

[2 marks]

1 _____

_____

2 _____

_____

6.2.4.2 Energy transfers in everyday appliances

Question 08 · continued

Use the Physics Equations Sheet to answer questions **06.2** and **06.3**.

0 6 . 2 Work is done by the whisk when it is used to mix food.

Write down the equation that links power (*P*), time (*t*) and work done (*W*).

[1 mark]

0 6 . 3 The power output of the whisk is 92 W.

Calculate the time for the whisk to do 23 000 J of work.

[3 marks]

Time = _____ s

Question 6 continues on the next page

6.2.4.2 Energy transfers in everyday appliances

Question 08 · continued

Use the Physics Equations Sheet to answer questions **06.4** and **06.5**.

0 6 . 4 Which equation links current (I), power (P) and resistance (R)?

[1 mark]

Tick (✓) **one** box.

$P = \frac{I}{R^2}$ ☐

$P = I R^2$ ☐

$P = \frac{I^2}{R}$ ☐

$P = I^2 R$ ☐

0 6 . 5 The current in the whisk is 500 mA.

The resistance of the whisk is 640 Ω.

Calculate the power of the whisk.

[3 marks]

Power = _____ W

6.2.4.2 Energy transfers in everyday appliances

Question 08 · continued

The whisk has several settings that allow the beater to spin at different speeds.

A faster beater speed needs a greater power input from the mains electricity supply.

0 6 . 6 What is the potential difference between the live wire and neutral wire in the mains electricity supply?

[1 mark]

_____ V

0 6 . 7 Changing the beater speed does **not** change the potential difference between the live wire and neutral wire.

The power input to the whisk changes because the current in the whisk changes.

Complete the sentence.

[1 mark]

When the beater speed increases, the current in the whisk increases because the resistance of the whisk _____.

12