AQA GCSE Physics | 8463

SPECIFICATION POINT 4.7.3.4

Transformers (HT only)

Past-paper questions

Tier	**Higher**
Question groups	**38**
Available paper years	**2004–2025**

Using this booklet

1. Answer the questions in order and show your working.
2. Original question numbers and marks are retained.
3. Print at actual size (100%) for measuring questions.
4. Use the companion answer booklet to check your work.

Name: _____ **Date:** _____

Whole questions are retained for context, so some parts assess other specification points. Current and legacy sources are labelled. Continue on extra paper if needed.

4.7.3.4 Transformers (HT only)

Question 01

June 2004 | 3451H | Original Q13 | Legacy

13 (a) The diagram shows a 12 volt lighting system. Each lamp has a power of 32 watts.

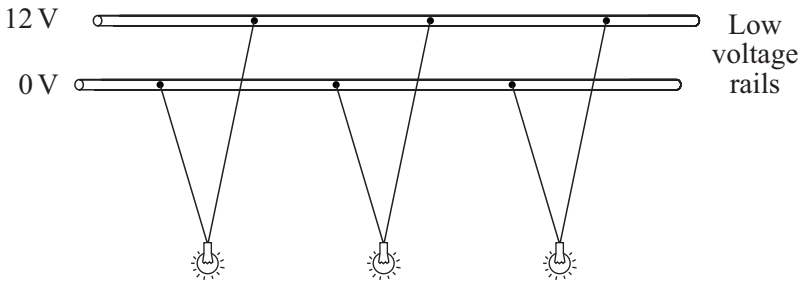

(i) Write down the equation that links current, potential difference and power.

.....

(1 mark)

(ii) Calculate the input current to the lighting system. Show clearly how you work out your answer.

.....

.....

current =.....A

(2 marks)

(b) A transformer is used to reduce the 230 V a.c. mains to the 12 V supply required for the lighting system. The transformer has 1150 turns on its primary coil.

(i) Write down the equation which links the number of turns of each transformer coil to the voltage across each transformer coil.

.....

.....

(1 mark)

(ii) Calculate the number of turns on the secondary coil of the transformer. Show clearly how you work out your answer.

.....

.....

.....

number of turns on the secondary coil =.....

(2 marks)

6

4.7.3.4 Transformers (HT only)

Question 02

June 2004 | 3462H3 | Original Q11 | Legacy

11 (a) The diagram shows a 12 volt lighting system. Each lamp has a power of 32 watts.

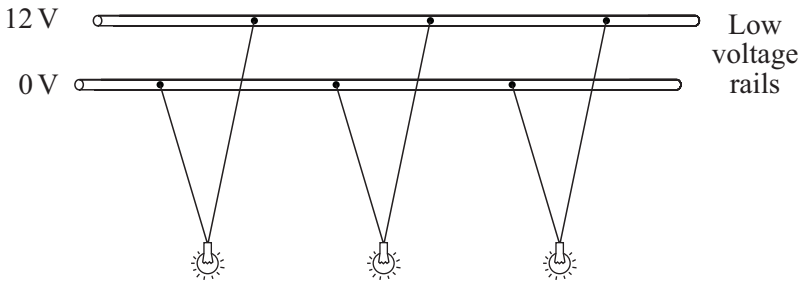

(i) Write down the equation that links current, potential difference and power.

.....

(1 mark)

(ii) Calculate the input current to the lighting system. Show clearly how you work out your answer.

.....

.....

current =.....A

(2 marks)

(b) A transformer is used to reduce the 230 V a.c. mains to the 12 V supply required for the lighting system. The transformer has 1150 turns on its primary coil.

(i) Write down the equation which links the number of turns of each transformer coil to the voltage across each transformer coil.

.....

.....

(1 mark)

(ii) Calculate the number of turns on the secondary coil of the transformer. Show clearly how you work out your answer.

.....

.....

.....

number of turns on the secondary coil =.....

(2 marks)

6

4.7.3.4 Transformers (HT only)

Question 03

November 2006 | PHY1A | Original Q5 | Legacy

QUESTION FIVE

New power stations need to be built soon – says report

This question is about the production and distribution of electricity. In many types of power station, heat is produced.

5A In a power station which uses plutonium, what is the process which produces this heat?

1 chemical reaction

2 combustion

3 nuclear fission

4 nuclear fusion

5B In a heat-producing power station, what is the heat used for?

1 to boil oil

2 to boil water

3 to power a generator

4 to power a turbine

5C In **most** power stations in the UK, most of the waste heat . . .

1 is recycled.

2 is released to the surroundings.

3 is transformed into electricity.

4 is used to heat neighbouring buildings.

4.7.3.4 Transformers (HT only)

5D Step-up transformers are used in the National Grid to . . .

1 increase the current.

2 increase the efficiency of the system.

3 increase safety.

4 increase the speed of the transmission.

Turn over for the next question

4.7.3.4 Transformers (HT only)

Question 04

3 The diagram shows how electricity is distributed from power stations to consumers.

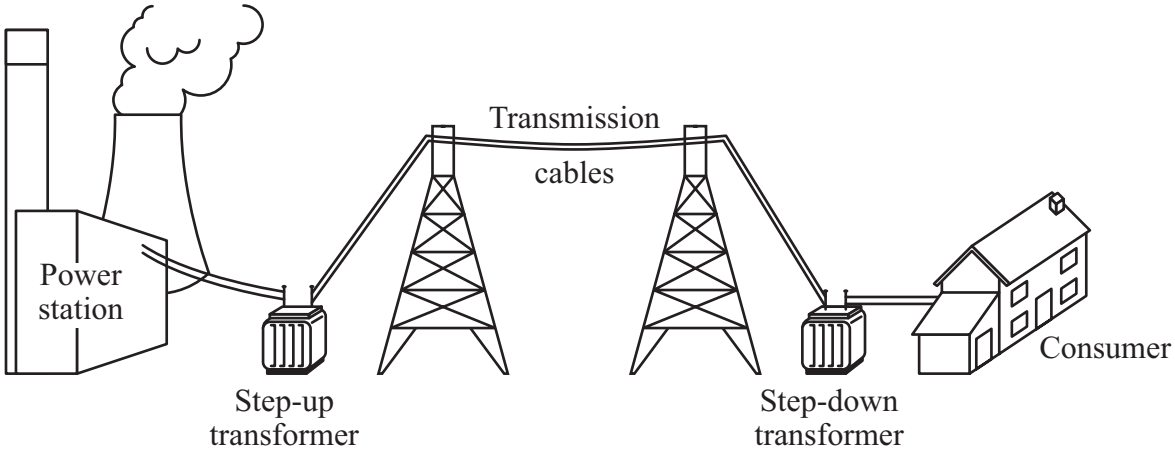

(a) (i) What name is given to the network of cables and transformers that links power stations to consumers?

.....

(1 mark)

(ii) What does a step-up transformer do?

.....

(1 mark)

(iii) Explain why step-up transformers are used in the electricity distribution system.

.....

.....

.....

.....

(2 marks)

(b) Most of the world's electricity is generated in power stations that burn fossil fuels.

State **one** environmental problem that burning fossil fuels produces.

.....

.....

(1 mark)

Question 04 · continued

BLANK

(c) Electricity can be generated using energy from the wind. A company wants to build a new wind farm. Not everyone thinks that this is a good idea.



(i) What arguments could the company give to persuade people that a wind farm is a good idea?

.....

.....

.....

.....

(2 marks)

(ii) What reasons may be given by the people who think that wind farms are **not** a good idea?

.....

.....

.....

.....

(2 marks)

9

4.7.3.4 Transformers (HT only)

Question 05

November 2007 | PHY1A | Original Q8 | Legacy

QUESTION EIGHT

Transformers are used in the National Grid.

8A Two types of transformer are used in various parts of the National Grid.

Which row in the table shows the correct locations of the two types of transformer?

	Between generators and power lines	Between power lines and substation	Between substation and people's homes
1	step-down	step-down	step-up
2	step-down	step-up	step-up
3	step-up	step-down	step-down
4	step-up	step-up	step-down

8B Transformers alter the potential difference across the power lines and the current through the power lines. These changes affect the efficiency of the power lines.

Which row in the table is correct?

	Potential difference across power lines	Current through power lines	Efficiency of transmission
1	decreased	decreased	decreased
2	decreased	increased	increased
3	increased	decreased	increased
4	increased	increased	increased

4.7.3.4 Transformers (HT only)

Question 05 · continued

8C The table shows the percentage of energy wasted as heat and sound by four different transformers.

Which transformer has the highest efficiency?

Transformer	Percentage of energy supplied to transformer which is wasted as sound	Percentage of energy supplied to transformer which is wasted as heat
1	1.1	7.4
2	1.2	4.7
3	1.3	5.4
4	1.4	6.9

8D The amount of electricity that a device transforms depends on the rate at which the device transforms energy and . . .

1 how long the device is switched on.

2 the current through the device.

3 the potential difference across the device.

4 the power of the device.

4.7.3.4 Transformers (HT only)

Question 06

January 2008 | PHY1H | Original Q1 | Legacy

1 (a) The diagram shows the energy transformations in a fuel burning power station.

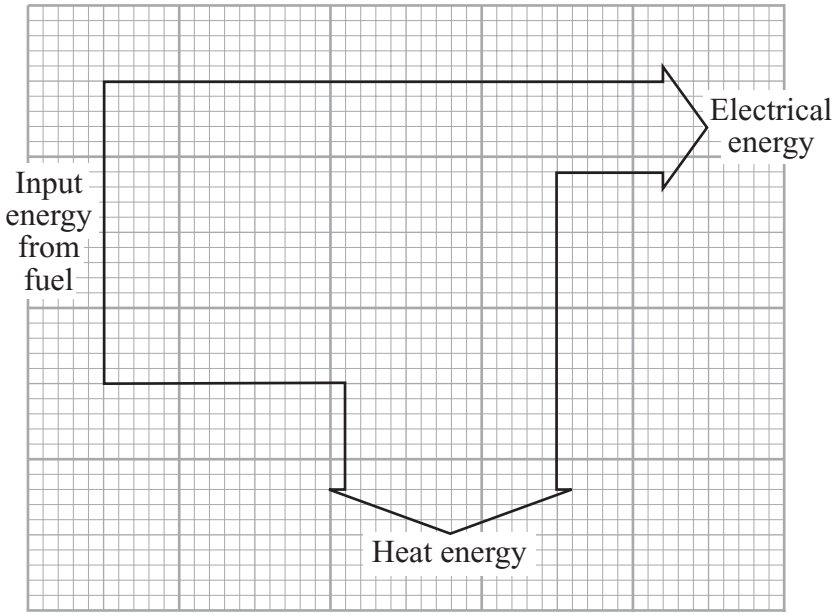

(i) Name **one** fuel that is burned to provide the energy source for a power station.

.....

(1 mark)

(ii) Use the diagram and the equation in the box to calculate the efficiency of the power station.

$$\text{efficiency} = \frac{\text{useful energy transferred by the device}}{\text{total energy supplied to the device}}$$

Show clearly how you work out your answer.

.....

.....

Efficiency = ...

(2 marks)

(iii) Name the process by which a nuclear fuel provides the energy needed to generate electricity in a nuclear power station.

.....

(1 mark)

Question 1 continues on the next page

4.7.3.4 Transformers (HT only)

Question 06 · continued

BLANK

(b) Electricity is distributed from power stations to consumers along the National Grid.

(i) Transformers are part of the National Grid. Transformers are *efficient* devices.

What is meant by a device being *efficient*?

.....

.....

(1 mark)

(ii) When electricity flows through a cable, some energy is transformed into heat.

Explain how the National Grid system reduces the amount of energy lost as heat.

.....

.....

.....

.....

(2 marks)

(c) Read this information taken from a recent newspaper article.

- Researchers have found that children living close to overhead power cables are more likely to develop leukaemia.
- The researchers studied two groups of children. One group had developed leukaemia, the other group was healthy.
- Although the researchers found a link, they are unable to explain why it happened. They say that the results may have happened by chance.
- Other factors that have not been investigated, such as the environment, the geographical area or the children's genes, could be important.
- A cancer research charity said that childhood leukaemia was most likely to be caused by factors that parents were unable to control.

(i) Why did the researchers study a group of healthy children?

.....

.....

(1 mark)

4.7.3.4 Transformers (HT only)

Question 06 · continued

BLANK

(ii) The information does not say how many children were studied.

Why should this data have been included in the article?

.....

.....

(1 mark)

(iii) The researchers could not be certain that the overhead power cables were responsible for the increased chance of children developing leukaemia.

Explain why.

.....

.....

.....

.....

(2 marks)

(iv) The results of the research carried out by scientists may worry some people.

What do you think scientists should do?

Put a tick (✓) in the box next to your choice.

Scientists should publish their research findings straight away. ☐

Scientists should not publish their research findings until they have found out as many facts as possible. ☐

Give a reason for your choice.

.....

.....

(1 mark)

12

4.7.3.4 Transformers (HT only)

Question 07

6 (a) The diagram shows a transformer.

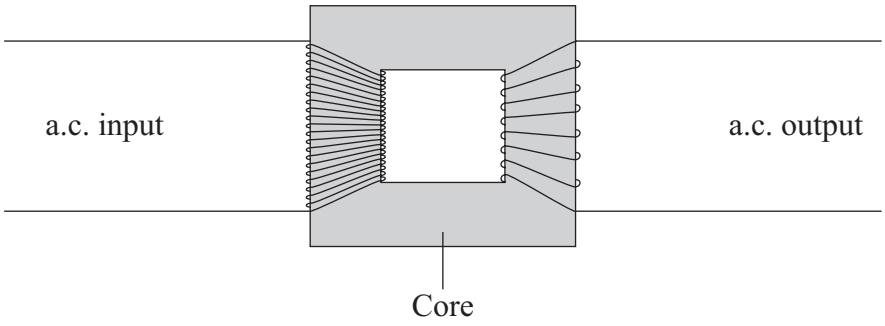

(i) Is the transformer in the diagram being used as a step-up transformer or as a step-down transformer?

Put a tick (✓) in the box next to your answer.

a step-up transformer ☐

a step-down transformer ☐

Explain your answer.

.....

.....

(1 mark)

(ii) Why is insulated wire, and not uninsulated wire, used to make the coils?

.....

.....

(1 mark)

(iii) Why is the core made of iron?

.....

.....

(1 mark)

4.7.3.4 Transformers (HT only)

Question 07 · continued

BLANK

(b) A transformer has 500 turns on its primary coil and 7500 turns on its secondary coil. The potential difference across the primary coil is 150 volts.

Use the equation in the box to calculate the potential difference across the secondary coil.

$$\frac{\text{p.d. across primary}}{\text{p.d. across secondary}} = \frac{\text{number of turns on primary}}{\text{number of turns on secondary}}$$

Show clearly how you work out your answer.

.....

.....

.....

Potential difference across the secondary coil = ... volts

(2 marks)

(c) Step-down transformers are used between power lines and people's houses.

Explain why.

.....

.....

.....

(2 marks)

(d) Before 1926, large towns had their own local power stations. After 1926, these power stations were connected to form the National Grid.

Explain the advantage of having a National Grid system.

.....

.....

.....

.....

(2 marks)

9

4.7.3.4 Transformers (HT only)

Question 08

March 2008 | PHY1AP | Original Q1 | Legacy

QUESTION ONE

The block diagram shows how electricity is distributed in this country.

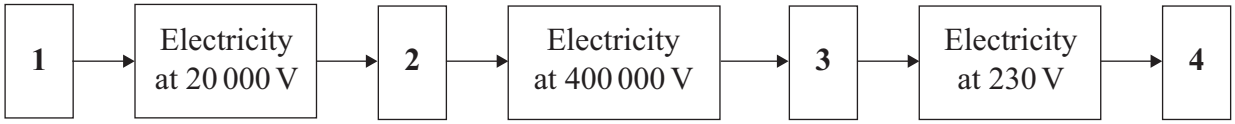

Match words, **A**, **B**, **C** and **D**, with the numbers **1–4** in the diagram.

A house

B power station

C step-down transformer

D step-up transformer

4.7.3.4 Transformers (HT only)

Question 09

6 (a) This notice is on the back of a television set.



The transformer used in the television set has 75 turns on its primary coil. The potential difference (p.d.) across the primary coil is 230 volts and the p.d. across the secondary coil is 32 200 volts.

Use the equation in the box to calculate the number of turns on the secondary coil.

$$\frac{\text{p.d. across primary}}{\text{p.d. across secondary}} = \frac{\text{number of turns on primary}}{\text{number of turns on secondary}}$$

Show clearly how you work out your answer.

.....

.....

.....

Number of turns on the secondary coil = ...

(2 marks)

4.7.3.4 Transformers (HT only)

Question 09 · continued

for mark

6 (b) The diagram shows the structure of a transformer.

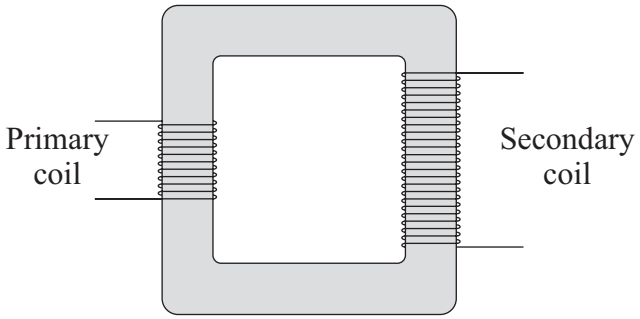

Explain how the transformer works.

.....

.....

.....

.....

.....

.....

(3 marks)

5

4.7.3.4 Transformers (HT only)

Question 10

January 2009 | PHY3H | Original Q3 | Legacy

3 (a) The basic structure of a transformer is a primary coil of insulated wire, an iron core and a secondary coil of insulated wire.

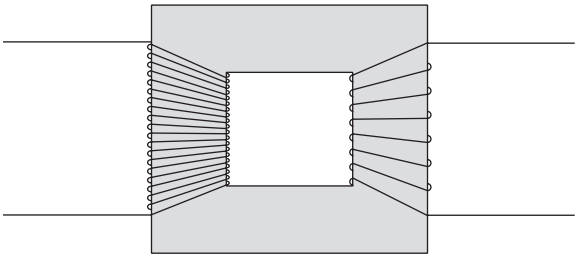

3 (a) (i) Why is the core made of iron?

.....

.....

(1 mark)

3 (a) (ii) Explain how a transformer works.

.....

.....

.....

.....

.....

.....

.....

.....

(4 marks)

4.7.3.4 Transformers (HT only)

Question 10 · continued

for mark

3 (b) A small step-down transformer is used in the charger for an electric screwdriver.

The input to the transformer is 230 V a.c. mains supply and the output is 5.75 V a.c. There are 3200 turns on the primary coil.

Use the equation in the box to calculate the number of turns on the transformer's secondary coil.

$$\frac{\text{p.d. across primary}}{\text{p.d. across secondary}} = \frac{\text{number of turns on primary}}{\text{number of turns on secondary}}$$

Show clearly how you work out your answer.

.....

.....

Number of turns = ...

(2 marks)

7

4.7.3.4 Transformers (HT only)

Question 11

March 2009 | PHY1AP | Original Q2 | Legacy

QUESTION TWO

This question is about power stations and the distribution of electricity.

Match words, **A**, **B**, **C** and **D**, with the numbers **1–4** in the sentences.

A generator

B grid

C transformer

D turbine

In most power stations, steam is used to drive a . . . **1** . . . .

Electricity is produced at a power station by a . . . **2** . . . .

The voltage of the electricity is stepped up by a . . . **3** . . . .

Electricity is transferred from the power station to our homes by the national . . . **4** . . . .

4.7.3.4 Transformers (HT only)

Question 12

June 2009 | PHY1AP | Original Q5 | Legacy

QUESTION FIVE

The diagram shows how electricity is distributed from a coal-fired power station to consumers.

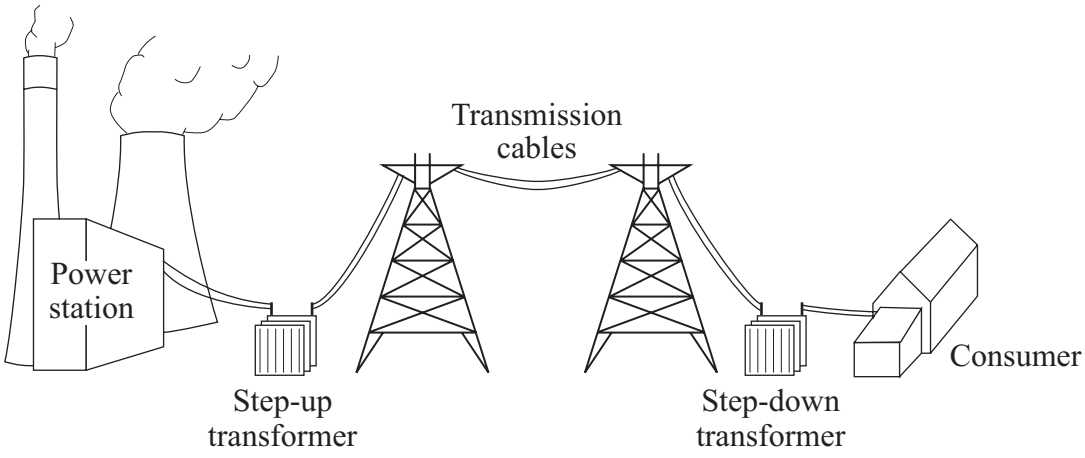

5A Which row in the table shows what happens at the step-up transformer?

	Current	Voltage
1	decreased	decreased
2	decreased	increased
3	increased	decreased
4	increased	increased

5B The purpose of the step-up transformer is to . . .

1 allow the electricity to travel further.

2 increase the speed of the electricity through the cables.

3 reduce energy losses from the cables.

4 reduce vibrations in the cables.

4.7.3.4 Transformers (HT only)

Question 12 · continued

5C Which one of the following power stations has the shortest start-up time?

1 coal

2 gas

3 nuclear

4 oil

5D Which of these fuels undergoes nuclear fission to produce heat in a power station?

1 coal

2 gas

3 oil

4 uranium

Turn over for the next question

4.7.3.4 Transformers (HT only)

Question 13

June 2009 | PHY3H | Original Q1 | Legacy

1 (a) The diagram shows a transformer.

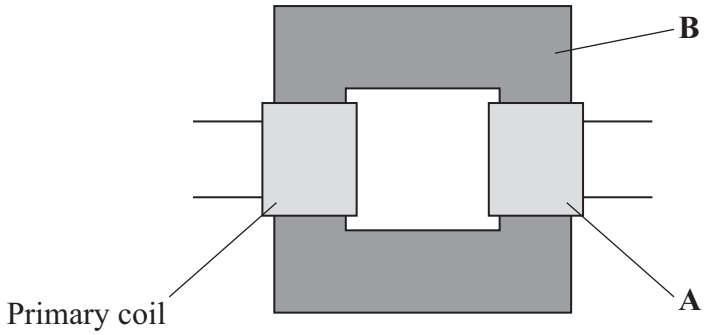

1 (a) (i) What is part **A**?

.....

(1 mark)

1 (a) (ii) What is part **B** and what is it made of?

.....

.....

(2 marks)

1 (a) (iii) When there is an alternating current in the primary coil, what is produced in part **B**?

.....

.....

(2 marks)

4.7.3.4 Transformers (HT only)

Question 13 · continued

for mark

1 (b) Transformers are used in the National Grid. The diagram shows part of the National Grid.

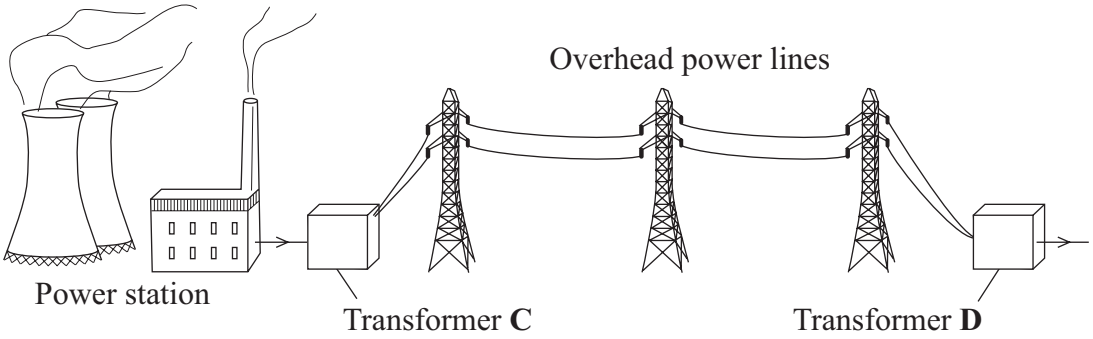

Complete the **two** spaces in the sentence.

Transformer **C** is a ..... transformer and transformer **D** is a ..... transformer. *(1 mark)*

1 (c) This is an item from a newspaper.

Health at risk from power lines?

Are high voltage power lines a health risk to people who live near them?

Some scientists think that scientific evidence shows that they are.

Other scientists do not think that the scientific evidence supports this conclusion.

Which **two** suggestions would reduce the possible risk to people's health? Put a tick (✓) in the box next to your answers.

Do not build new houses near to existing power lines. ☐

Move the power lines so that they take the shortest routes. ☐

Move each power station to the centre of the nearest city. ☐

Build new power lines away from where people live. ☐

Use more transformers in the National Grid. ☐

(2 marks)

8

4.7.3.4 Transformers (HT only)

Question 14

November 2009 | PHY1AP | Original Q5 | Legacy

QUESTION FIVE

Power stations produce electricity and the National Grid distributes it to our homes and to factories.

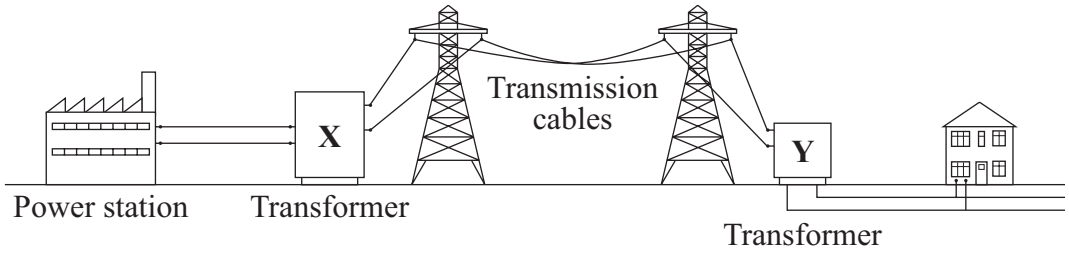

5A Electricity is transferred along the transmission cables at high voltage so that . . .

1 fewer pylons need to be used.

2 less energy is lost in the cables.

3 the current in the cables is also high.

4 thicker cables can be used.

5B The two transformers, **X** and **Y**, are needed to . . .

1 change heat to electrical energy at **X** and electrical energy to heat at **Y**.

2 change the current at **X** to a higher value and the current at **Y** to a lower value.

3 change the voltage at **X** from ac to dc and the voltage at **Y** from dc to ac.

4 change the voltage at **X** to a higher value and the voltage at **Y** to a lower value.

5C Power stations use gas, coal, oil or uranium as the fuel.

Which of these fuels does **not** produce carbon dioxide when it is used?

1 coal

2 gas

3 oil

4 uranium

4.7.3.4 Transformers (HT only)

Question 14 · continued

5D A hydroelectric power station does not release carbon dioxide into the atmosphere.

Which row in the table gives a correct advantage and a correct disadvantage of hydroelectric power stations?

	Advantage	Disadvantage
1	Valleys are flooded to form large lakes.	The building costs are very high.
2	There are no fuel costs.	They take a long time to start up.
3	They can be started up quickly.	Habitats are flooded to make large lakes.
4	No wildlife habitats are destroyed during construction.	Valleys are flooded to produce large lakes.

Turn over for the next question

4.7.3.4 Transformers (HT only)

Question 15

5 (a) The diagram shows the basic structure of a step-up transformer.

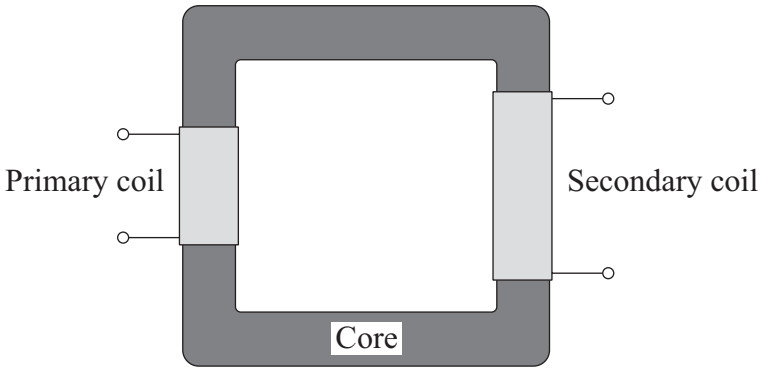

5 (a) (i) What is the core made of?

.....

(1 mark)

5 (a) (ii) Explain how an alternating input produces an alternating output.

.....

.....

.....

.....

.....

.....

(3 marks)

4.7.3.4 Transformers (HT only)

Question 15 · continued

for mark

5 (b) Fly killers are used in kitchens and food stores because flying insects carry diseases which cause food poisoning.

The diagram shows the inside of one design. Insects are attracted to a fluorescent lamp. The metal grids have a high potential difference (p.d.) between them. The insects are killed as they fly between the grids.

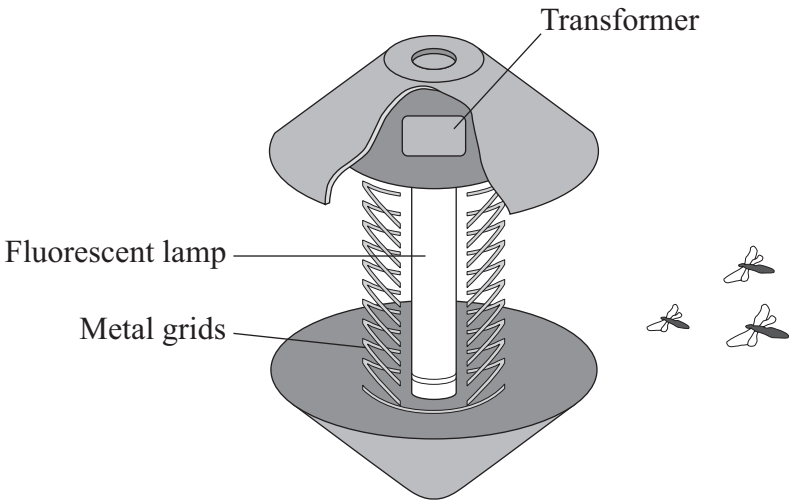

A transformer is used in the fly killer. There is a p.d. of 230 V across the primary coil. There are 300 turns of wire on the primary coil and 4000 turns on the secondary coil.

Use the equation in the box to calculate the p.d. across the secondary coil.

$$\frac{\text{p.d. across primary}}{\text{p.d. across secondary}} = \frac{\text{number of turns on primary}}{\text{number of turns on secondary}}$$

Show clearly how you work out your answer.

.....

.....

.....

.....

.....

Potential difference = ...V

(3 marks)

7

4.7.3.4 Transformers (HT only)

Question 16

March 2010 | PHY1AP | Original Q9 | Legacy

QUESTION NINE

In the south of Spain, there is an electricity generator which is powered by the Sun.

- Mirrors reflect the Sun's radiation onto a container of water at the top of a tower.
- The water is changed to steam.
- The steam is used to turn a generator.

9A The main source of energy for this generator is . . .

1 infra red.

2 light.

3 microwave.

4 ultraviolet.

9B Which row in the table gives a correct advantage and disadvantage for this generator?

	Advantage	Disadvantage
1	It cannot be used continuously over a 24-hour period.	It has low running costs.
2	It has low running costs.	It produces atmospheric pollution.
3	It produces no atmospheric pollution.	It uses non-renewable energy.
4	It uses renewable energy.	It cannot be used continuously over a 24-hour period.

9C The electricity is transferred to a nearby city using overhead cables.

At the power station, a transformer is used to . . .

1 increase the current, decrease the power and reduce energy losses.

2 increase the energy, increase the power and reduce energy losses.

3 increase the power, decrease the current and reduce energy losses.

4 increase the voltage, decrease the current and reduce energy losses.

4.7.3.4 Transformers (HT only)

Question 16 · continued

The maximum output of the generator is 11 000 000 watts.

9D A typical household needs 2 kW of electrical power.

If the solar generator is working at 60 % of its maximum output, the number of typical households that could be supplied is . . .

1 3 300

2 198 000

3 3 300 000

4 198 000 000

END OF TEST

4.7.3.4 Transformers (HT only)

Question 17

June 2010 | PHY1AP | Original Q9 | Legacy

QUESTION NINE

In a recent speech, a politician called for a European energy policy that gives sustainable, affordable and secure energy resources. The issues in the policy are given in the table.

	Policy issue
L	Break the dependency on fossil fuels, which are damaging the atmosphere
M	Guarantee realistic and stable costs to customers
N	Free citizens from dependence on unreliable energy suppliers

9A Which row in the table below describes correctly the issues in the energy policy?

	L	M	N
1	economic	environmental	political
2	environmental	economic	political
3	environmental	environmental	economic
4	economic	economic	environmental

9B The politician also stated that the electricity would be transferred by energy-efficient cables.

The cables would be *energy-efficient* so that . . .

1 energy would be created along the cables.

2 energy would be transformed along the cables.

3 energy loss in the cables would be kept to a minimum.

4 energy would be destroyed along the cables.

9C Part of the policy is to transfer electricity from renewable sources along a 'Super Grid'. This *Super Grid* could use transformers to achieve energy efficiency.

Just before the electricity entered the *Super Grid*, the transformer would . . .

1 decrease the voltage and decrease the current.

2 decrease the voltage and increase the current.

3 increase the voltage and decrease the current.

4 increase the voltage and increase the current.

4.7.3.4 Transformers (HT only)

Question 17 · continued

9D In the UK, electricity is transferred by the National Grid.

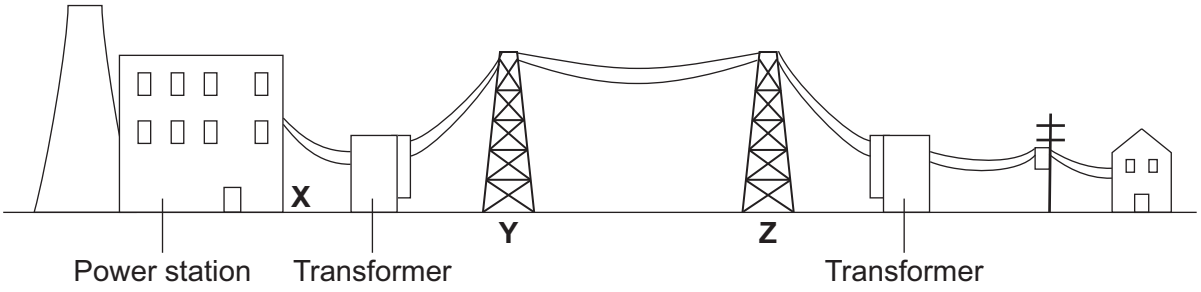

Which row in the table could give the correct voltages at **X**, **Y** and **Z**?

	X	Y	Z
1	25 kV	400 kV	25 kV
2	25 kV	400 kV	400 kV
3	400 kV	25 kV	25 kV
4	400 kV	400 kV	25 kV

END OF TEST

4.7.3.4 Transformers (HT only)

Question 18

June 2010 | PHY1H | Original Q5 | Legacy

5 The map shows the positions of two towns on either side of a very large coastal bay in England. The map also shows where a bridge may be built to link the towns. The road journey from one town to the other is about 60 kilometres at present.

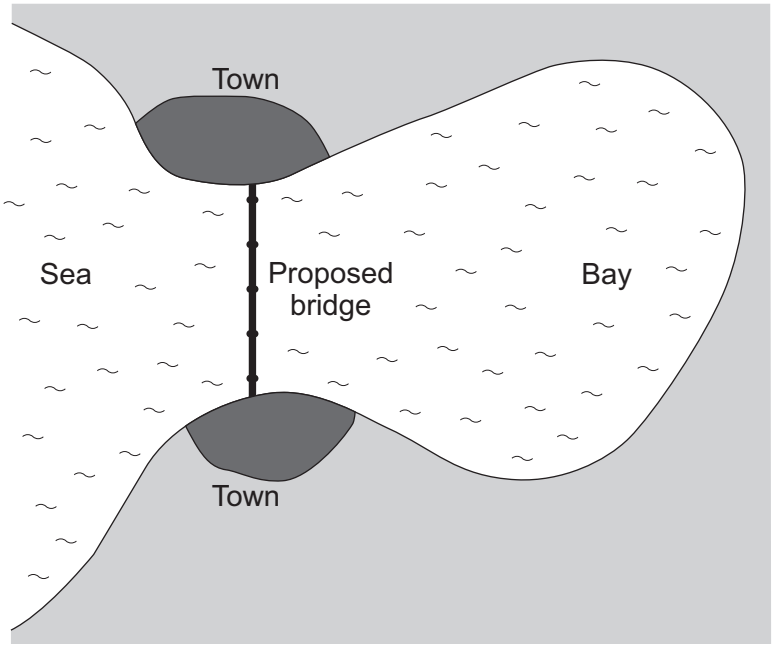

5 (a) It is estimated that building turbines and generators inside the legs of the bridge would produce enough electricity for both towns. In addition, enough electricity would be generated to run electric buses over the bridge between the two towns.

5 (a) (i) If the bridge is built, what form of renewable energy will be used to generate the electricity?

.....

(1 mark)

5 (a) (ii) Most people living in the area are in favour of the proposed bridge.

Suggest **three** reasons why people would be in favour of building the bridge and the associated electricity generating scheme.

Reason 1 .....

.....

Reason 2 .....

.....

Reason 3 .....

.....

(3 marks)

4.7.3.4 Transformers (HT only)

Question 18 · continued

5 (b) Even with the proposed bridge, the two towns will need to stay connected to the National Grid.

The diagram shows part of the National Grid.

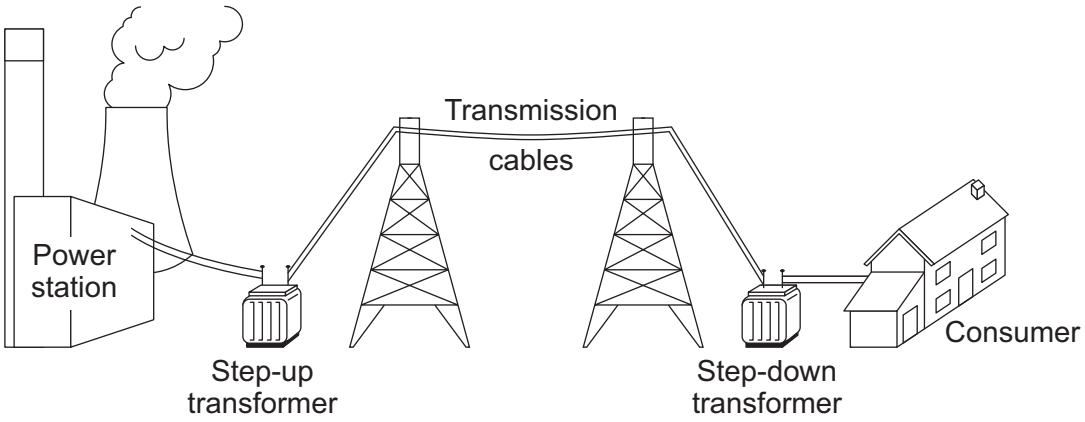

5 (b) (i) Give **one** reason why the towns need to stay connected to the National Grid.

.....

.....

(1 mark)

5 (b) (ii) Explain how the step-up transformer increases the efficiency of the National Grid.

.....

.....

.....

.....

(2 marks)

7

4.7.3.4 Transformers (HT only)

Question 19

June 2010 | PHY3H | Original Q3 | Legacy

3 The diagram shows a USB power adapter which plugs into a 230 V a.c. mains socket.

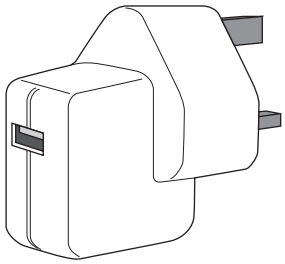

The adapter contains a small step-down transformer.

3 (a) The core of the transformer is made of laminated soft iron.

Why is iron used?

.....

.....

(1 mark)

3 (b) The coils of the transformers are made of insulated copper wire.

Why is the wire insulated?

.....

.....

(1 mark)

4.7.3.4 Transformers (HT only)

Question 19 · continued

3 (c) There are 500 turns on one coil of the transformer and 20 000 turns on the other coil.

Use the equation in the box to calculate the p.d. across the secondary coil.

$$\frac{\text{p.d. across primary}}{\text{p.d. across secondary}} = \frac{\text{number of turns on primary}}{\text{number of turns on secondary}}$$

Show clearly how you work out your answer and give the unit.

.....

.....

.....

p.d. across the secondary = ...

(3 marks)

5

Turn over for the next question

4.7.3.4 Transformers (HT only)

Question 20

November 2010 | PHY1AP | Original Q7 | Legacy

QUESTION SEVEN

The diagram shows a power station connected to the National Grid. The National Grid distributes the electrical energy to homes.

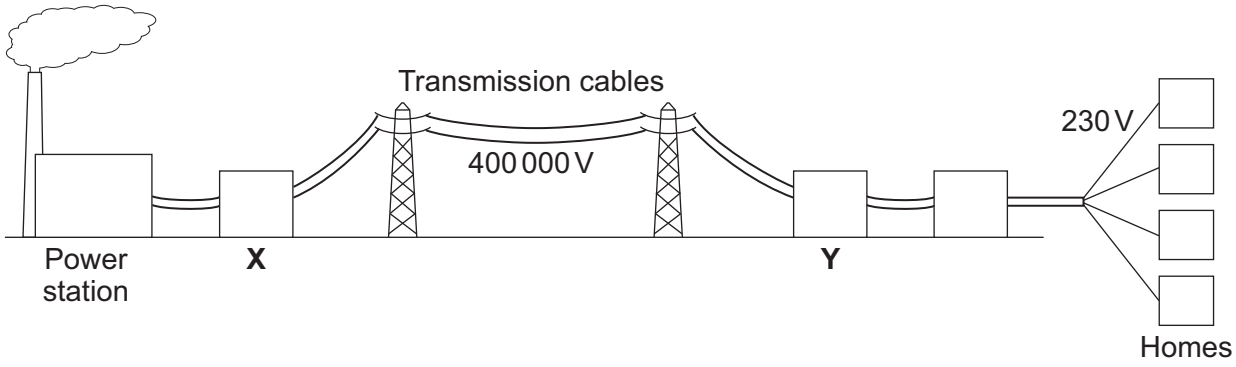

7A Which row in the table correctly describes the transformers **X** and **Y**?

	X	Y
1	step-down	step-down
2	step-down	step-up
3	step-up	step-down
4	step-up	step-up

7B Why is the voltage (potential difference) across the transmission cables of the National Grid very high?

1 so that the electricity travels faster

2 so that the electric current is large

3 to make the transmission of electricity safe

4 to reduce energy loss from the cables

7C A transformer changes both the voltage and the current.

Which row in the table correctly describes the changes of current in transformers **X** and **Y**?

	X	Y
1	decrease	decrease
2	decrease	increase
3	increase	decrease
4	increase	increase

4.7.3.4 Transformers (HT only)

Question 20 · continued

7D In the power station, the boiler has an efficiency of 0.75. The turbine and generator system have an efficiency of 0.80.

$$\text{efficiency} = \frac{\text{useful energy transferred by the device}}{\text{total energy supplied to the device}}$$

For every 1000 J of energy supplied to the boiler, what is the useful output energy from the turbine and generator system?

1 600 J

2 750 J

3 800 J

4 1670 J

Turn over for the next question

4.7.3.4 Transformers (HT only)

Question 21

January 2011 | PHY1H | Original Q4 | Legacy

4 The diagram shows a small-scale, *micro-hydroelectricity* generator which uses the energy of falling river water to generate electricity. The water causes a device, called an Archimedean screw, to rotate.
The Archimedean screw is linked to the generator by a gearbox.

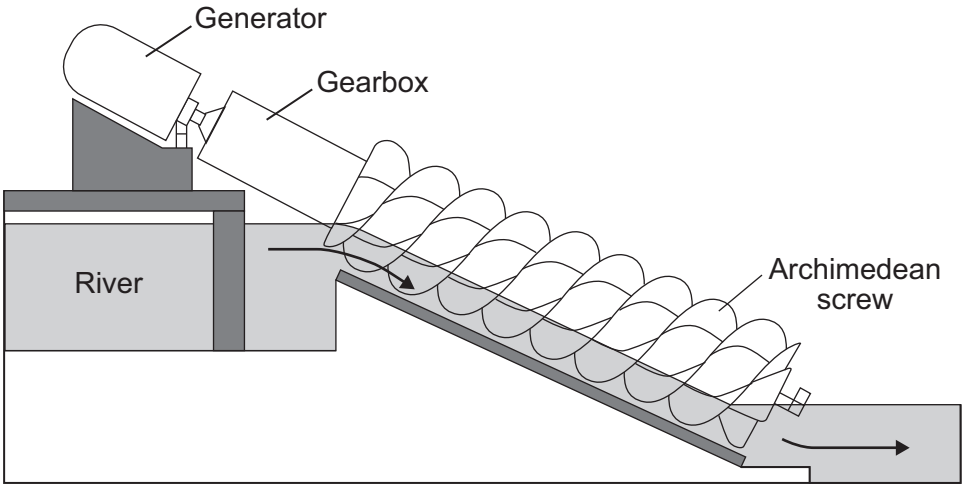

4 (a) Each second, the *micro-hydroelectricity* generator transforms 80 000 joules of gravitational potential energy into 60 000 joules of electrical energy.

4 (a) (i) Fill in the missing word to complete the energy transformation diagram.

Gravitational potential energy of the falling water	→ ..... energy of the Archimedean screw	→ Electrical energy generated

(1 mark)

4 (a) (ii) Use the equation in the box to calculate the efficiency of the *micro-hydroelectricity* generator.

$$\text{efficiency} = \frac{\text{useful energy transferred by the device}}{\text{total energy supplied to the device}}$$

Show clearly how you work out your answer.

.....

.....

Efficiency = ...

(2 marks)

4.7.3.4 Transformers (HT only)

Question 21 · continued

4 (b) The power output from a conventional large-scale hydroelectric power station is 100 000 times more than the power output from a micro-hydroelectric system.

Give **one** disadvantage of a conventional large-scale hydroelectric power station compared to the micro-hydroelectric system.

.....

.....

(1 mark)

4 (c) The electricity generated by a micro-hydroelectric system is transferred via a transformer directly to local homes. The electricity generated by a conventional large-scale hydroelectric power station is transferred to the National Grid, which distributes the electricity to homes anywhere in the country.

4 (c) (i) What is the National Grid?

.....

.....

(1 mark)

4 (c) (ii) Explain why transferring the electricity directly to local homes is more efficient than using the National Grid to distribute the electricity.

.....

.....

.....

.....

(2 marks)

7

4.7.3.4 Transformers (HT only)

Question 22

January 2011 | PHY3H | Original Q4 | Legacy

4 (a) The drawing shows the plug for operating a radio from the mains.

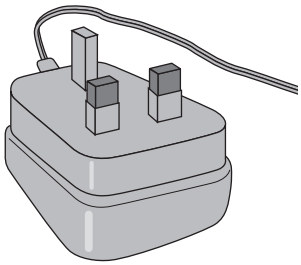

This plug contains a transformer. There are 4600 turns on its primary coil and 200 turns on its secondary coil. The plug is used on the mains supply and has a potential difference (p.d.) of 230 V across its primary coil.

Use the equation in the box to calculate the p.d. across the secondary coil of the transformer.

$$\frac{\text{p.d. across primary}}{\text{p.d. across secondary}} = \frac{\text{number of turns on primary}}{\text{number of turns on secondary}}$$

Show clearly how you work out your answer.

.....

.....

.....

.....

p.d. across secondary = ... V

(2 marks)

4 (b) The coils of the transformer are made of insulated wire.

Why is the wire insulated?

.....

.....

(1 mark)

4.7.3.4 Transformers (HT only)

Question 22 · continued

4 (c) (i) What material is the core of a transformer made from?

.....

(1 mark)

4 (c) (ii) Why is the core made from this material?

.....

.....

(1 mark)

5

Turn over for the next question

4.7.3.4 Transformers (HT only)

Question 23

March 2011 | PHY1AP | Original Q8 | Legacy

QUESTION EIGHT

The diagram shows a power station supplying electricity to the National Grid. There are four transformers in the system, labelled **P**, **Q**, **R** and **S**.

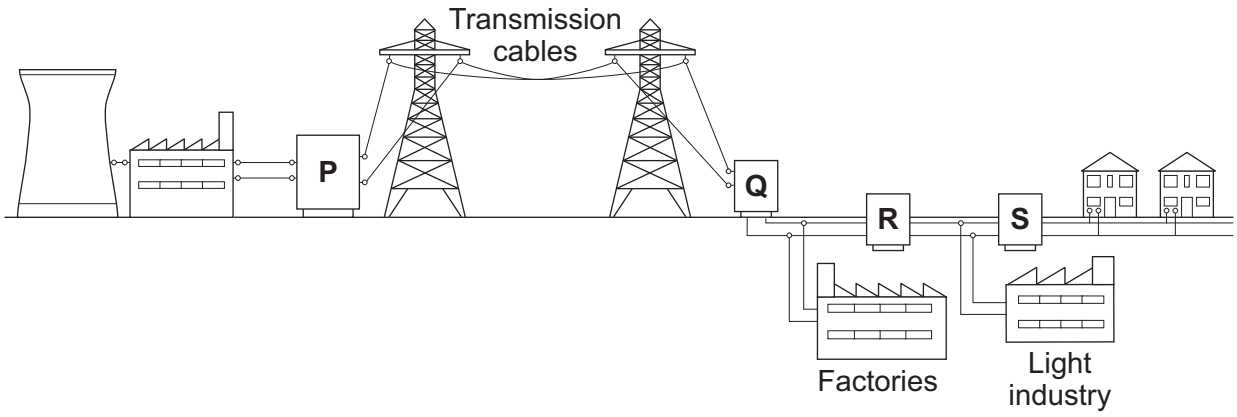

8A Which row in the table correctly describes each transformer?

	P	Q	R	S
1	step up	step down	step down	step down
2	step down	step up	step up	step up
3	step up	step down	step up	step down
4	step up	step up	step down	step down

8B The voltage across the overhead transmission cables is very high.

The best explanation for this is that . . .

1 it allows thinner cables to be used and the energy loss from the cables is reduced.

2 the energy loss from the cables is reduced and it allows the distance between pylons to be reduced.

3 the distance between the pylons can be reduced and thicker cables can be used.

4 it allows the current to travel more slowly and thicker cables can be used.

Question 23 · continued

8C Changing the voltage between the power station and the transmission cables using transformer **P** also changes the current flowing and the efficiency of distribution.

Which row of the table correctly shows these changes?

	Voltage	Current	Efficiency
1	increases	increases	increases
2	decreases	decreases	increases
3	decreases	decreases	decreases
4	increases	decreases	increases

8D Transmission cables can either be suspended from pylons above ground or they can be buried underground.

An electromagnetic field is produced when an electric current flows through a cable. Some people think that these fields can cause a health risk.

The graph shows how the strength of the electromagnetic field varies with distance from the cable for both overhead cables and underground cables.

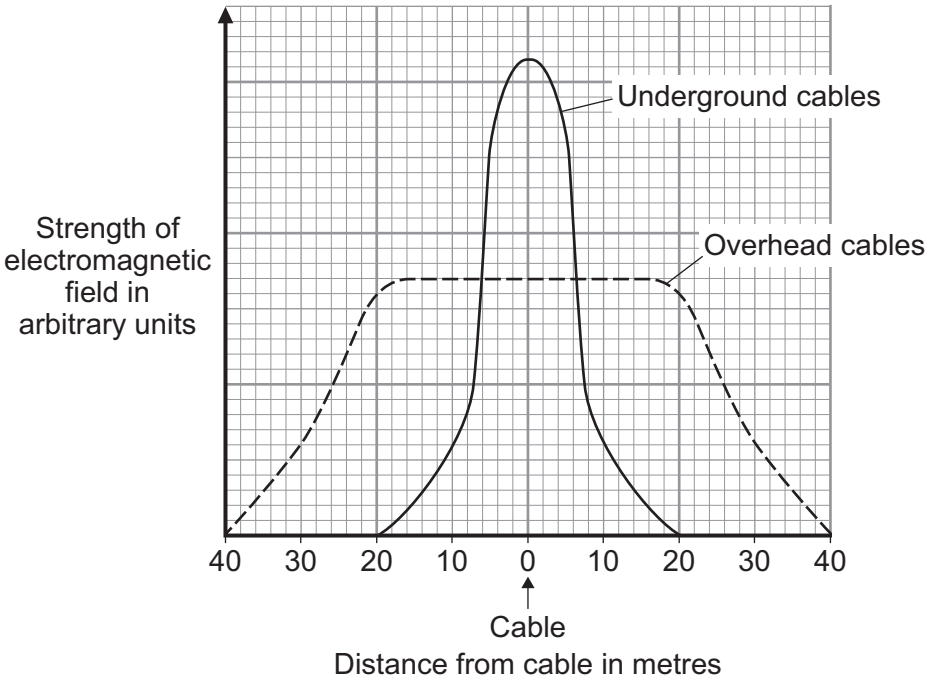

Which of the following conclusions could be made from the graph?

1 When you are within 5 metres of the cable, the possible risk to health is bigger with an underground cable.

2 The possible health risk from overhead cables falls to zero when you are 20 metres away.

3 The biggest possible health risk from overhead cables occurs when you are 40 metres away.

4 Between 10 and 40 metres away, the biggest possible health risk is from underground cables.

4.7.3.4 Transformers (HT only)

Question 24

June 2011 | PHY1AP | Original Q7 | Legacy

QUESTION SEVEN

Transformers are used in the National Grid.

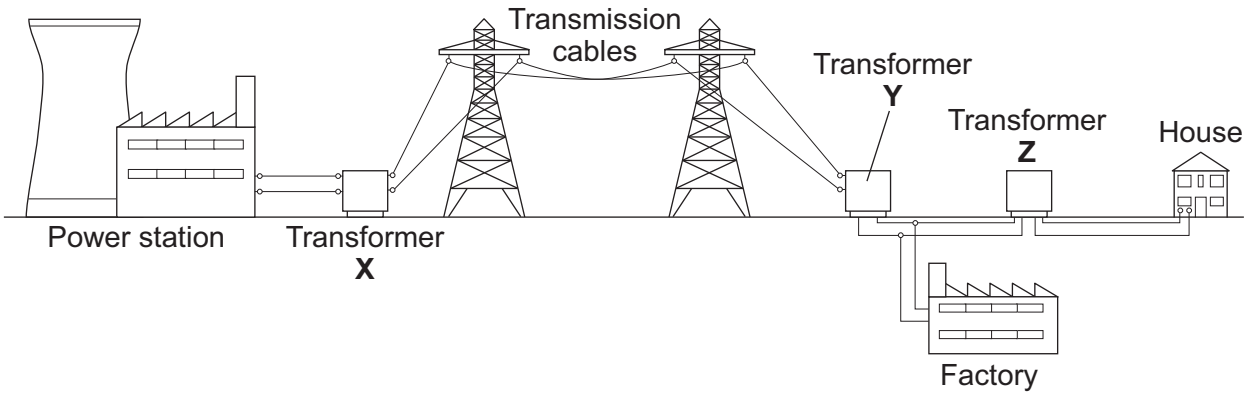

7A Both step-up transformers and step-down transformers are used in the National Grid.

Which row in the table shows the correct types of transformer?

	Transformer X	Transformer Y	Transformer Z
1	step-up	step-down	step-up
2	step-up	step-up	step-up
3	step-up	step-down	step-down
4	step-up	step-up	step-down

7B Transformer **X** changes the voltage between the power station and the transmission cables. It also changes the current. These changes affect the efficiency of the transmission cables.

Which row in the table correctly describes the changes produced by transformer **X**?

	Voltage	Current	Efficiency of transmission
1	decreased	decreased	decreased
2	decreased	increased	increased
3	increased	decreased	increased
4	increased	increased	increased

4.7.3.4 Transformers (HT only)

Question 24 · continued

7C The table shows the percentage of energy wasted as heat and sound by four different transformers.

Which transformer has the highest efficiency?

Transformer	Percentage of energy supplied to transformer which is wasted as sound	Percentage of energy supplied to transformer which is wasted as heat
1	1.1	7.4
2	1.2	4.7
3	1.3	5.4
4	1.4	6.9

7D The amount of electricity that a device uses depends on the rate at which the device transforms energy and . . .

1 how long the device is switched on.

2 the current through the device.

3 the potential difference across the device.

4 the power of the device.

4.7.3.4 Transformers (HT only)

Question 25

June 2011 | PHY3H | Original Q7 | Legacy

7 (a) In the National Grid, very large step-up transformers link power stations to the transmission cables.

A transformer used for this purpose has 800 turns on its primary coil and 12 800 turns on its secondary coil. The p.d. (potential difference) across its primary coil is 25 kV.

Use the equation in the box to calculate the p.d. across its secondary coil.

$$\frac{\text{p.d. across primary}}{\text{p.d. across secondary}} = \frac{\text{number of turns on primary}}{\text{number of turns on secondary}}$$

Show clearly how you work out your answer **and** give the unit.

.....

.....

p.d. across secondary coil = ...

(3 marks)

7 (b) The primary and secondary coils of a transformer are made of insulated wire.

Why is this insulation necessary?

.....

.....

(1 mark)

7 (c) Describe what happens when an alternating potential difference is applied across the primary coil of a transformer.

.....

.....

.....

.....

.....

.....

(3 marks)

7

4.7.3.4 Transformers (HT only)

Question 26

November 2011 | PHY1AP | Original Q6 | Legacy

QUESTION SIX

Electricity is transmitted around the country through the National Grid.

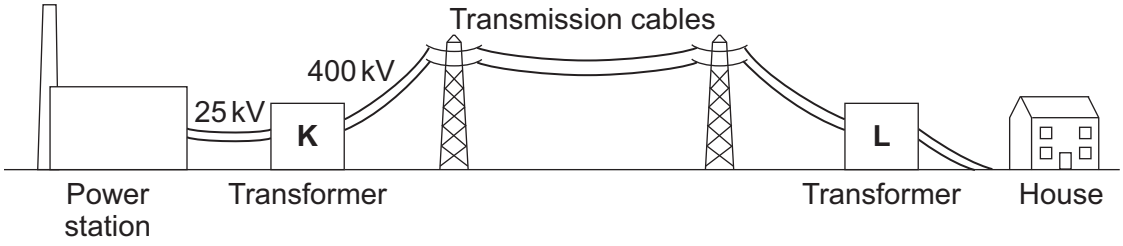

6A The voltage from the power station is stepped up from 25 kV to 400 kV in transformer **K** so that . . .

1 the current decreases.

2 the current increases.

3 the current travels faster.

4 the current travels more slowly.

6B Increasing the voltage also . . .

1 increases energy losses from the cables.

2 makes the National Grid more efficient.

3 makes the National Grid safer.

4 means a step-down transformer is not needed.

6C Which row of the table shows what happens in transformer **L**?

	Current	Voltage
1	decreases	decreases
2	decreases	increases
3	increases	decreases
4	increases	increases

4.7.3.4 Transformers (HT only)

Question 26 · continued

6D The amount of electrical energy that a device transfers depends on . . .

1 the current flowing through the device only.

2 for how long the device is switched on only.

3 the power of the device only.

4 the power of the device and for how long it is switched on.

Turn over for the next question

4.7.3.4 Transformers (HT only)

Question 27

June 2013 | PH3HP | Original Q7 | Legacy

7 Batteries inside laptop computers are charged using laptop chargers. The laptop charger contains a traditional transformer.

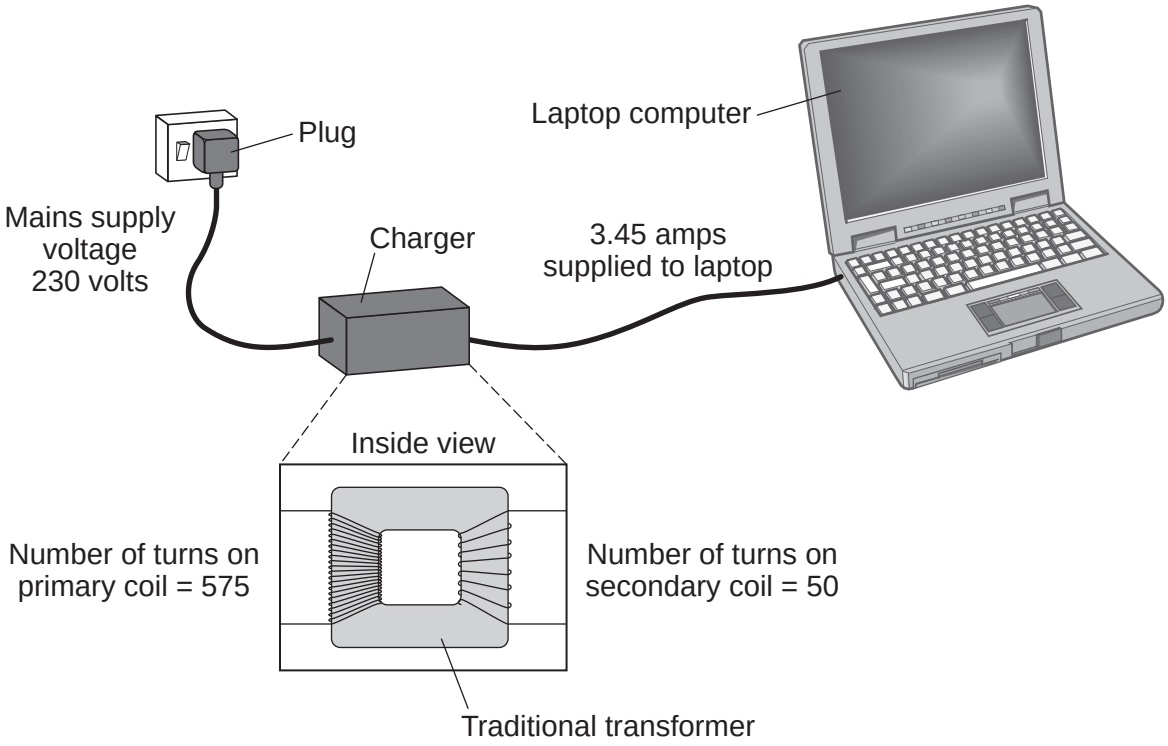

7 (a) The alternating current flowing through the primary coil of the transformer creates an alternating current in the secondary coil.

Explain how.

.....

.....

.....

.....

.....

.....

.....

.....

(3 marks)

4.7.3.4 Transformers (HT only)

Question 27 · continued

7 (b) (i) Use information from the diagram to calculate the potential difference the charger supplies to the laptop.

Use the correct equation from the Physics Equations Sheet.

.....

.....

.....

.....

Potential difference = ... V

(2 marks)

7 (b) (ii) Calculate the current in the primary coil of the transformer when the laptop is being charged.

Assume the transformer is 100% efficient.

Use the correct equation from the Physics Equations Sheet.

.....

.....

.....

.....

Current = ... A

(2 marks)

Question 7 continues on the next page

4.7.3.4 Transformers (HT only)

Question 27 · continued

7 (c) Switch mode transformers can be used in mobile phone chargers.

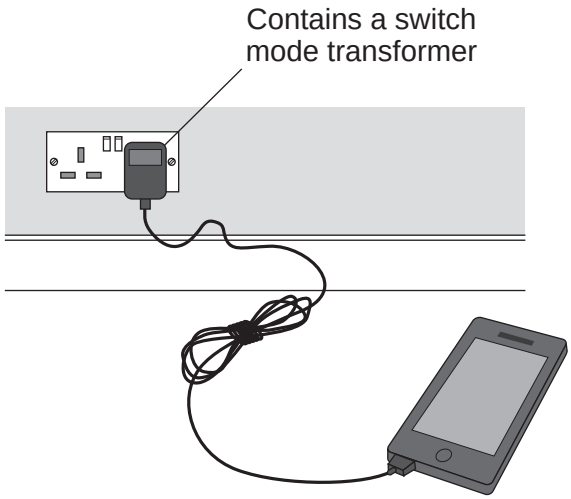

Switch mode transformers and traditional transformers can both use the UK mains supply.

The switch mode transformer is smaller and lighter than the traditional transformer used in the laptop charger.

Give **one** other advantage of the switch mode transformer.

.....

.....

(1 mark)

7 (d) Laptop batteries and mobile phone batteries can only be recharged a limited number of times. After this, the batteries cannot store enough charge to be useful. Scientists are developing new batteries that can be recharged many more times than existing batteries.

Suggest **one** other advantage of developing these new batteries.

.....

.....

.....

(1 mark)

9

4.7.3.4 Transformers (HT only)

Question 28

June 2014 | PH3HP | Original Q3 | Legacy

3 (a) **In this question you will be assessed on using good English, organising information clearly and using specialist terms where appropriate.**

There are two types of traditional transformer; step-up and step-down.

Describe the similarities and differences between a step-up transformer and a step-down transformer.

You should include details of:

- construction, including materials used
- the effect the transformer has on the input potential difference (p.d.).

You should **not** draw a diagram.

[6 marks]

.....

.....

.....

.....

.....

.....

.....

.....

.....

.....

.....

.....

Extra space .....

.....

.....

.....

.....

.....

Question 3 continues on the next page

4.7.3.4 Transformers (HT only)

Question 28 · continued

3 (b) **Figure 4** shows a mobile phone and charger.

Figure 4

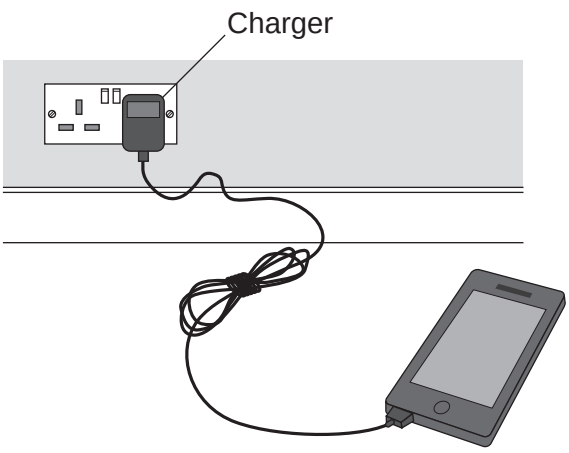

Mobile phone chargers use a different type of transformer, which is smaller and lighter than a traditional transformer.

What name is given to the type of transformer used in a mobile phone charger?

[1 mark]

.....

7

4.7.3.4 Transformers (HT only)

Question 29

8 An electric toothbrush is charged by standing it on a separate charging base. **Figure 15** shows the inside of the electric toothbrush and the charging base.

Figure 15

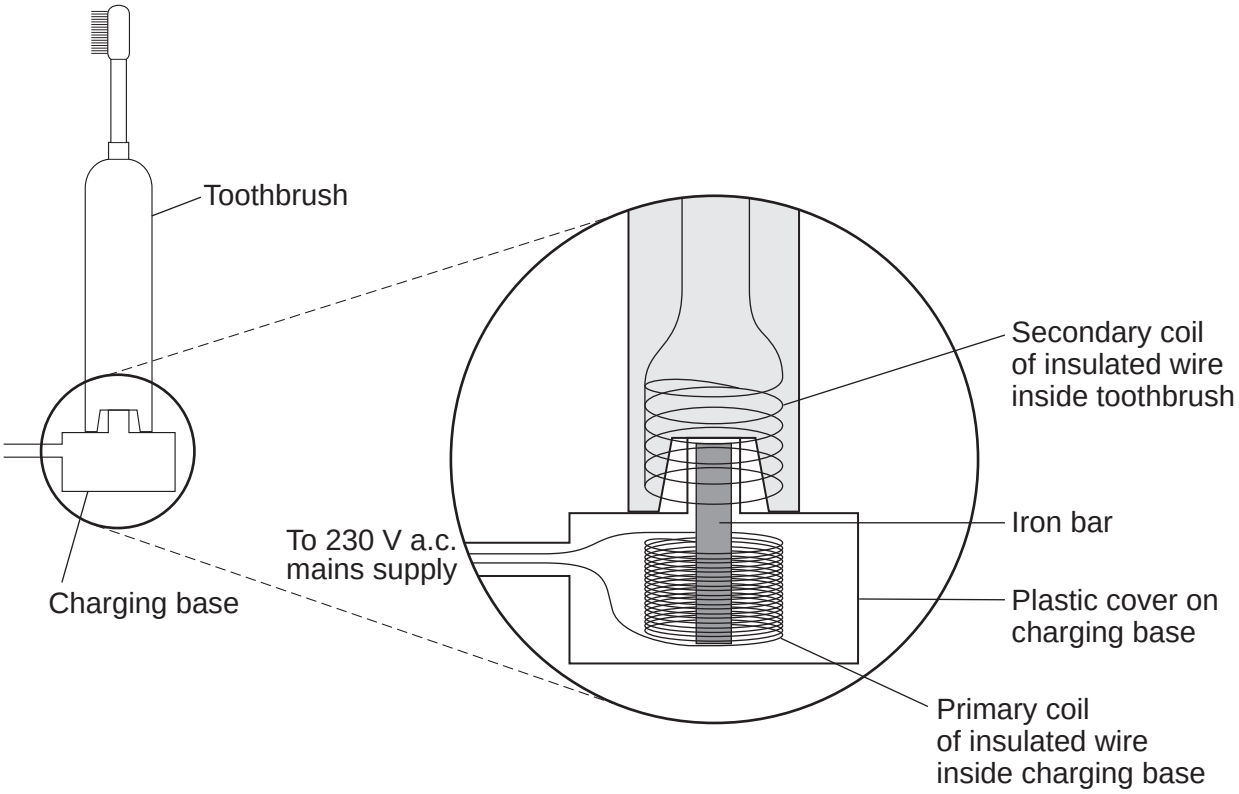

8 (a) An alternating potential difference (p.d.) across the coil in the charging base creates an alternating current in the coil inside the toothbrush.

Explain how.

[3 marks]

.....

.....

.....

.....

.....

.....

.....

.....

4.7.3.4 Transformers (HT only)

Question 29 · continued

8 (b) When the toothbrush is being charged, the p.d. across the primary coil in the charging base is 230 V.

The charging p.d. across the secondary coil in the toothbrush is 7.2 V.

The primary coil in the charging base has 575 turns of wire on its coil.

Calculate the number of turns on the secondary coil inside the toothbrush.

Use the correct equation from the Physics Equations Sheet.

[2 marks]

.....

.....

.....

.....

Number of turns on the secondary coil = ...

5

4.7.3.4 Transformers (HT only)

Question 30

June 2016 | PH3HP | Original Q2 | Legacy

2 **Figure 2** shows the structure of a traditional transformer.

Figure 2

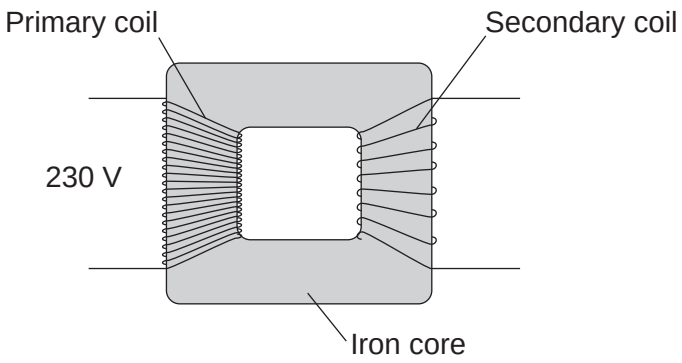

2 (a) There is an alternating current in the primary coil of the transformer.

State what is produced in the iron core.

[2 marks]

_____

_____

2 (b) A transformer has only **one** turn of wire on the secondary coil.
The potential difference across the secondary coil is 11.5 V
The potential difference across the primary coil is 230 V

Calculate the number of turns on the primary coil.

Use the correct equation from the Physics Equations Sheet.

[2 marks]

_____

_____

_____

_____

Number of turns on the primary coil = _____

Question 2 continues on the next page

4.7.3.4 Transformers (HT only)

Question 30 · continued

2 (c) In most transformers, the power output is less than the power input.

State why.

[1 mark]

2 (d) Two students investigated how magnets can be used to produce a potential difference. The students held a coil of wire above a magnet. The students quickly lowered the coil so that the magnet was inside the coil, as shown in **Figure 3**.

Figure 3

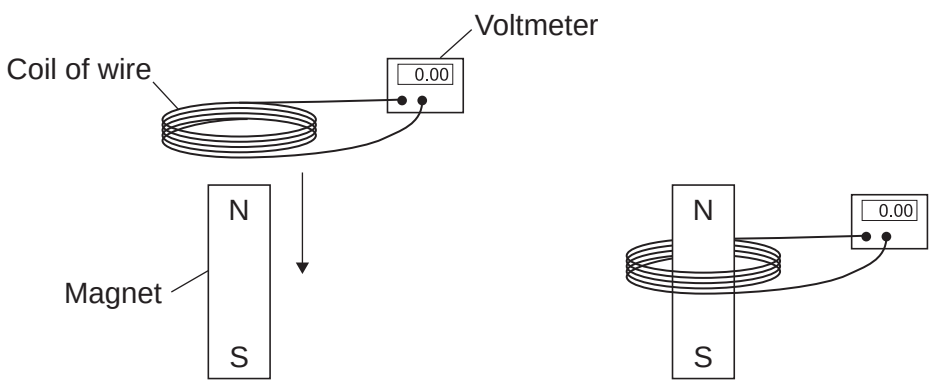

The students recorded the maximum potential difference for coils with different numbers of turns of wire. The results are shown in **Table 1**.

Table 1

Number of turns of wire in the coil	Maximum potential difference in volts	
	Results from student 1	Results from student 2
5	0.09	0.08
10	0.20	0.15
15	0.31	0.25
20	0.39	0.33
25	0.51	0.39

4.7.3.4 Transformers (HT only)

Question 30 · continued

2 (d) (i) State the resolution of the voltmeter.

Give **one** reason why the resolution of the voltmeter is suitable for this investigation.

[2 marks]

Resolution _____

Reason _____

_____

2 (d) (ii) The two students used exactly the same equipment to carry out their investigations. Both students recorded their results correctly.

Give the reason why student 2 got different results from student 1.

[1 mark]

_____

_____

2 (d) (iii) The students decided that even though the results were different, there was no need to repeat the investigation.

How do the results show that the investigation is reproducible?

[1 mark]

_____

_____

2 (d) (iv) State the name of the process which causes the potential difference to be produced in this investigation.

[1 mark]

_____

2 (e) A transformer has been developed that can be used with many different devices.

Suggest **one** advantage of having a transformer that can be used with many different devices.

[1 mark]

_____

_____

11

4.7.3.4 Transformers (HT only)

Question 31

June 2017 | PH1HP | Original Q7 | Legacy

7 **Figure 7** shows how the National Grid connects power stations to consumers.

Figure 7

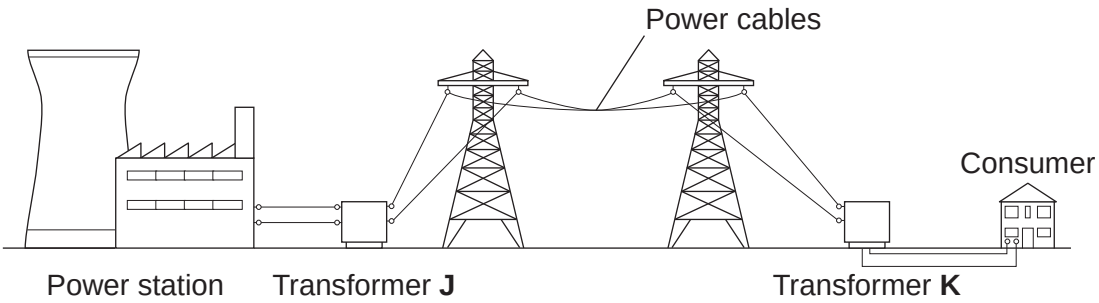

7 (a) Explain the role of the two transformers, **J** and **K**, in the power transmission process and the reasons for their use.

[4 marks]

4.7.3.4 Transformers (HT only)

Question 31 · continued

7 (b) In a pumped storage power station, water flows from a high level reservoir to a low level reservoir turning turbines and generating electricity.

Pumped storage power stations do not supply electricity to the National Grid at all times of the day.

Figure 8 shows a pumped storage power station.

Figure 8

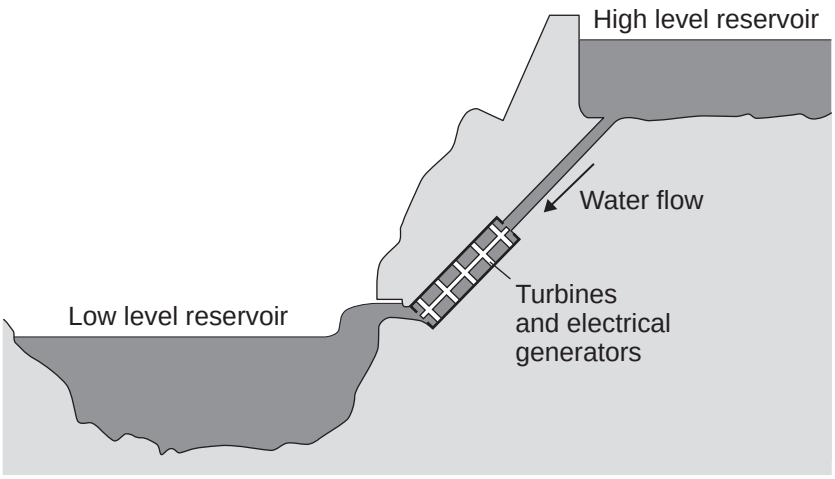

7 (b) (i) Explain how pumped storage power stations store energy for later use.

[4 marks]

7 (b) (ii) Explain why pumped storage power stations are able to meet sudden large demands for electricity.

[2 marks]

10

4.7.3.4 Transformers (HT only)

Question 32

June 2018 | 8463/2H | Original Q7

0 7 A student used a simple transformer to investigate how the number of turns on the secondary coil affects the potential difference (p.d.) across the secondary coil.

The student kept the p.d. across the primary coil fixed at 2V.

Figure 12 shows the results collected by the student.

Figure 12

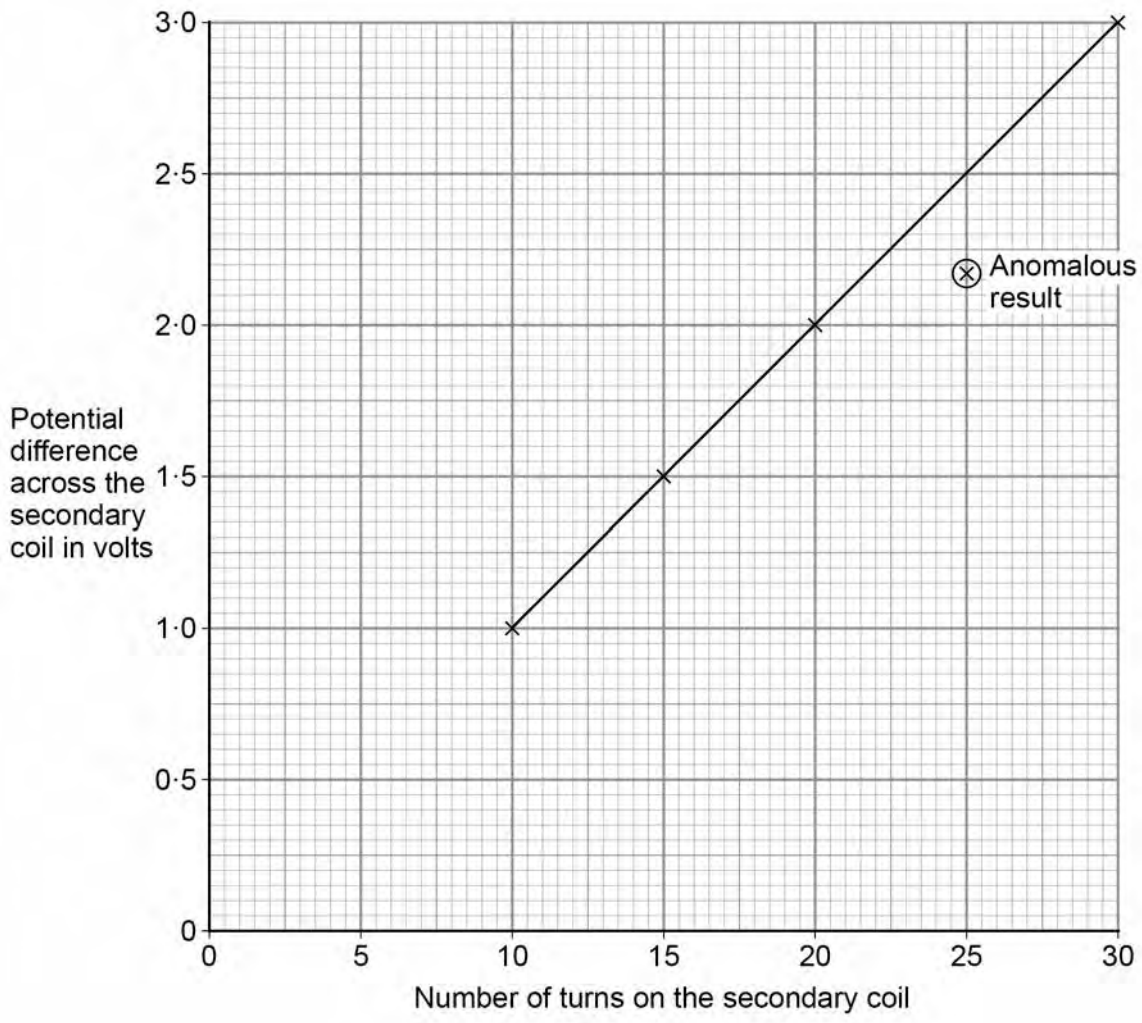

0 7 . 1 **Figure 12** contains one anomalous result.

Suggest **one** possible reason why this anomalous result occurred.

[1 mark]

4.7.3.4 Transformers (HT only)

Question 32 · continued

0 7 . 2 The transformer changes from being a step-down to a step-up transformer.

How can you tell from **Figure 12** that this happens?

[1 mark]

Question 7 continues on the next page

4.7.3.4 Transformers (HT only)

Question 32 · continued

A spot-welder is a device that uses a transformer to produce a large current to join sheets of metal together.

Figure 13 shows a transformer demonstrating how a large current can heat and join two nails together.

Figure 13

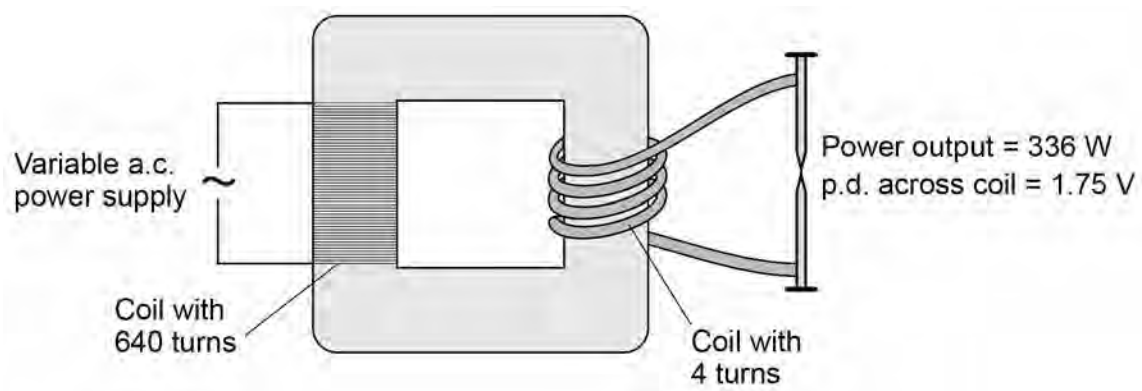

0 7 . 3 How does the amount of infrared radiation emitted by the nails change when the power supply is switched on?

[1 mark]

0 7 . 4 Calculate the current from the power supply needed to provide a power output of 336 W.

Use the data in **Figure 13**.

The transformer is 100% efficient.

[5 marks]

Current = _____ A

8

4.7.3.4 Transformers (HT only)

Question 33

November 2020 | 8463/2H | Original Q7

0 7 **Figure 10** shows a portable power supply.

Figure 10

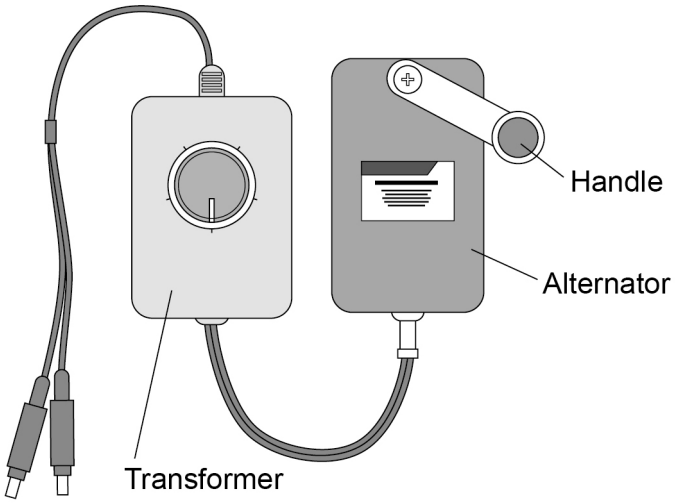

0 7 . 1 The portable power supply has an alternator connected to a transformer.

The transformer can be adjusted to have different numbers of turns on the secondary coil.

Suggest why.

[2 marks]

4.7.3.4 Transformers (HT only)

Question 33 · continued

0 7 . 2 A lamp is connected to the power supply.

The lamp requires an input potential difference of 5.0 V.

The alternator generates a potential difference of 1.5 V.

The primary coil of the transformer has 150 turns.

Calculate the number of turns needed on the secondary coil.

[3 marks]

Number of turns on the secondary coil = _____

Question 7 continues on the next page

4.7.3.4 Transformers (HT only)

Question 33 · continued

Figure 11 shows the inside parts of the alternator.

Figure 11

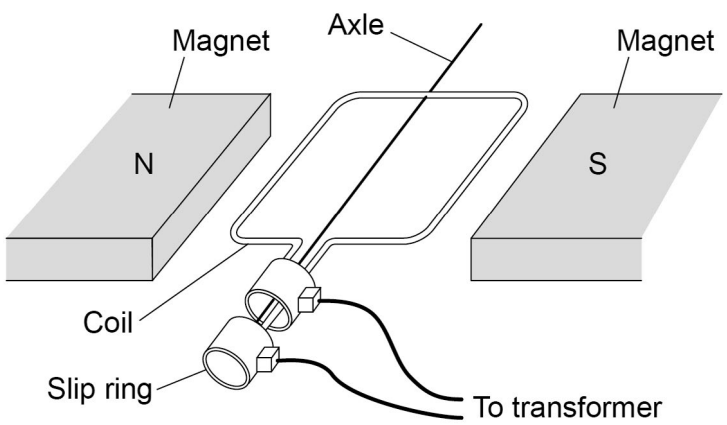

0 7 . 3 The handle of the alternator is turned, causing the coil to rotate.

Explain why an alternating current is induced in the coil.

[5 marks]

4.7.3.4 Transformers (HT only)

Question 33 · continued

0 7 . 4 Suggest the purpose of the slip rings.

[1 mark]

0 7 . 5 The alternator from the portable power supply is disconnected from the transformer and lamp.

Explain why the handle of the alternator becomes much easier to turn.

[3 marks]

14

4.7.3.4 Transformers (HT only)

Question 34

June 2022 | 8463/1H | Original Q6

0 6 **Figure 8** shows how electricity is supplied to consumers by the National Grid.

Figure 8

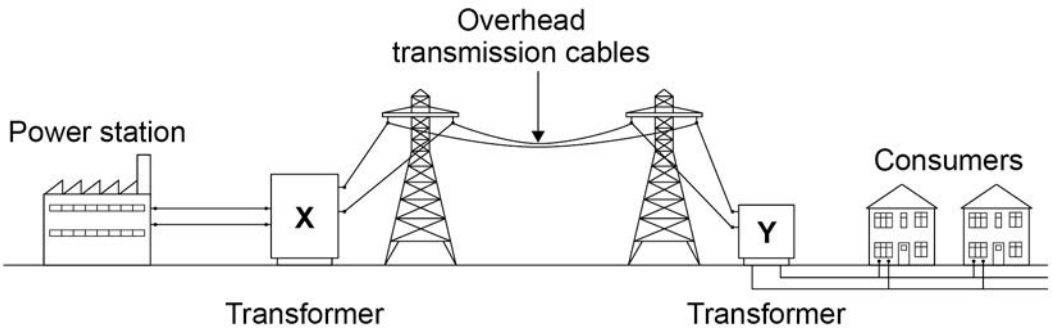

0 6 . 1 Explain why transformer **X** is used in the National Grid.

[4 marks]

0 6 . 2 Explain why transformer **Y** is used in the National Grid.

[2 marks]

4.7.3.4 Transformers (HT only)

Question 34 · continued

0 6 . 3 The town of Hornsdale in Australia has electricity supplied by a huge battery.

On one day the battery transferred 3.24×10^{11} J of energy to the town.

The potential difference of the town's electricity supply is 230 V.

Calculate the charge flow to the town on this day.

Use the Physics Equations Sheet.

Give your answer to **3** significant figures.

[4 marks]

Charge flow (3 significant figures) = _____ C

10

4.7.3.4 Transformers (HT only)

Question 35

June 2022 | 8463/2HR | Original Q7

0 7 The National Grid uses transformers to change potential difference (pd).

Figure 12 shows a transformer.

Figure 12

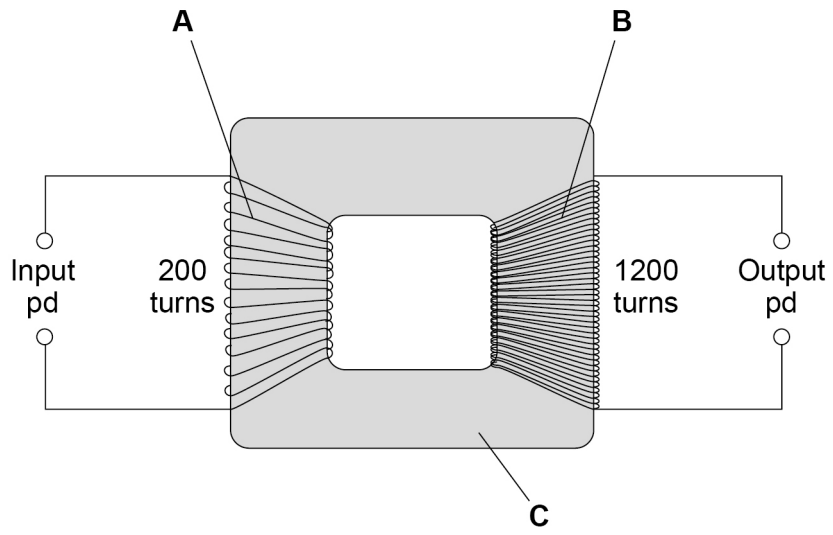

0 7 . 1 Identify the parts of the transformer labelled in **Figure 12**.

[2 marks]

A _____

B _____

C _____

0 7 . 2 There is an alternating input pd of 230 V.

Determine the output pd.

Use the Physics Equations Sheet.

[3 marks]

_____

_____

_____

_____

_____

Output pd = _____ V

4.7.3.4 Transformers (HT only)

Question 35 · continued

0 7 . 3 The input pd causes an alternating current.

Explain why there is an alternating current in the output when the transformer is connected to a circuit.

[3 marks]

Question 7 continues on the next page

Figure 13 shows a large cable supported by two wooden poles. The cable is connected to an electricity supply.

Figure 13

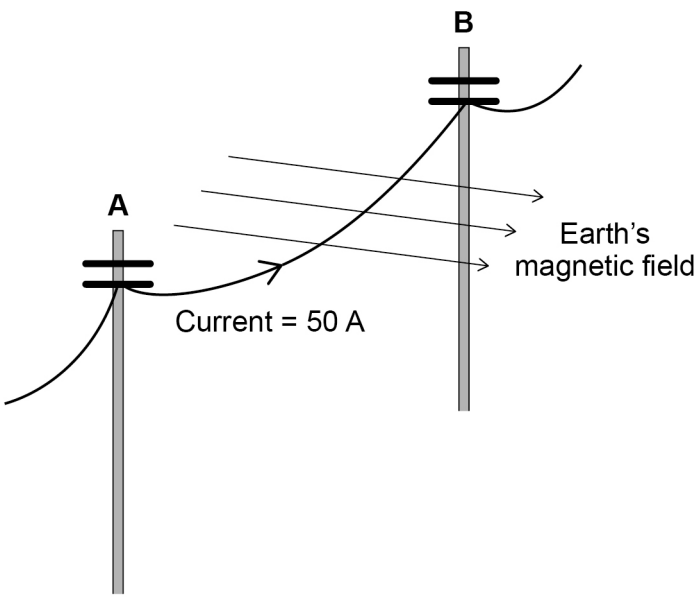

0 7 . 4 There is a force on the cable due to the Earth's magnetic field when the current is in the direction **A** to **B**.

What is the direction of this force?

[1 mark]

Tick (✓) **one** box.

Down ☐

Left ☐

Right ☐

Up ☐

4.7.3.4 Transformers (HT only)

Question 35 · continued

0 7 . 5 The cable experiences a force of 0.045 N due to the Earth's magnetic field.

magnetic flux density = 60 μT

current = 50 A

Calculate the length of the cable between **A** and **B**.

Use the Physics Equations Sheet.

[4 marks]

Length = _____ m

0 7 . 6 State **one** assumption you made in your calculation.

[1 mark]

_____

14

4.7.3.4 Transformers (HT only)

Question 36

June 2023 | 8463/1H | Original Q1

0 1 **Figure 1** shows how the National Grid connects a power station to consumers.

Figure 1

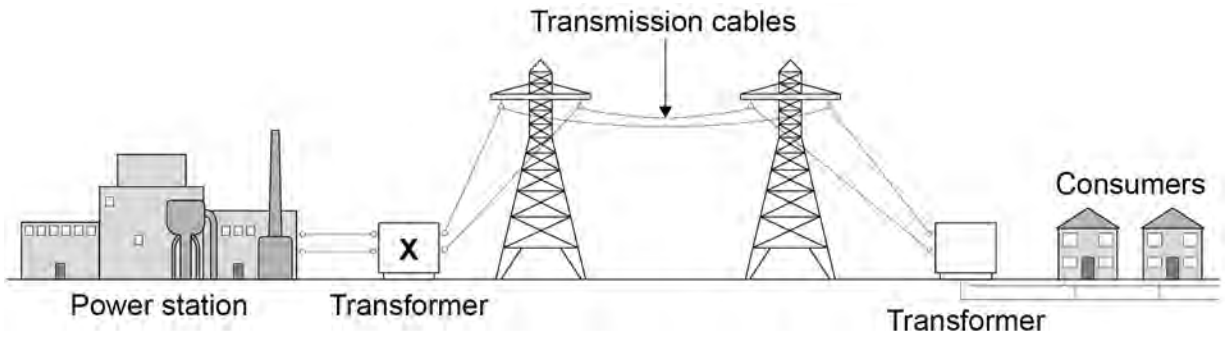

0 1 . 1 Complete the sentences.

[2 marks]

Transformer **X** causes the potential difference to _____ .

Transformer **X** causes the current to _____ .

Use the Physics Equations Sheet to answer questions **01.2** and **01.3**.

0 1 . 2 Which equation links current (I), power (P) and resistance (R)?

[1 mark]

Tick (✓) **one** box.

$P = \frac{I}{R}$ ☐

$P = \frac{I}{R^2}$ ☐

$P = I^2 R$ ☐

$P = IR$ ☐

4.7.3.4 Transformers (HT only)

Question 36 · continued

0 1 . 3 A transmission cable has a power loss of 1.60×10^9 W.

The current in the cable is 2000 A.

Calculate the resistance of the cable.

[3 marks]

Resistance = _____ Ω

Use the Physics Equations Sheet to answer questions **01.4** and **01.5**.

0 1 . 4 Write down the equation which links efficiency, total energy input and useful energy output.

[1 mark]

0 1 . 5 The total energy input to the National Grid from one power station is 34.2 GJ.

The National Grid has an efficiency of 0.992

Calculate the useful energy output from this power station to consumers in GJ.

[3 marks]

Useful energy output = _____ GJ

10

4.7.3.4 Transformers (HT only)

Question 37

June 2023 | 8463/2H | Original Q8

0 8 **Figure 21** shows a transformer used to power a lamp using the mains electricity supply.

Figure 21

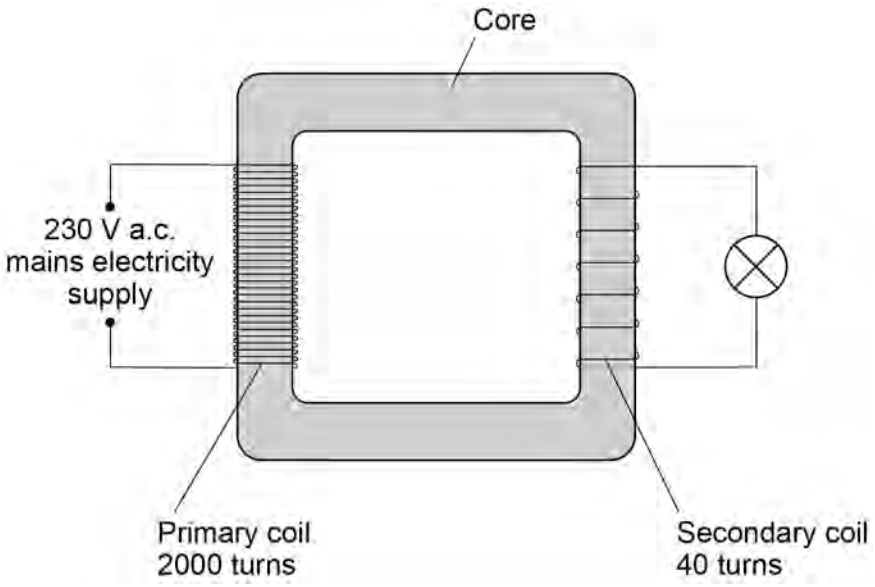

0 8 . 1 What material is used to make the core of the transformer?

Give the reason for using this material.

[2 marks]

Material _____

Reason _____

_____

4.7.3.4 Transformers (HT only)

Question 37 · continued

0 8 . 2 Determine the current in the secondary coil when the power output of the transformer is 6.9 W.

The transformer is 100% efficient.

Use the Physics Equations Sheet.

[5 marks]

Current in the secondary coil = _____ A

7

4.7.3.4 Transformers (HT only)

Question 38

June 2025 | 8463/2H | Original Q9

0 9 Transformers are used to change alternating potential differences.

0 9 . 1 **Figure 11** shows a transformer.

Figure 11

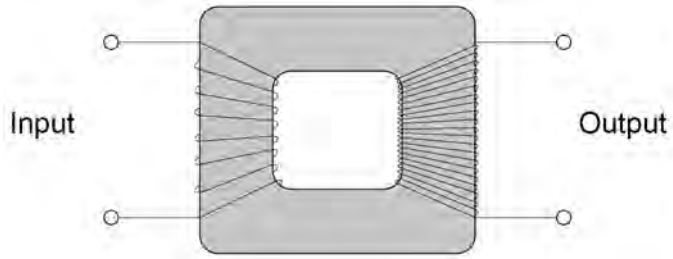

Why is the core of the transformer made from iron?

[1 mark]

Question 9 continues on the next page

4.7.3.4 Transformers (HT only)

Question 38 · continued

0 9 . 2 A transformer has 345 turns on the primary coil and 6000 turns on the secondary coil.

The potential difference across the secondary coil is 400 kV.

Calculate the potential difference across the primary coil.

Use the Physics Equations Sheet.

Give your answer in volts.

[4 marks]

Potential difference = _____ V

0 9 . 3 There is an alternating current in the primary coil of a transformer.

Explain why there is an alternating potential difference across the ends of the secondary coil of the transformer.

[3 marks]

8