AQA GCSE Physics | 8463

SPECIFICATION POINT 4.7.1.2

Magnetic fields

Past-paper questions

Tier	**Higher**
Question groups	**16**
Available paper years	**2006–2025**

Using this booklet

1. Answer the questions in order and show your working.
2. Original question numbers and marks are retained.
3. Print at actual size (100%) for measuring questions.
4. Use the companion answer booklet to check your work.

Name: _____ **Date:** _____

Whole questions are retained for context, so some parts assess other specification points. Current and legacy sources are labelled. Continue on extra paper if needed.

4.7.1.2 Magnetic fields

Question 01

November 2006 | PHY1B | Original Q5 | Legacy

QUESTION FIVE

Some substances give out radiation from the nuclei of their atoms.

5A A radioactive source emits alpha, beta and gamma radiation.

Which row in the table is correct?

	Deflected by a magnetic field?		
	Alpha	**Beta**	**Gamma**
1	no	no	yes
2	no	yes	no
3	yes	yes	no
4	yes	yes	yes

5B Americium oxide is used in smoke alarms. Atoms of americium can exist as different isotopes.

Which row in the table correctly describes the number of particles in the nucleus of an atom of each of two different isotopes of americium?

	Particles in each isotope	
1	different number of neutrons	different number of protons
2	different number of neutrons	same number of protons
3	same number of neutrons	different number of protons
4	same number of neutrons	same number of protons

4.7.1.2 Magnetic fields

Question 01 · continued

5C The radioactive americium oxide used in a smoke alarm emits alpha particles.

These particles . . .

1 add electrons to the air.

2 add neutrons to the air.

3 add protons to the air.

4 ionise particles in the air.

5D Four students discuss how to alter the rate of decay of a radioactive source.

Which student, **1**, **2**, **3** or **4**, is correct?

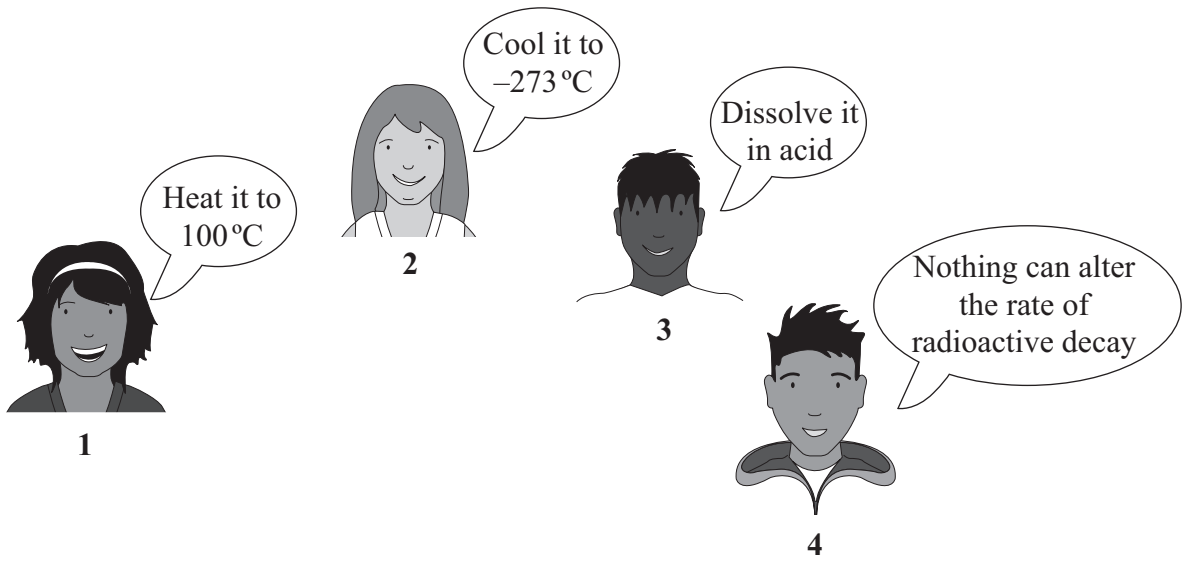

4.7.1.2 Magnetic fields

Question 02

June 2009 | PHY3H | Original Q2 | Legacy

2 The diagram shows some parts of a torch which works without batteries.
The coil is part of a complete circuit with the LED (light-emitting diode).

You have to shake the torch for a short time and then it is ready to use.

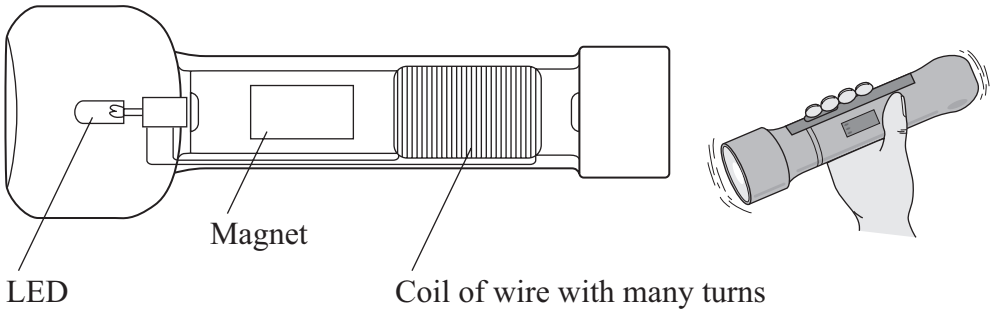

2 (a) Arrange the letters, **A**, **B**, **C**, **D** and **E**, in the correct order to explain how shaking the torch produces an electric current.

A An electric current is induced in the circuit.

B The magnetic field cuts through the coil.

C The magnet moves in and out of the coil.

D A potential difference (p.d.) is induced across the ends of the coil.

E The torch is shaken to and fro.

The first letter has been done for you.

E				

(2 marks)

2 (b) Give **two** changes which you would make to the design of the torch to increase the size of the induced potential difference.

1 .....

.....

2 .....

.....

(2 marks)

4.7.1.2 Magnetic fields

Question 02 · continued

for mark

2 (c) A few minutes after shaking, the LED gets dimmer and then stops giving out light.

A student tests the torch. She shakes it for a period of time. Then she switches it on and times how long the light lasts.

These are her results.

Period of time torch is shaken measured in seconds	How long the light lasts measured in seconds
30	168
60	312
90	420
120	546
150	654

2 (c) (i) What conclusion can the student come to on the basis of these results?

.....

.....

(1 mark)

2 (c) (ii) The student's friend says that the results are **not** reliable. Her friend is correct.

Give **two** reasons why.

1 .....

.....

.....

2 .....

.....

.....

(2 marks)

7

4.7.1.2 Magnetic fields

Question 03

June 2009 | PHY3H | Original Q7 | Legacy

7 The diagram shows a generator.
When the coil is rotated around the axle, a current is produced and the lamp lights up.

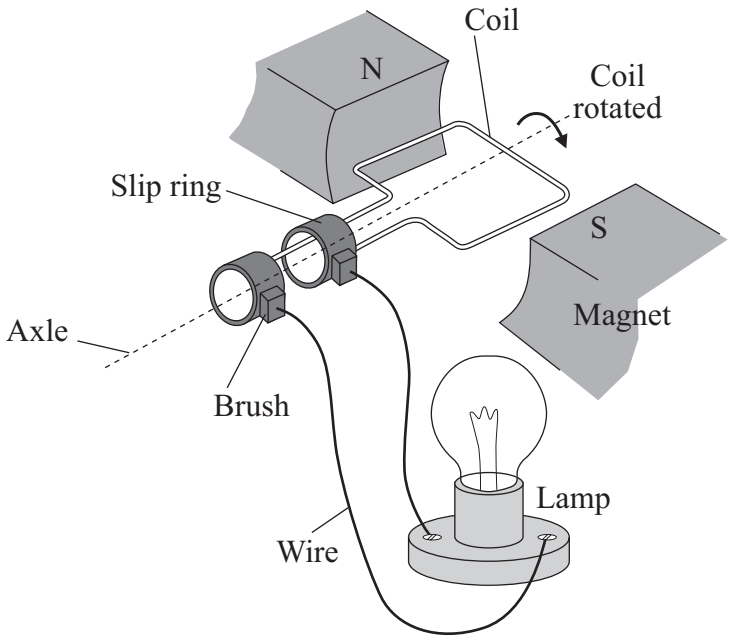

7 (a) Explain the purpose of the slip rings and brushes.

.....

.....

.....

(2 marks)

7 (b) Explain how this generator gives an a.c. rather than a d.c. output.

.....

.....

.....

(2 marks)

7 (c) In this design, the generator effect occurs because the coil rotates in a magnetic field.

How else can a generator effect occur?

.....

.....

(1 mark)

4.7.1.2 Magnetic fields

Question 04

June 2010 | PHY1BP | Original Q7 | Legacy

QUESTION SEVEN

In 1896, Henri Becquerel was doing an experiment with uranium. He first thought that uranium absorbed energy from the Sun and then re-emitted the energy as X-rays. Then, on a cloudy day, he found that the uranium emitted radiation even when the uranium sample was wrapped in black paper.

7A This suggests that . . .

1 his original theory was wrong and further investigation was needed.

2 his test was fair but more variables needed to be controlled.

3 his original theory was correct and further investigation was needed.

4 his test was not fair and more variables needed to be controlled.

7B Becquerel passed the radiation emitted by uranium through a magnetic field. He found that there were three different types of radiation.

The diagram shows the paths of the three types of radiation, **X**, **Y** and **Z**, in the magnetic field.

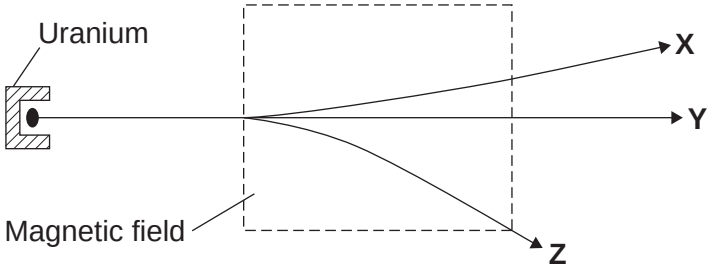

Later, Ernest Rutherford called the three types of radiation alpha, beta and gamma.

Which is the correct row in the table?

	X	Y	Z
1	alpha	beta	gamma
2	alpha	gamma	beta
3	beta	alpha	gamma
4	beta	gamma	alpha

Question 04 · continued

7C The radiation emitted by uranium can also be deflected in an electric field between two charged plates.

The diagram shows the paths taken by the three types of radiation, **P**, **Q** and **R**, in an electric field.

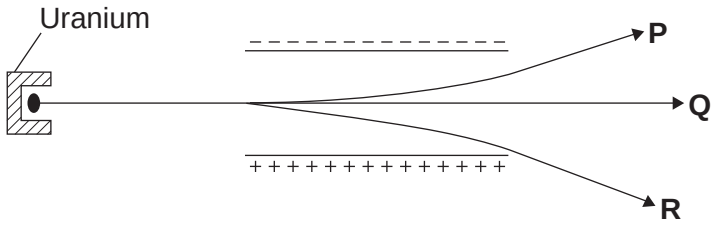

The explanation for the different paths is that . . .

1 **P** and **R** have the same electric charge and **Q** is uncharged.

2 **P** and **R** are oppositely charged and **P** has a larger mass than **R**.

3 **P** and **R** are oppositely charged and **R** has a larger charge than **P**.

4 **Q** is uncharged and has a larger mass than both **P** and **R**.

7D Rutherford measured the range in air of the three types of radiation.

Which row of the table gives the correct order of range?

	Shortest range ⟶ **Longest range**		
1	alpha	beta	gamma
2	alpha	gamma	beta
3	beta	alpha	gamma
4	beta	gamma	alpha

4.7.1.2 Magnetic fields

Question 05

November 2010 | PHY1BP | Original Q8 | Legacy

QUESTION EIGHT

Radioactive isotopes may emit alpha, beta or gamma radiation.

A sixth-form student carried out experiments on different radioactive isotopes, **S**, **T** and **V**.

She was told that:

- all three types of radiation are emitted
- the experiments must be done in a vacuum.

In the first experiment, she put different absorbers in turn between each of the isotopes and a detector. She measured the count rate from each isotope.

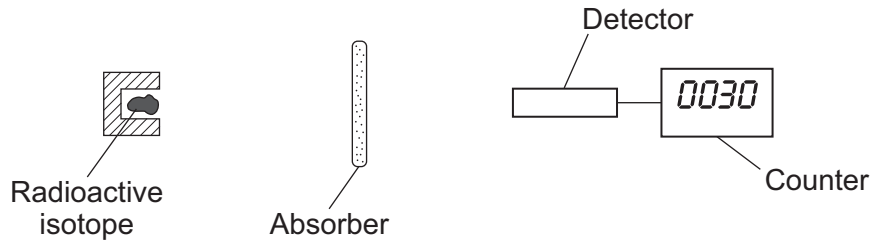

The results are shown in **Table 1**.

Table 1

Isotope	Count rate in counts per second			
	No absorber	Sheet of paper	10 mm of aluminium	100 mm of lead
S	40	40	40	2
T	60	20	18	4
V	75	74	0	0

8A From these results, it can be concluded that isotope **V** emits . . .

1 alpha radiation only.

2 beta radiation only.

3 gamma radiation only.

4 alpha and gamma radiation.

8B Which source emits more than one type of radiation?

1 **S**

2 **T**

3 **V**

4 none of them

Question 05 · continued

8C In a second experiment, the absorber was replaced by a magnetic field.

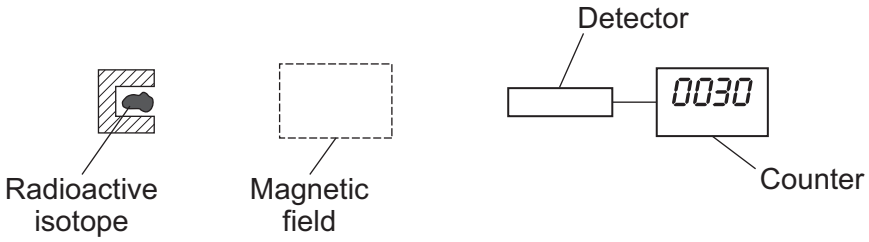

The results are shown in **Table 2**.

Table 2

Isotope	Count rate in counts per second	
	Without magnetic field	With magnetic field
S	40	40
T	60	20
V	75	0

Which one of the following conclusions from the experiment is correct?

1 **V** could be a gamma emitter and a beta emitter.

2 **V** and **T** both emit gamma radiation.

3 **S** is either an alpha emitter or a beta emitter.

4 **T** could be an alpha emitter and a gamma emitter.

8D Some types of radiation are deflected by a magnetic field.

This is because the radiation . . .

1 is like a wave.

2 has a positive charge or a negative charge.

3 has north poles and south poles.

4 has no mass.

4.7.1.2 Magnetic fields

Question 06

January 2011 | PHY3H | Original Q7 | Legacy

7 Jupiter has a magnetic field which is more powerful than the magnetic field of any other planet in the Solar System.

Some scientists have suggested that, in the future, a long metal cable could hang from a satellite which orbits Jupiter. The cable would be part of a complete circuit.
This arrangement would produce electricity for the satellite.

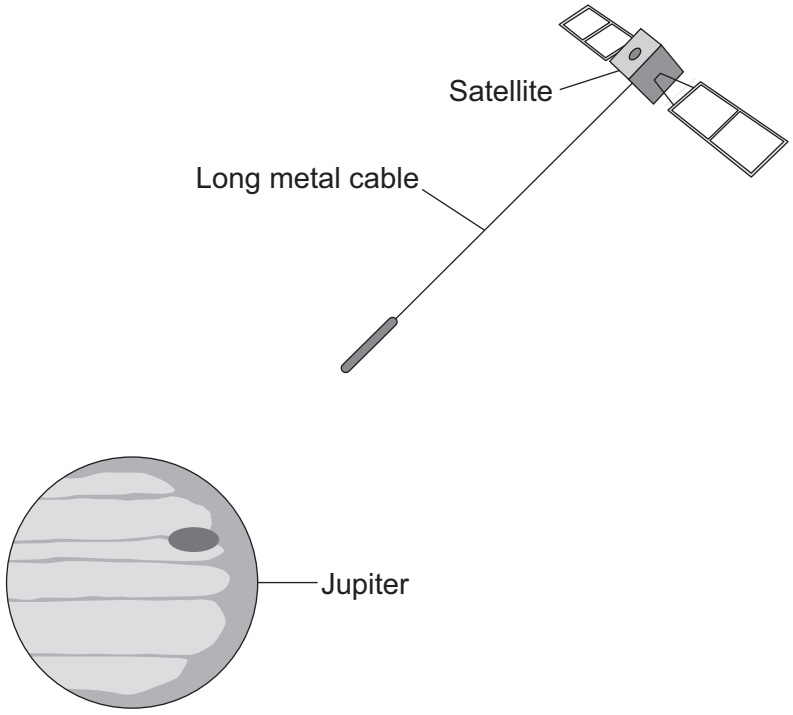

7 (a) (i) What is the name of the effect that would produce electricity for the satellite?

.....

(1 mark)

7 (a) (ii) Describe how a potential difference is produced across the ends of the metal cable.

.....

.....

.....

.....

(2 marks)

4.7.1.2 Magnetic fields

Question 06 · continued

7 (a) (iii) Why will the potential difference produce an electric current?

.....

.....

(1 mark)

7 (b) Other satellites in the Solar System could use the same effect to produce electricity in a similar way.

Suggest **two** reasons why the potential difference produced for another satellite might be **smaller** than the potential difference for the satellite in the diagram.

1 .....

.....

2 .....

.....

(2 marks)

6

4.7.1.2 Magnetic fields

Question 07

March 2011 | PHY1AP | Original Q8 | Legacy

QUESTION EIGHT

The diagram shows a power station supplying electricity to the National Grid. There are four transformers in the system, labelled **P**, **Q**, **R** and **S**.

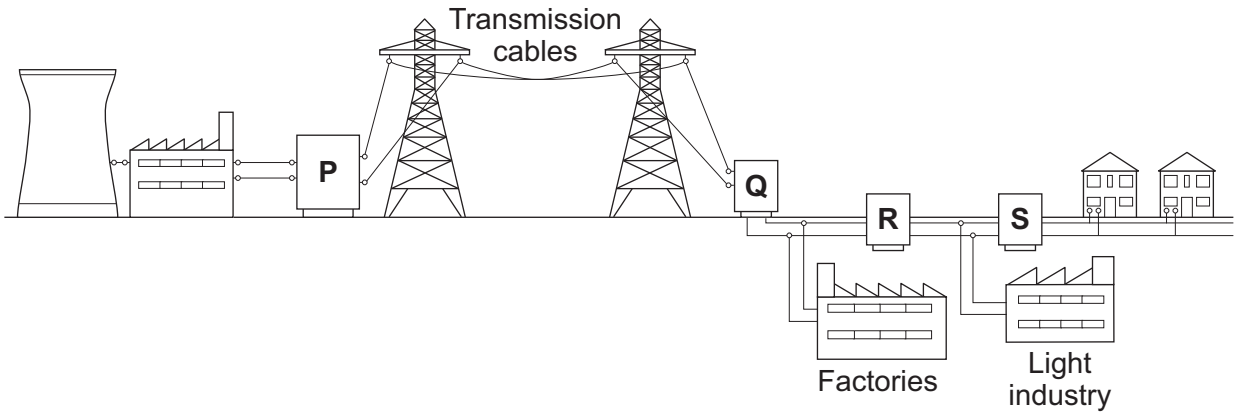

8A Which row in the table correctly describes each transformer?

	P	Q	R	S
1	step up	step down	step down	step down
2	step down	step up	step up	step up
3	step up	step down	step up	step down
4	step up	step up	step down	step down

8B The voltage across the overhead transmission cables is very high.

The best explanation for this is that . . .

1 it allows thinner cables to be used and the energy loss from the cables is reduced.

2 the energy loss from the cables is reduced and it allows the distance between pylons to be reduced.

3 the distance between the pylons can be reduced and thicker cables can be used.

4 it allows the current to travel more slowly and thicker cables can be used.

Question 07 · continued

8C Changing the voltage between the power station and the transmission cables using transformer **P** also changes the current flowing and the efficiency of distribution.

Which row of the table correctly shows these changes?

	Voltage	Current	Efficiency
1	increases	increases	increases
2	decreases	decreases	increases
3	decreases	decreases	decreases
4	increases	decreases	increases

8D Transmission cables can either be suspended from pylons above ground or they can be buried underground.

An electromagnetic field is produced when an electric current flows through a cable. Some people think that these fields can cause a health risk.

The graph shows how the strength of the electromagnetic field varies with distance from the cable for both overhead cables and underground cables.

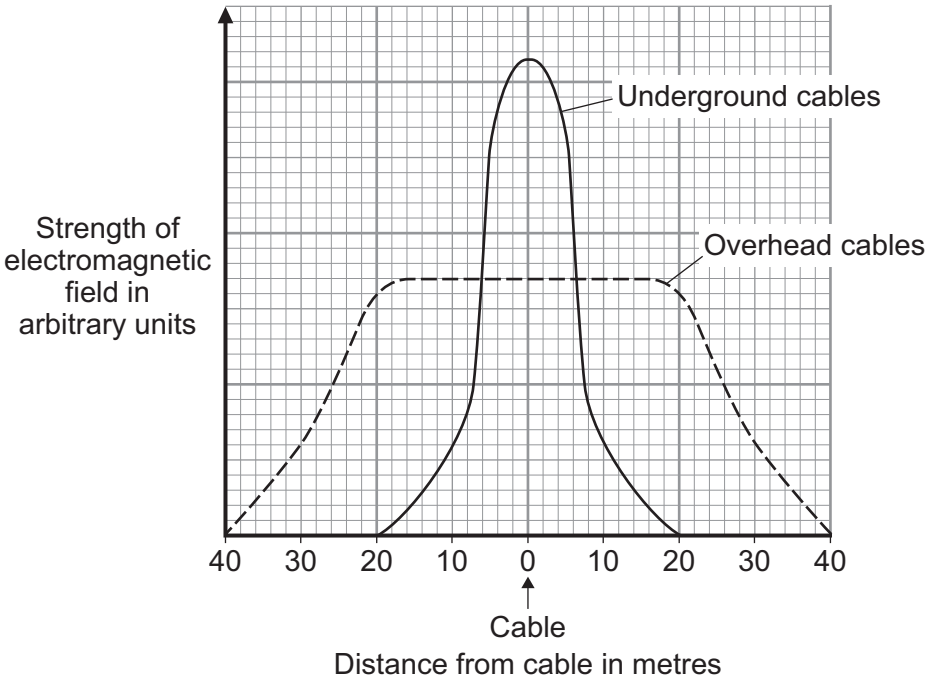

Which of the following conclusions could be made from the graph?

1 When you are within 5 metres of the cable, the possible risk to health is bigger with an underground cable.

2 The possible health risk from overhead cables falls to zero when you are 20 metres away.

3 The biggest possible health risk from overhead cables occurs when you are 40 metres away.

4 Between 10 and 40 metres away, the biggest possible health risk is from underground cables.

4.7.1.2 Magnetic fields

Question 08

June 2011 | PHY1BP | Original Q6 | Legacy

QUESTION SIX

Ernest Rutherford did many experiments in studying the properties of radioactive sources. He gave names to the three types of radiation emitted by radioactive sources.

One experiment used apparatus similar to that shown.

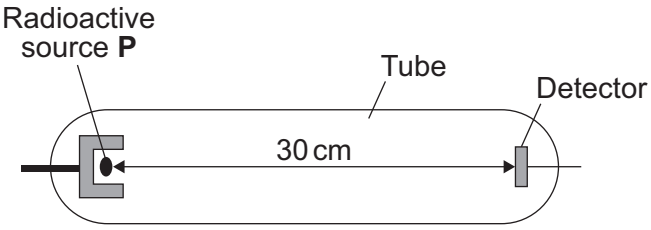

6A Rutherford found that when the air in the tube was removed, the radiation from **P** was detected. When the air was returned to the tube, no radiation was detected.

The radioactive source **P** emitted . . .

1 alpha particles.

2 beta particles.

3 gamma rays.

4 X-rays.

6B Another radioactive source, **Q**, was used. When a magnetic field was applied across the tube with no air inside, it made no difference to the radiation detected.

This shows that **Q** emits . . .

1 alpha and beta particles.

2 alpha particles and gamma rays.

3 beta particles only.

4 gamma rays only.

4.7.1.2 Magnetic fields

Question 08 · continued

6C The diagram shows three types of radiation, **L**, **M** and **N**, from a radioactive source. They are passing through a magnetic field.

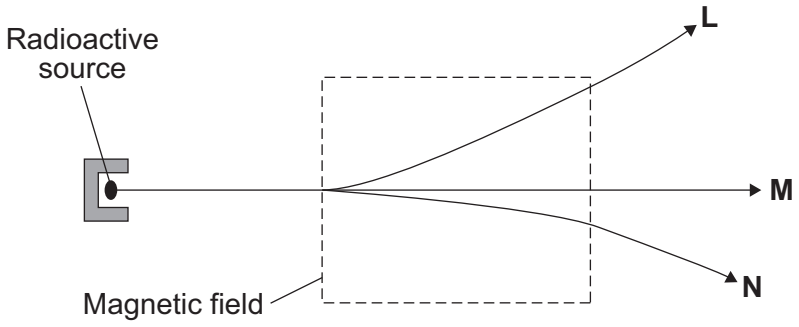

Radiation **N** is deflected less than radiation **L** and in the opposite direction.

This is because radiation **N** consists of particles which . . .

1 have a smaller mass than **L** and the same charge.

2 have a bigger mass than **L** and the same charge.

3 have a smaller mass than **L** and the opposite charge.

4 have a bigger mass than **L** and the opposite charge.

6D Which row in the table correctly identifies the three types of radiation emitted by radioactive materials?

	Alpha	Beta	Gamma
1	an electron	a helium nucleus	an electromagnetic wave
2	a helium nucleus	an electromagnetic wave	an electron
3	a helium nucleus	an electron	an electromagnetic wave
4	an electron	an electromagnetic wave	an electron

4.7.1.2 Magnetic fields

Question 09

June 2016 | PH2HP | Original Q2 | Legacy

2 Alpha particles, beta particles and gamma rays are types of nuclear radiation.

2 (a) Describe the structure of an alpha particle.

[1 mark]

_____

_____

2 (b) Nuclear radiation can change atoms into ions by the process of ionisation.

2 (b) (i) Which type of nuclear radiation is the least ionising?

[1 mark]

Tick (✓) **one** box.

alpha particles ☐ beta particles ☐ gamma rays ☐

2 (b) (ii) What happens to the structure of an atom when the atom is ionised?

[1 mark]

_____

_____

2 (c) People working with sources of nuclear radiation risk damaging their health.

State **one** precaution these people should take to reduce the risk to their health.

[1 mark]

_____

_____

4.7.1.2 Magnetic fields

Question 09 · continued

2 (d) **In this question you will be assessed on using good English, organising information clearly and using specialist terms where appropriate.**

The type of radiation emitted from a radioactive source can be identified by comparing the properties of the radiation to the properties of alpha, beta and gamma radiation.

Describe the properties of alpha, beta and gamma radiation in terms of their:

- penetration through materials
- range in air
- deflection in a magnetic field.

[6 marks]

Extra space

10

4.7.1.2 Magnetic fields

Question 10

1 0 The circle in **Figure 18** represents a straight wire carrying a current. The cross shows that the current is into the plane of the paper.

Figure 18



1 0 . 1 Complete **Figure 18** to show the magnetic field pattern around the wire.

[2 marks]

1 0 . 2 The magnetic flux density 10 cm from the wire is 4 microtesla.

Which of the following is the same as 4 microtesla?

Tick **one** box.

[1 mark]

4×10^{-2} T ☐

4×10^{-3} T ☐

4×10^{-6} T ☐

4×10^{-9} T ☐

Question 10 continues on the next page

4.7.1.2 Magnetic fields

Question 10 · continued

1 0 . 3 **Figure 19** shows a simple electric motor.

Figure 19

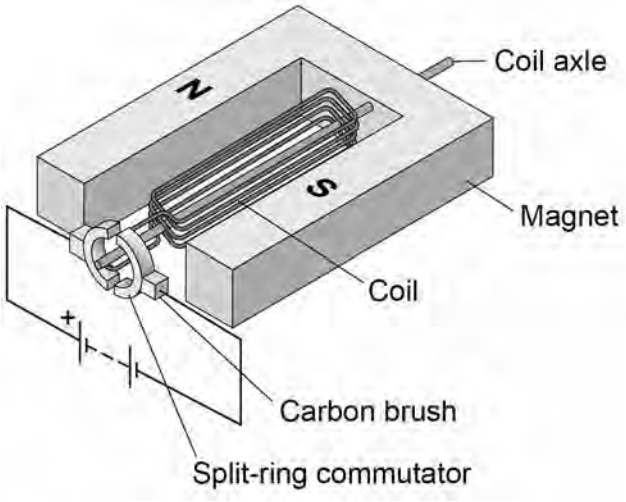

When there is a current in the coil, the coil rotates continuously.

Explain why.

[4 marks]

7

4.7.1.2 Magnetic fields

Question 11

June 2019 | 8463/2H | Original Q4

0 4 . 1 **Figure 5** shows a solenoid.

Draw the magnetic field of the solenoid on **Figure 5**.

[2 marks]

Figure 5

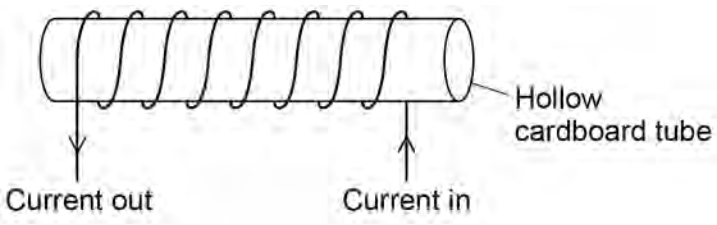

0 4 . 2 **Figure 6** shows two iron rods placed inside a solenoid.

Figure 6

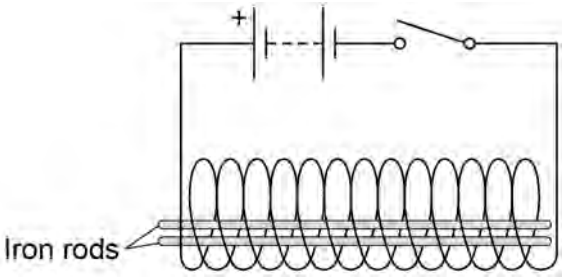

Explain why the iron rods move apart when the switch is closed.

[2 marks]

Question 11 · continued

A student investigated the strength of an electromagnet.

The student investigated how the strength depended on:
- the current in the wire
- the number of turns of wire around the iron core.

Figure 7 shows the equipment used.

Figure 7

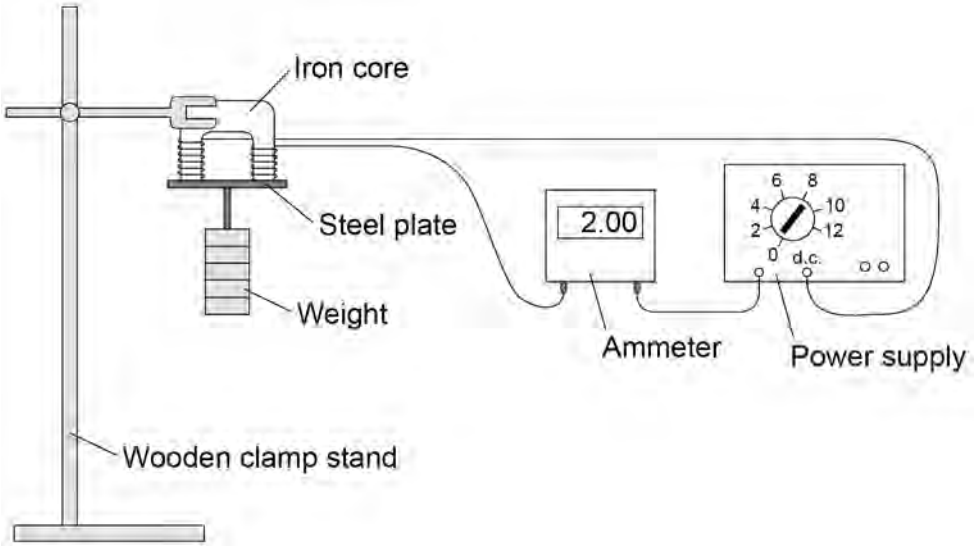

The student measured the strength of the electromagnet as the maximum weight the electromagnet could hold.

0 4 . 3 **Table 1** shows the results.

Table 1

Current in amps	Number of turns of wire	Maximum weight in newtons
1.0	30	6.5
1.5	20	6.4
2.0	10	3.7

Explain why the method used by the student is **not** valid for this investigation.

[2 marks]

Question 11 · continued

A second student repeated the investigation using the same equipment.

Figure 8 shows the second student's results.

Figure 8

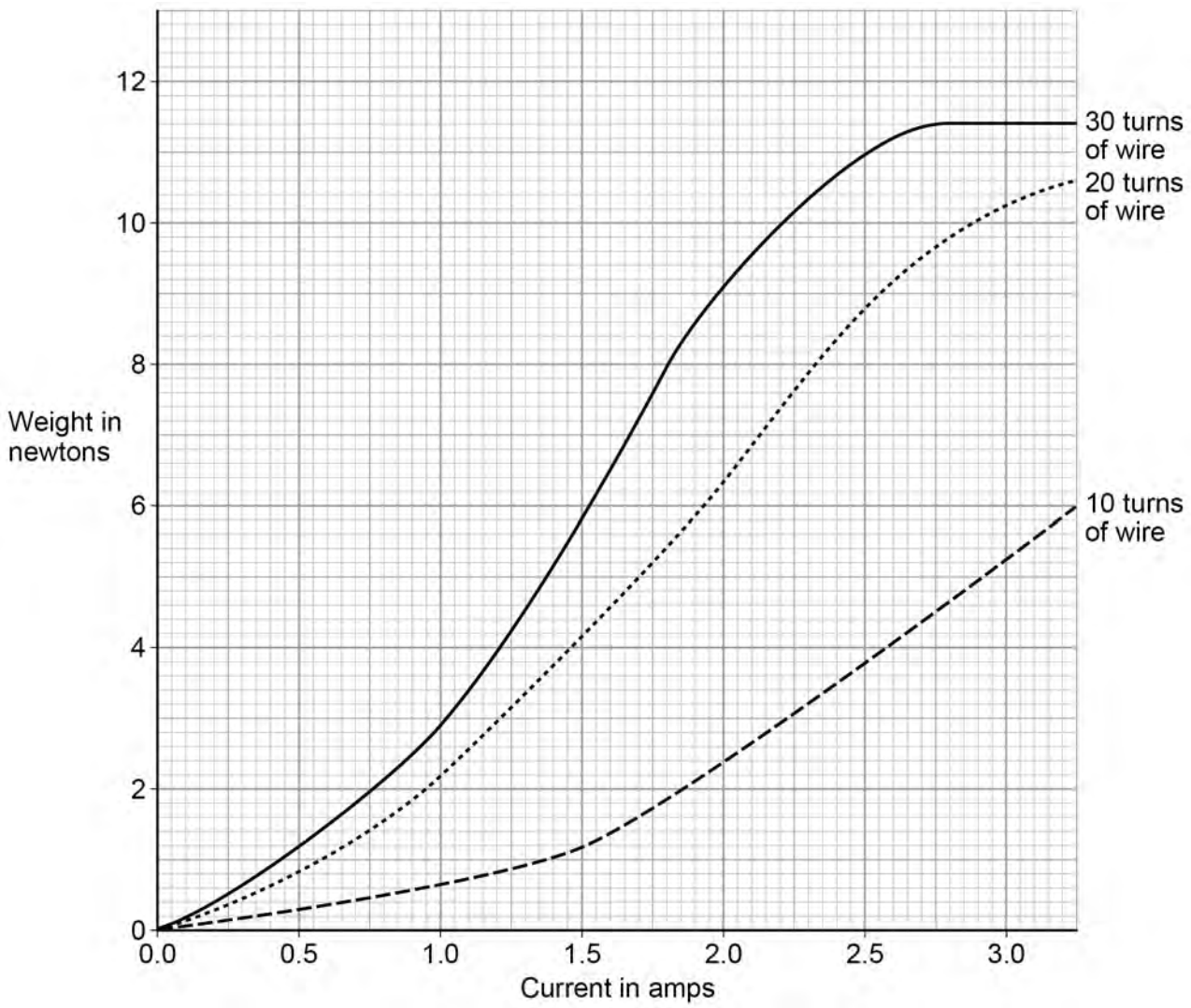

0 4 . 4 How does increasing the current in the wire affect the strength of the electromagnet, when the electromagnet has 30 turns of wire?

[1 mark]

4.7.1.2 Magnetic fields

Question 11 · continued

0 4 . 5 How does increasing the number of turns of wire from 10 to 20 affect the strength of the electromagnet, compared to increasing the number of turns of wire from 20 to 30?

[1 mark]

8

Turn over for the next question

4.7.1.2 Magnetic fields

Question 12

November 2021 | 8463/2H | Original Q9

0 9 A teacher demonstrated how a magnetic field can cause a copper rod to accelerate.

The teacher placed the copper rod on two brass rails in a magnetic field.

The copper rod was able to move.

Figure 16 shows the equipment used.

Figure 16

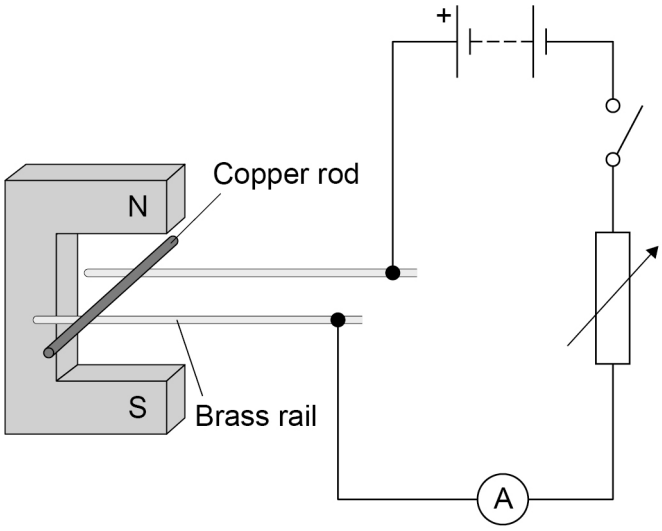

4.7.1.2 Magnetic fields

Question 12 · continued

0 9 . 1 The teacher closes the switch and the copper rod accelerates.

Explain how Fleming's left hand rule can be used to predict the direction in which the copper rod will move.

[5 marks]

0 9 . 2 Suggest **two** changes to the equipment that would increase the force on the copper rod.

[2 marks]

1

2

Question 9 continues on the next page

4.7.1.2 Magnetic fields

Question 12 · continued

0 9 . 3 The teacher closed the switch and the copper rod accelerated uniformly from rest for 0.15 s.

The current in the copper rod was 1.7 A.

mass of copper rod = 4.0 g

length of copper rod in the magnetic field = 0.050 m

magnetic flux density = 0.30 T

Calculate the maximum possible velocity of the copper rod when it left the magnetic field.

[6 marks]

Maximum velocity = _____ m/s

13

4.7.1.2 Magnetic fields

Question 13

June 2022 | 8463/2HR | Original Q7

0 7 The National Grid uses transformers to change potential difference (pd).

Figure 12 shows a transformer.

Figure 12

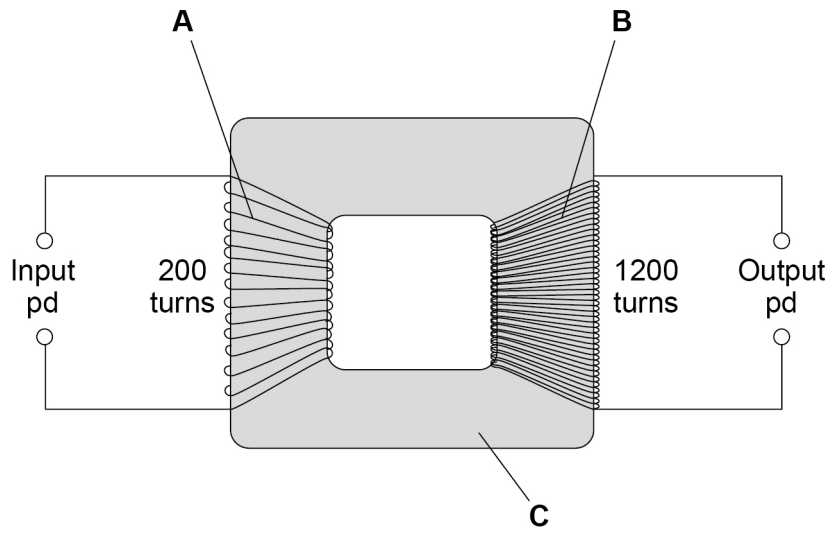

0 7 . 1 Identify the parts of the transformer labelled in **Figure 12**.

[2 marks]

A _____

B _____

C _____

0 7 . 2 There is an alternating input pd of 230 V.

Determine the output pd.

Use the Physics Equations Sheet.

[3 marks]

_____

_____

_____

_____

_____

Output pd = _____ V

4.7.1.2 Magnetic fields

Question 13 · continued

0 7 . 3 The input pd causes an alternating current.

Explain why there is an alternating current in the output when the transformer is connected to a circuit.

[3 marks]

Question 7 continues on the next page

Question 13 · continued

Figure 13 shows a large cable supported by two wooden poles. The cable is connected to an electricity supply.

Figure 13

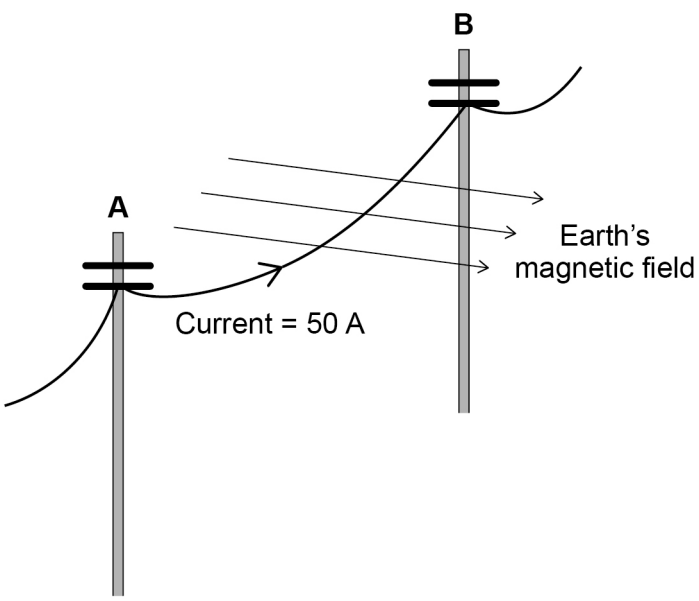

0 7 . 4 There is a force on the cable due to the Earth's magnetic field when the current is in the direction **A** to **B**.

What is the direction of this force?

[1 mark]

Tick (✓) **one** box.

Down ☐

Left ☐

Right ☐

Up ☐

4.7.1.2 Magnetic fields

Question 13 · continued

0 7 . 5 The cable experiences a force of 0.045 N due to the Earth's magnetic field.

magnetic flux density = 60 μT

current = 50 A

Calculate the length of the cable between **A** and **B**.

Use the Physics Equations Sheet.

[4 marks]

Length = _____ m

0 7 . 6 State **one** assumption you made in your calculation.

[1 mark]

_____

14

4.7.1.2 Magnetic fields

Question 14

June 2023 | 8463/2H | Original Q4

0 4 A megaphone uses a loudspeaker to amplify sounds that are detected by a microphone.

Figure 10 shows a megaphone and microphone.

Figure 10

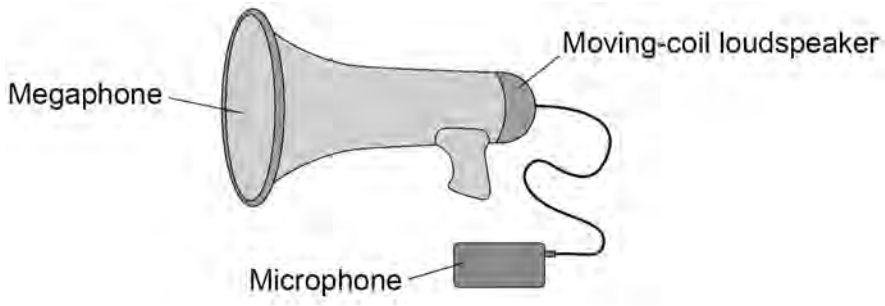

0 4 . 1 Complete the sentence.

[1 mark]

The microphone is used to convert the pressure variations in sound waves into variations in _____ .

Question 14 · continued

0 4 . 2 The loudspeaker contains a permanent magnet.

Which diagram in **Figure 11** shows the direction of the magnetic field between the north pole and the south pole of the magnet?

The magnets are shown in cross-section.

[1 mark]

Tick (✓) **one** box.

Figure 11

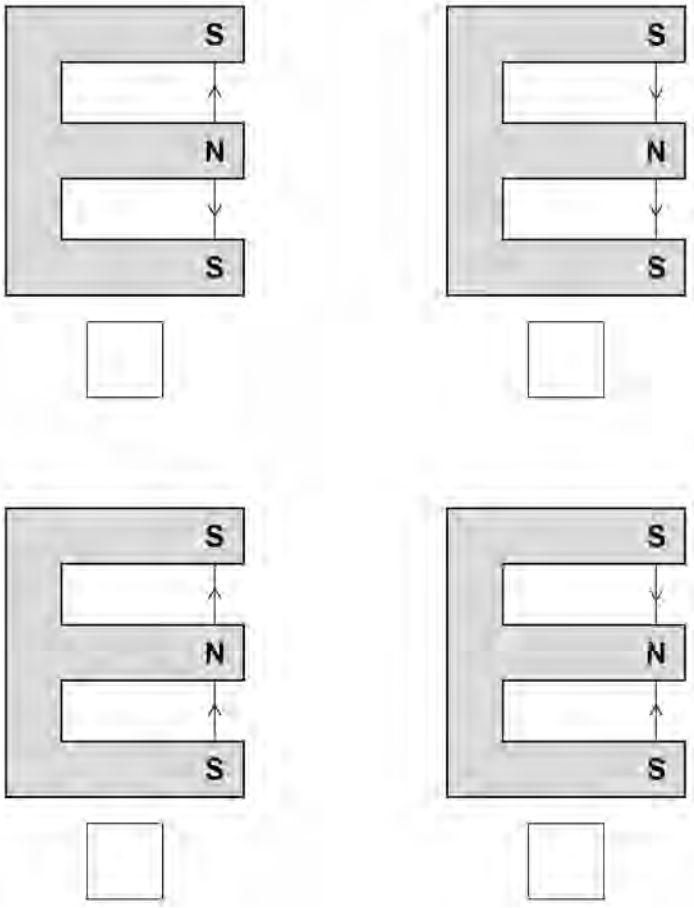

0 4 . 3 Some magnets are permanent magnets and some are induced magnets.

What is an induced magnet?

[1 mark]

Question 14 · continued

Figure 12 shows the parts of the loudspeaker in the megaphone.

Figure 12

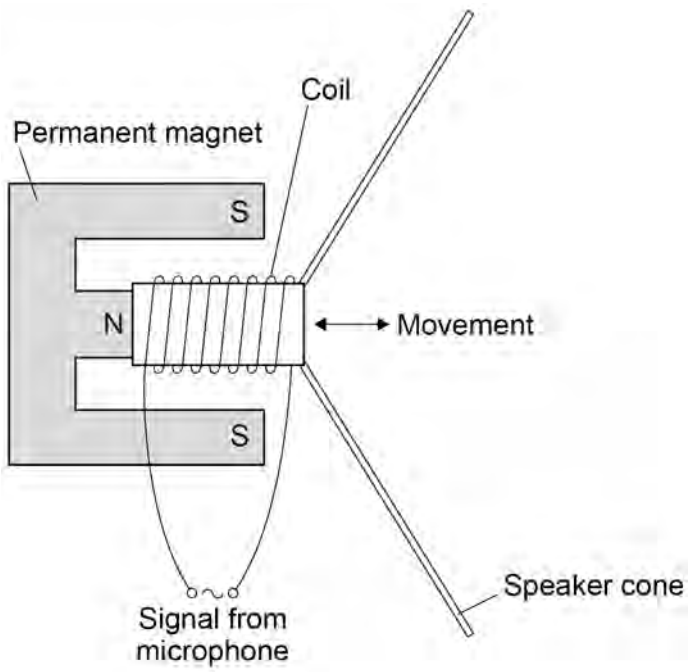

A current in the coil of the loudspeaker causes the coil to move.

0 4 . 4 What is the name of the effect that causes the coil to move?

[1 mark]

Tick (✓) **one** box.

- Electromagnet effect ☐
- Induction effect ☐
- Motor effect ☐
- Speaker effect ☐

0 4 . 5 When the current in the coil is 16 mA, the force on the coil is 0.013 N.

The length of the wire that makes up the coil is 6.5 m.

Calculate the magnetic flux density around the coil in the electromagnet.

Use the Physics Equations Sheet.

[4 marks]

Magnetic flux density = _____ T

Question 4 continues on the next page

0 4 . 6 Megaphones can produce very loud sounds.

A person's hearing can be affected by age and by working in a loud environment.

Figure 13 shows how frequency affects the minimum sound level that can be heard by three different people, **A**, **B** and **C**.

Figure 13

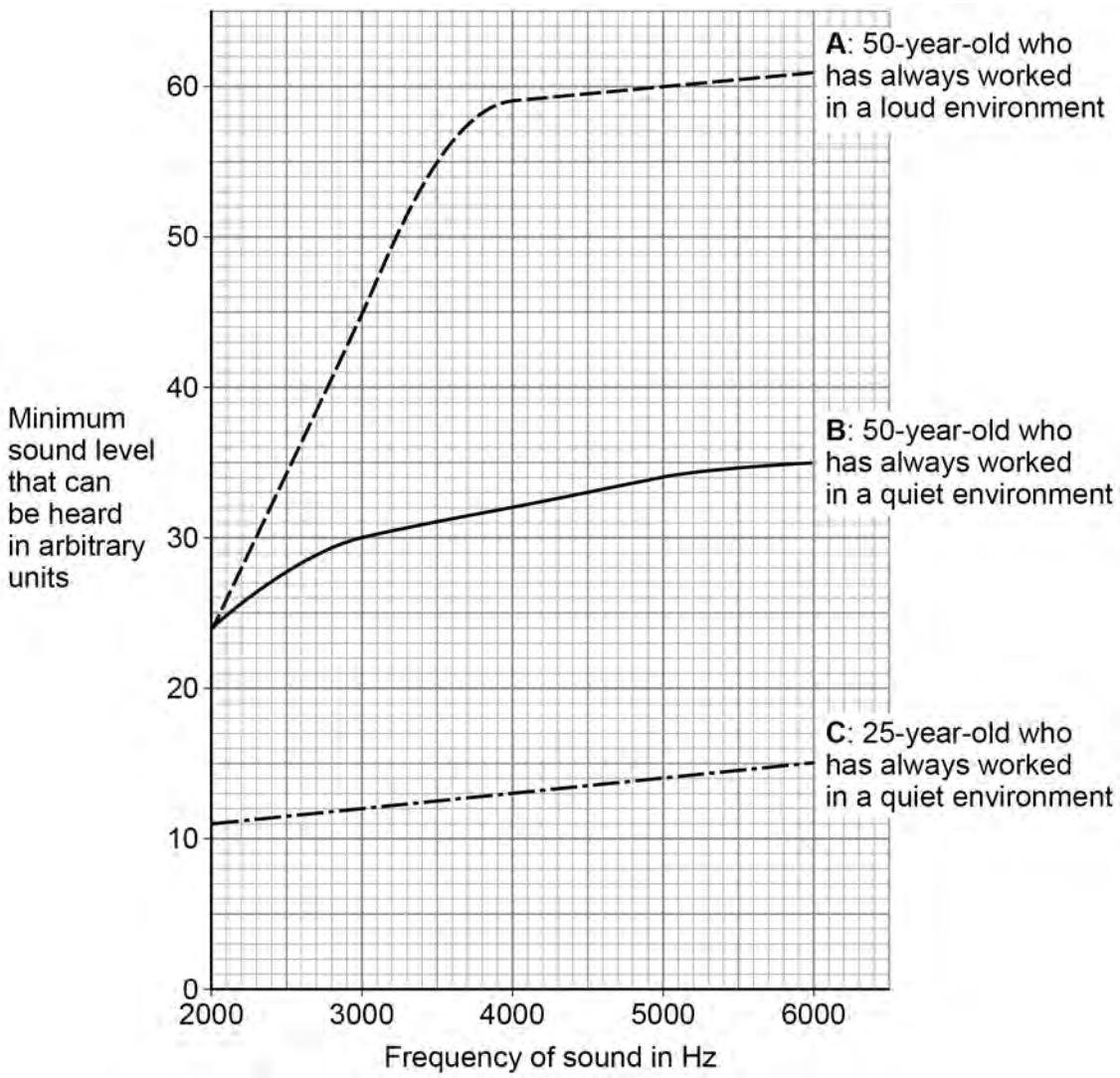

4.7.1.2 Magnetic fields

Question 14 · continued

Compare how different factors affect the minimum sound level that these people can hear.

[4 marks]

12

4.7.1.2 Magnetic fields

Question 15

June 2024 | 8463/2H | Original Q8

0 8 **Figure 13** shows some apparatus used by a teacher in a demonstration.

Figure 13

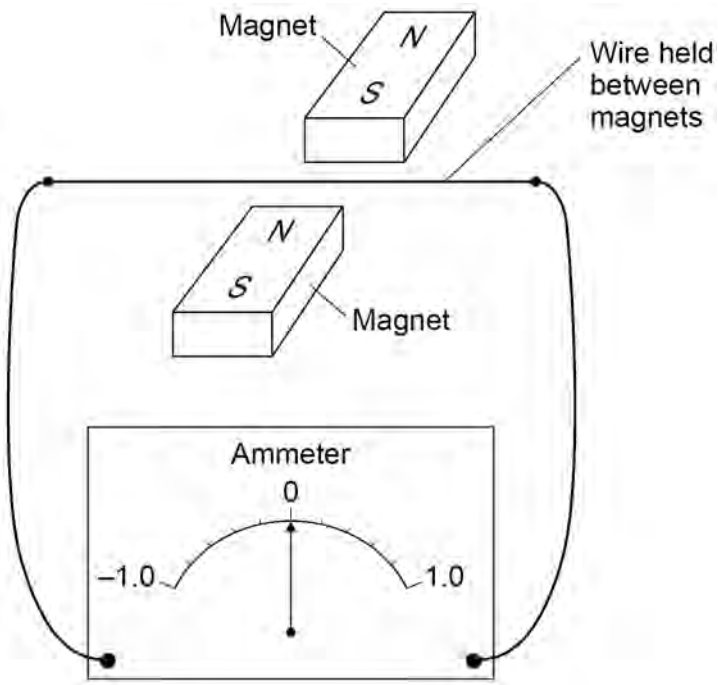

The teacher moved the wire upwards between the magnets.

The needle on the ammeter deflected to a value of +0.4 mA and then returned to zero.

0 8 . 1 What effect did this demonstrate?

[1 mark]

4.7.1.2 Magnetic fields

Question 15 · continued

0 8 . 2 Explain why a current was detected when the wire in **Figure 13** was moved upwards.

[3 marks]

0 8 . 3 The teacher reversed the direction of the magnetic field.

The teacher replaced the wire in its original position.

The teacher moved the wire upwards in the same way as before.

What was the deflection of the needle on the ammeter?

[1 mark]

Tick (✓) **one** box.

The needle will deflect to –0.4 mA. ☐

The needle will not move. ☐

The needle will deflect to +0.4 mA. ☐

Question 8 continues on the next page

4.7.1.2 Magnetic fields

Question 15 · continued

0 8 . 4 **Figure 14** shows a sound wave incident on the diaphragm of a moving-coil microphone.

The inside of the microphone includes a small coil of wire and a magnet.

Figure 14

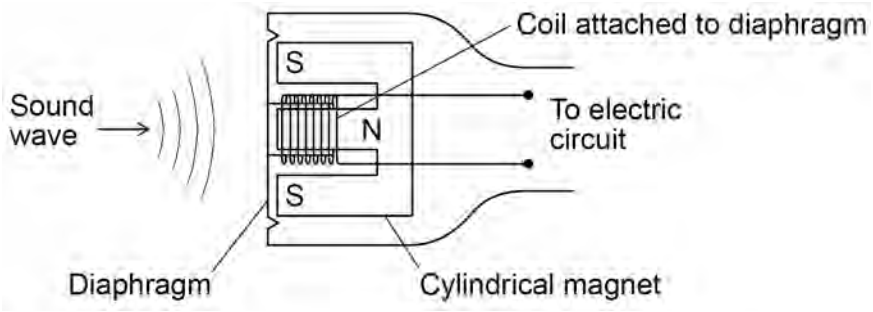

Explain why the sound waves have an effect on the electric circuit.

[3 marks]

8

4.7.1.2 Magnetic fields

Question 16

June 2025 | 8463/2H | Original Q7

0 7 **Figure 7** shows some apparatus used to demonstrate the motor effect.

Figure 7

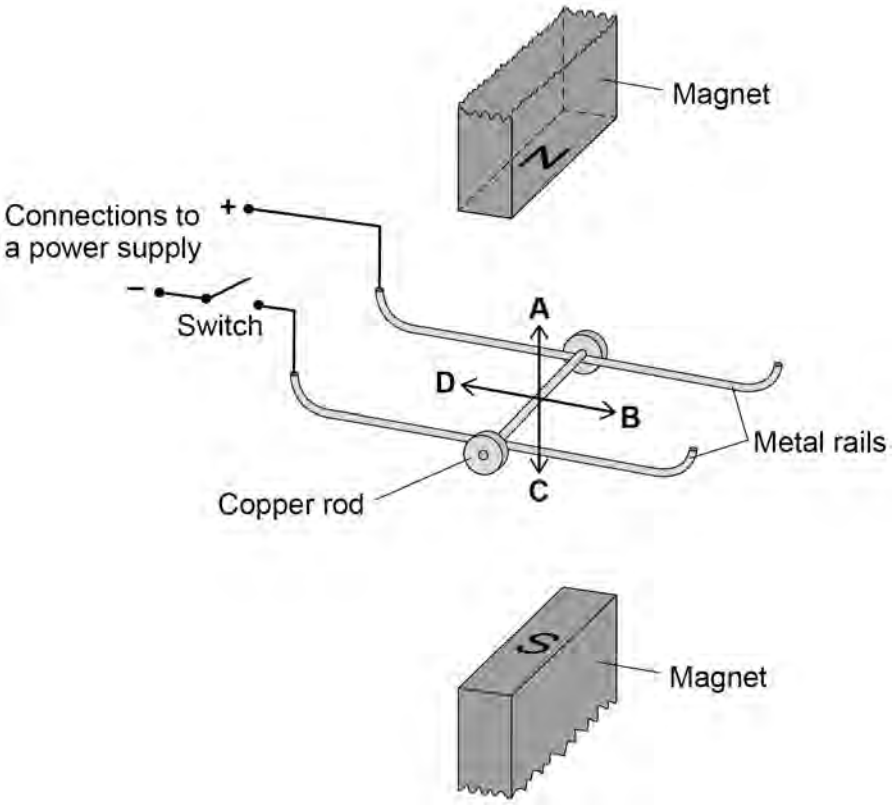

When the switch is closed the copper rod accelerates.

0 7 . 1 What direction is the acceleration of the copper rod?

[1 mark]

Tick (✓) **one** box.

A ☐

B ☐

C ☐

D ☐

4.7.1.2 Magnetic fields

Question 16 · continued

0 7 . 2 The copper rod has a mass of 5.0 g.

The length of the copper rod in the magnetic field is 0.070 m.

The magnetic flux density is 0.30 T.

Calculate the initial acceleration of the rod when the current in the rod is 2.0 A.

Use the Physics Equations Sheet.

[5 marks]

Initial acceleration = _____ m/s^2

Question 7 continues on the next page

Question 16 · continued

Figure 8 shows a simple motor.

There is a magnetic field between the two permanent magnets.

When there is a current in the coil, a magnetic field is produced around the coil.

Figure 8

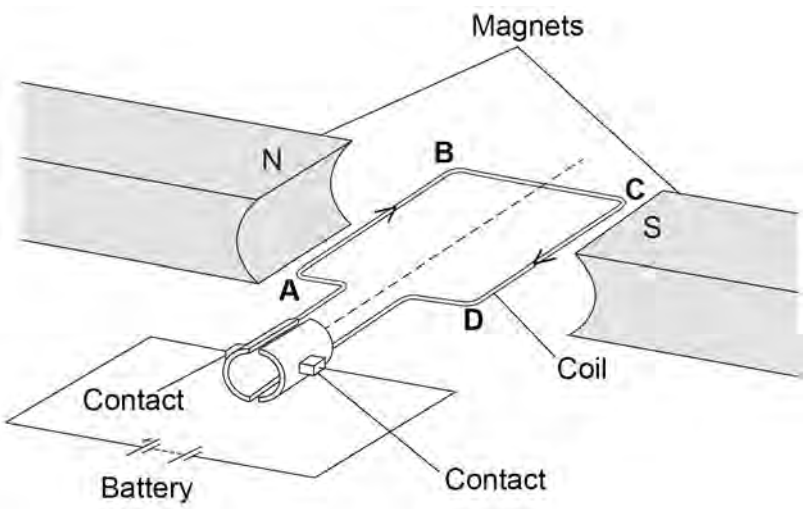

0 7 . 3 Explain how these magnetic fields cause the coil to continuously rotate.

[4 marks]

4.7.1.2 Magnetic fields

Question 16 · continued

0 7 . 4 In **Figure 8** the coil of the motor is in a horizontal position.

Explain why the resultant moment on the coil is zero when the coil is in a vertical position.

[2 marks]

12

Turn over for the next question