AQA GCSE Physics | 8463

SPECIFICATION POINT 4.5.2

Work done and energy transfer

Past-paper questions

Tier	**Higher**
Question groups	**22**
Available paper years	**2003–2024**

Using this booklet

1. Answer the questions in order and show your working.
2. Original question numbers and marks are retained.
3. Print at actual size (100%) for measuring questions.
4. Use the companion answer booklet to check your work.

Name: _____ **Date:** _____

Whole questions are retained for context, so some parts assess other specification points. Current and legacy sources are labelled. Continue on extra paper if needed.

4.5.2 Work done and energy transfer

Question 01

June 2003 | 3451H | Original Q10 | Legacy

10 A car travelling along a straight road has to stop and wait at red traffic lights. The graph shows how the velocity of the car changes after the traffic lights turn green.

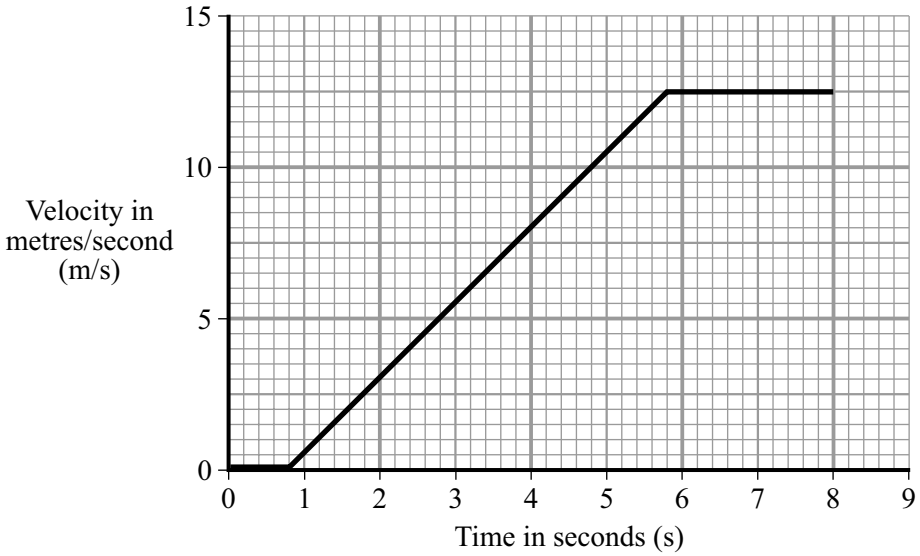

(a) Between the traffic lights changing to green and the car starting to move there is a time delay. This is called the reaction time. Write down **one** factor that could affect the driver's reaction time.

.....

(1 mark)

(b) Calculate the distance the car travels while accelerating. Show clearly how you work out your answer.

.....

.....

Distance = ...metres

(3 marks)

(c) Calculate the acceleration of the car. Show clearly how you work out your final answer and give the units.

.....

.....

.....

Acceleration = ...

(4 marks)

4.5.2 Work done and energy transfer

Question 01 · continued

June 2003 | 3451H | Original Q10 | Legacy

MARGIN BLANK

(d) The mass of the car is 900 kg.

(i) Write down the equation that links acceleration, force and mass.

.....

(1 mark)

(ii) Calculate the force used to accelerate the car. Show clearly how you work out your final answer.

.....

.....

Force = ...newtons

(2 marks)

11

4.5.2 Work done and energy transfer

Question 02

June 2003 | 3462H3 | Original Q8 | Legacy

8 A car travelling along a straight road has to stop and wait at red traffic lights. The graph shows how the velocity of the car changes after the traffic lights turn green.

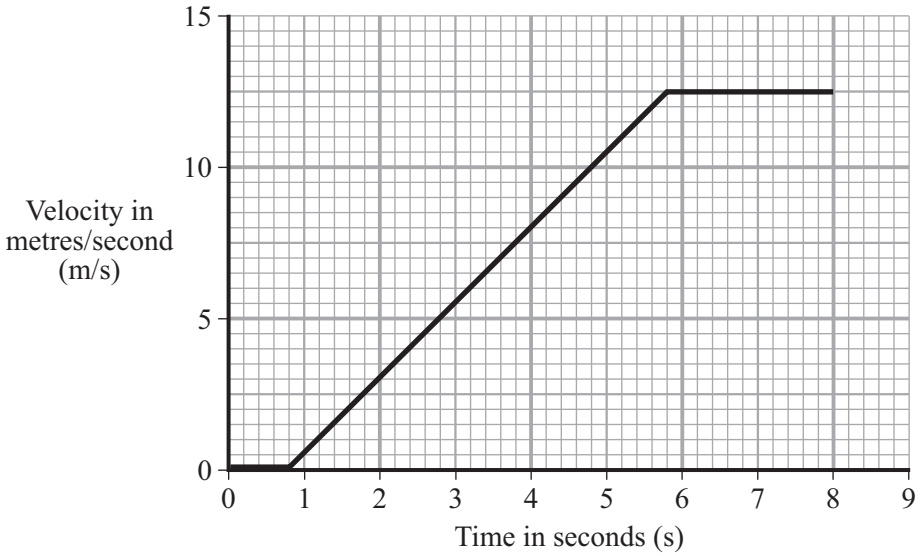

(a) Between the traffic lights changing to green and the car starting to move there is a time delay. This is called the reaction time. Write down **one** factor that could affect the driver's reaction time.

.....

(1 mark)

(b) Calculate the distance the car travels while accelerating. Show clearly how you work out your answer.

.....

.....

Distance = ...metres

(3 marks)

(c) Calculate the acceleration of the car. Show clearly how you work out your final answer and give the units.

.....

.....

.....

Acceleration = ...

(4 marks)

4.5.2 Work done and energy transfer

Question 02 · continued

1 /

MARGIN BLANK

(d) The mass of the car is 900 kg.

(i) Write down the equation that links acceleration, force and mass.

.....

(1 mark)

(ii) Calculate the force used to accelerate the car. Show clearly how you work out your final answer.

.....

.....

Force = ...newtons

(2 marks)

11

4.5.2 Work done and energy transfer

Question 03

June 2004 | 3451H | Original Q6 | Legacy

6 (a) A chair lift carries two skiers, Greg and Jill, to the top of a ski slope. Greg weighs 700 N and Jill weighs 500 N.

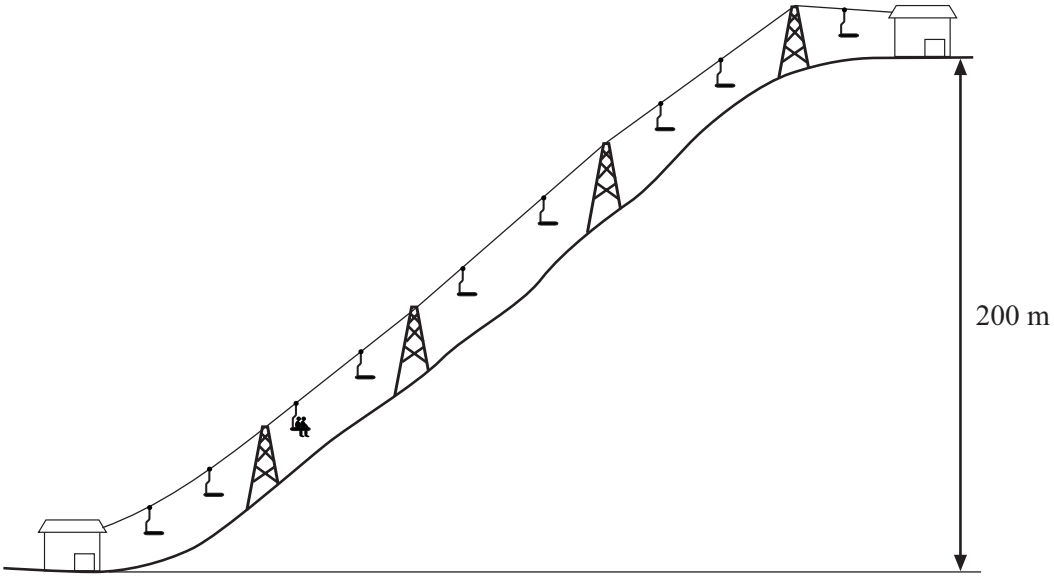

(i) Write down the equation that links distance moved, force applied and work done.

.....

(1 mark)

(ii) Calculate the work done to lift Greg and Jill through a vertical height of 200 m.
Show clearly how you work out your answer and give the unit.

.....

.....

.....

work done =.....

(3 marks)

4.5.2 Work done and energy transfer

Question 03 · continued

MARGIN BLANK

(b) The chair takes 5 minutes to move from the bottom to the top of the ski slope.

Use the following equation to calculate the power required to lift Greg and Jill to the top of the ski slope. Show clearly how you work out your answer.

$$\text{power} = \frac{\text{work done}}{\text{time taken}}$$

.....

.....

power = ...watts

(2 marks)

(c) The chair lift is driven by an electric motor.

(i) Why would the power output of the electric motor need to be larger than your answer to part (b)?

.....

.....

(1 mark)

(ii) Complete the following sentence.

When the ski lift is working ..... energy supplied to the motor is usefully transferred as gravitational ..... energy. *(1 mark)*

8

4.5.2 Work done and energy transfer

Question 04

June 2004 | 3462H3 | Original Q6 | Legacy

6 (a) A chair lift carries two skiers, Greg and Jill, to the top of a ski slope. Greg weighs 700 N and Jill weighs 500 N.

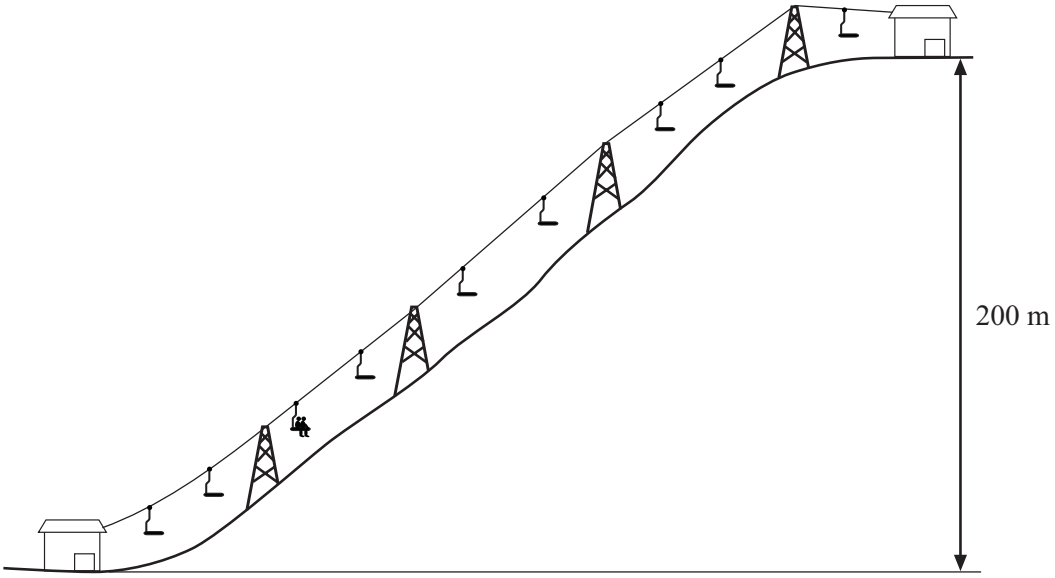

(i) Write down the equation that links distance moved, force applied and work done.

.....

(1 mark)

(ii) Calculate the work done to lift Greg and Jill through a vertical height of 200 m.
Show clearly how you work out your answer and give the unit.

.....

.....

.....

work done =.....

(3 marks)

4.5.2 Work done and energy transfer

Question 04 · continued

MARGIN BLANK

(b) The chair takes 5 minutes to move from the bottom to the top of the ski slope.

Use the following equation to calculate the power required to lift Greg and Jill to the top of the ski slope. Show clearly how you work out your answer.

$$\text{power} = \frac{\text{work done}}{\text{time taken}}$$

.....

.....

power = ...watts

(2 marks)

(c) The chair lift is driven by an electric motor.

(i) Why would the power output of the electric motor need to be larger than your answer to part (b)?

.....

.....

(1 mark)

(ii) Complete the following sentence.

When the ski lift is working ..... energy supplied to the motor is usefully transferred as gravitational ..... energy. *(1 mark)*

8

4.5.2 Work done and energy transfer

Question 05

June 2006 | 3451 | Original Q4 | Legacy

4 (a) The table shows how the stopping distance of a car, in metres (m), depends on the speed of the car, in miles per hour (mph).

Speed (mph)	20	30	40	50	60	70
Stopping distance (m)	12	23	36	53	73	96

(i) Draw a graph of stopping distance against speed.

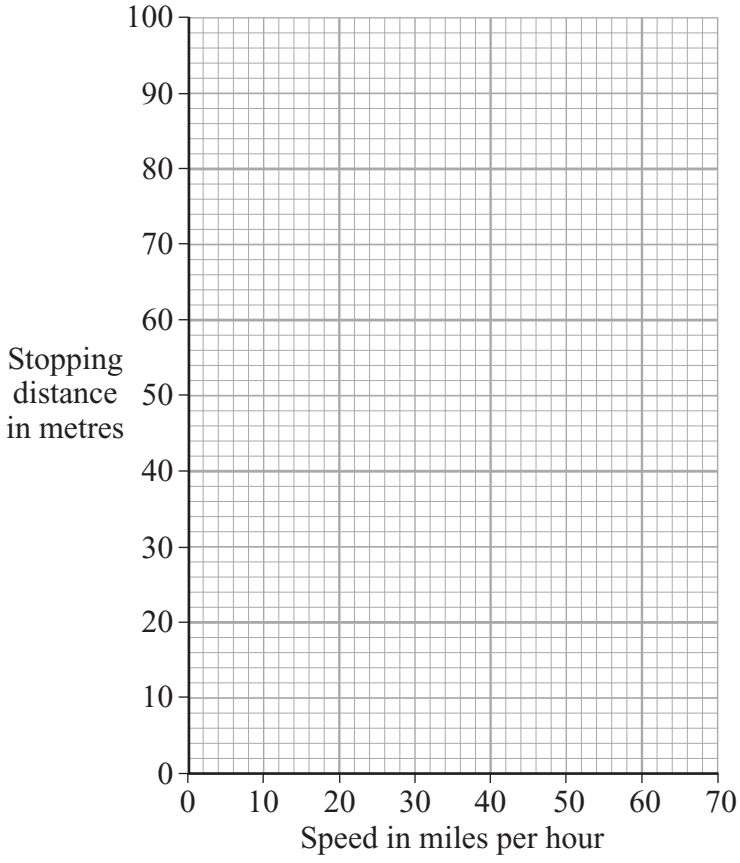

(3 marks)

(ii) The speed limit outside a school is 20 mph.

Use the graph to estimate **how much further** a car will travel before it stops when driven at 25 mph instead of 20 mph.

Show clearly how you work out your answer.

.....

.....

(2 marks)

Question 4 continues on the next page

Question 05 · continued

BLANK

(b) A child ran out in front of a car causing the driver to make an emergency stop. The graph shows how the speed of the car changed from the moment the driver saw the child.

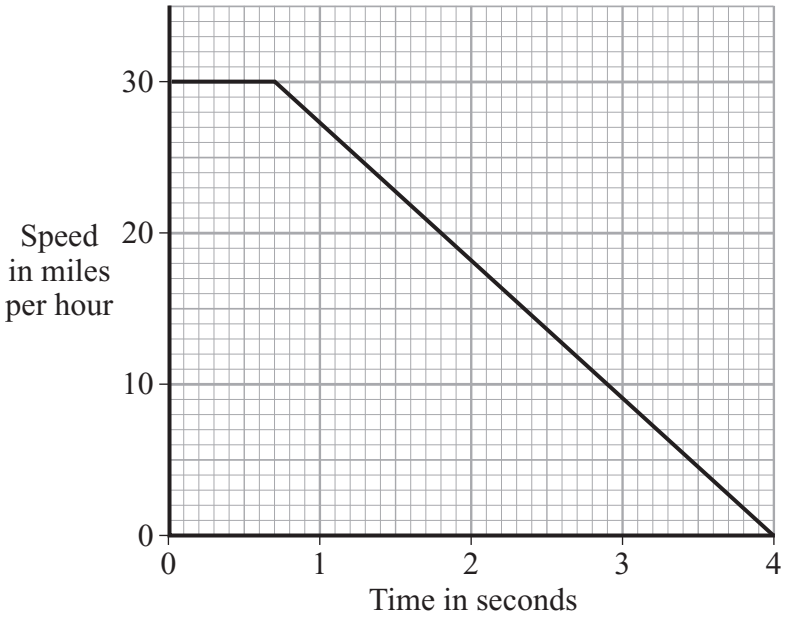

(i) What was the driver's reaction time?

.....

(1 mark)

(ii) Describe the motion of the car during the first 0.5 seconds.

.....

(1 mark)

(iii) How long did it take the car to stop once the brakes were applied?

.....

(1 mark)

(iv) The drug cannabis makes the reactions of a person slower.

Explain how the stopping distance of the car would change if the driver had been smoking cannabis.

.....

.....

.....

.....

(2 marks)

Question 05 · continued

BLANK

(c) The diagram shows how far a dummy in a car crash test moves before it is stopped by the seat belt. The graph shows the force exerted by the seat belt on the dummy during the crash.

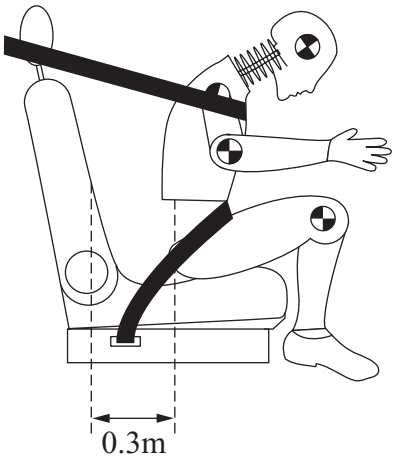

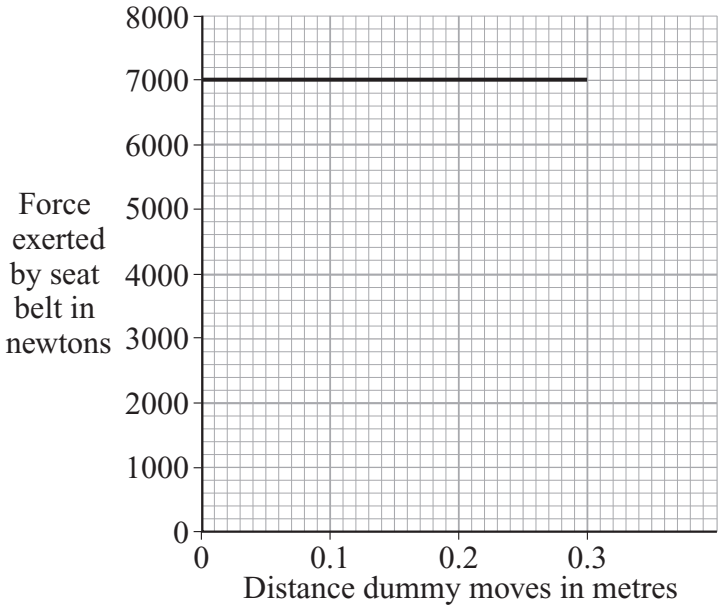

(i) Write down the equation that links distance moved, force applied and work done.

.....

(1 mark)

(ii) Calculate the work done to stop the dummy.

Show clearly how you work out your answer.

.....

.....

.....

Work done = ... joules

(2 marks)

(iii) How much energy is transferred from the dummy during the crash?

.....

(1 mark)

14

4.5.2 Work done and energy transfer

Question 06

June 2006 | 3462 | Original Q4 | Legacy

4 (a) The table shows how the stopping distance of a car, in metres (m), depends on the speed of the car, in miles per hour (mph).

Speed (mph)	20	30	40	50	60	70
Stopping distance (m)	12	23	36	53	73	96

(i) Draw a graph of stopping distance against speed.

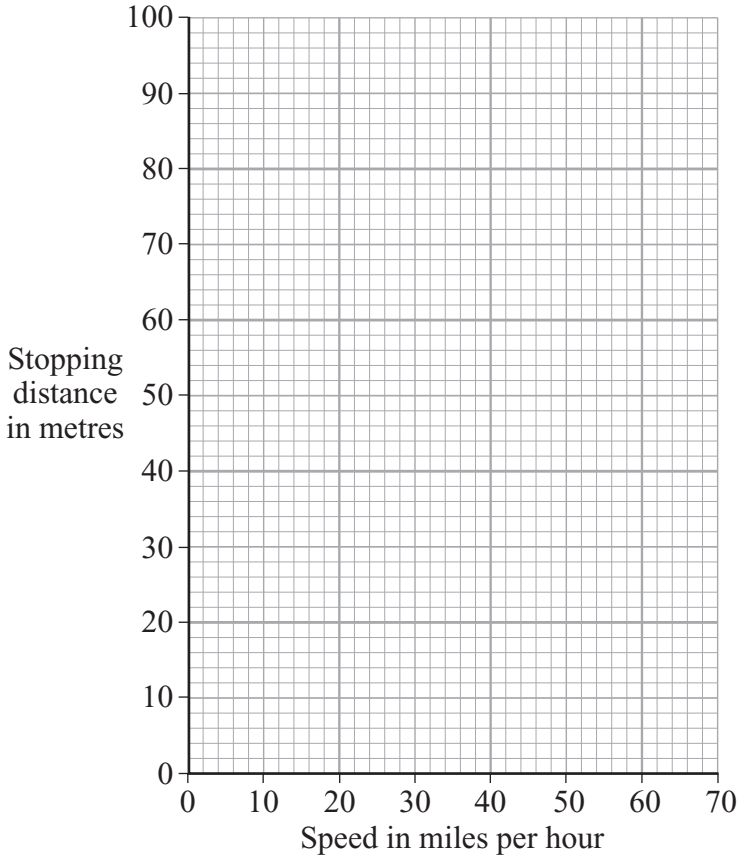

(3 marks)

(ii) The speed limit outside a school is 20 mph.

Use the graph to estimate **how much further** a car will travel before it stops when driven at 25 mph instead of 20 mph.

Show clearly how you work out your answer.

.....

.....

(2 marks)

Question 4 continues on the next page

Question 06 · continued

BLANK

(b) A child ran out in front of a car causing the driver to make an emergency stop. The graph shows how the speed of the car changed from the moment the driver saw the child.

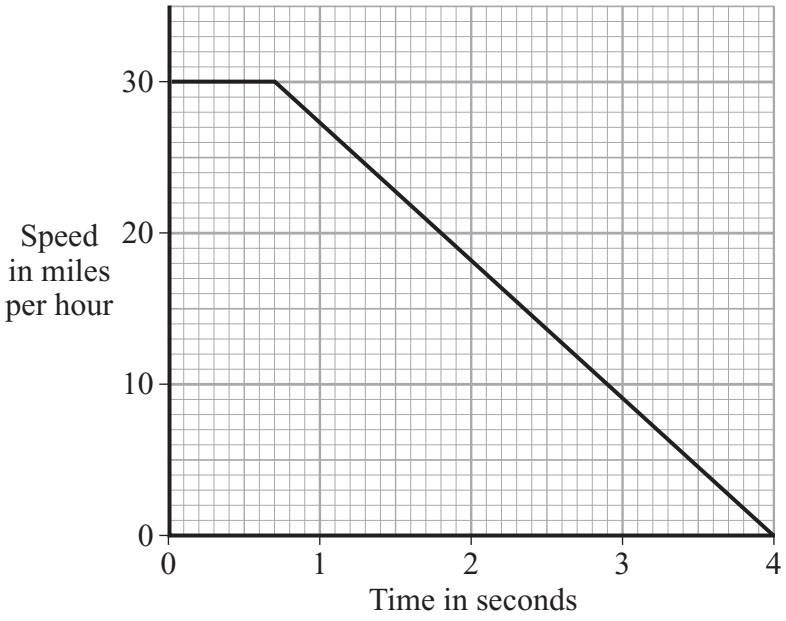

(i) What was the driver's reaction time?

.....

(1 mark)

(ii) Describe the motion of the car during the first 0.5 seconds.

.....

(1 mark)

(iii) How long did it take the car to stop once the brakes were applied?

.....

(1 mark)

(iv) The drug cannabis makes the reactions of a person slower.

Explain how the stopping distance of the car would change if the driver had been smoking cannabis.

.....

.....

.....

.....

(2 marks)

Question 06 · continued

(c) The diagram shows how far a dummy in a car crash test moves before it is stopped by the seat belt. The graph shows the force exerted by the seat belt on the dummy during the crash.

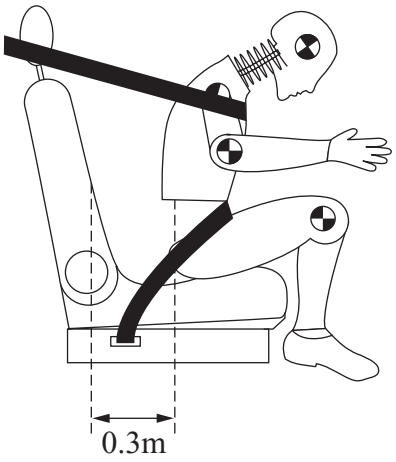

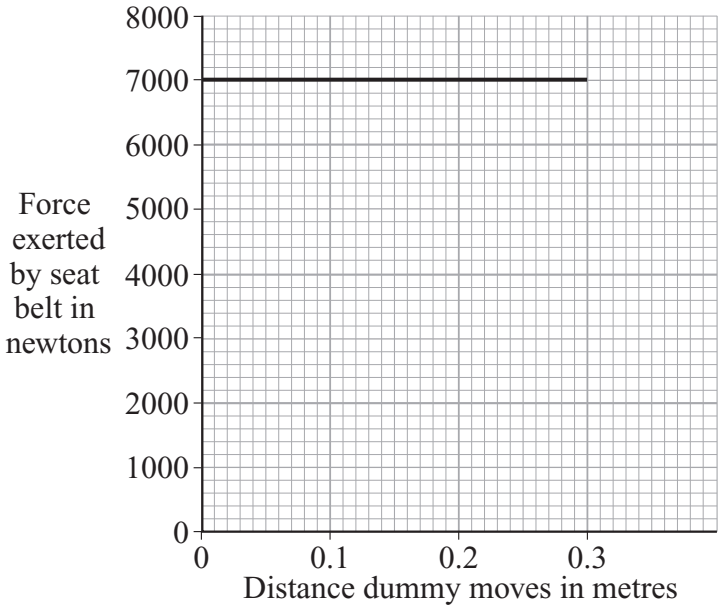

(i) Write down the equation that links distance moved, force applied and work done.

.....

(1 mark)

(ii) Calculate the work done to stop the dummy.

Show clearly how you work out your answer.

.....

.....

.....

Work done = ... joules

(2 marks)

(iii) How much energy is transferred from the dummy during the crash?

.....

(1 mark)

14

4.5.2 Work done and energy transfer

Question 07

January 2008 | PHY3H | Original Q1 | Legacy

1 A spanner gives a turning effect to undo a nut.

(a) Complete the sentence.

The turning effect of a force is called the ..... of the force.
(1 mark)

(b) The diagram shows a spanner being used.

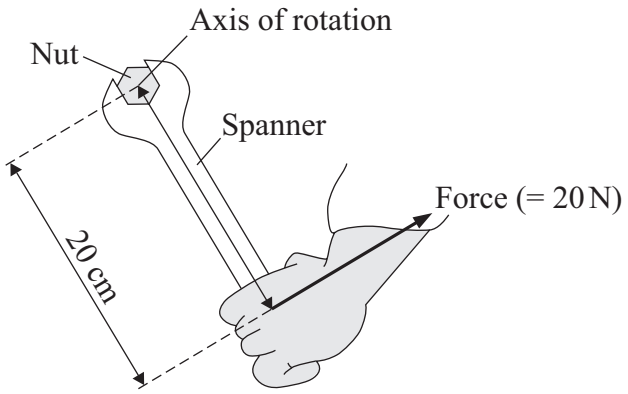

Use the equation in the box to calculate the spanner's turning effect in newton metres.

turning effect = force × perpendicular distance from the line of action of the force to the axis of rotation

Show clearly how you work out your answer.

.....

.....

Turning effect = ... Nm
(2 marks)

(c) Give **two** ways in which you can increase the spanner's turning effect.

1 .....

2 .....
(2 marks)

5

4.5.2 Work done and energy transfer

Question 08

June 2008 | PHY3H | Original Q3 | Legacy

3 The diagram shows a crane which is loading containers onto a ship.

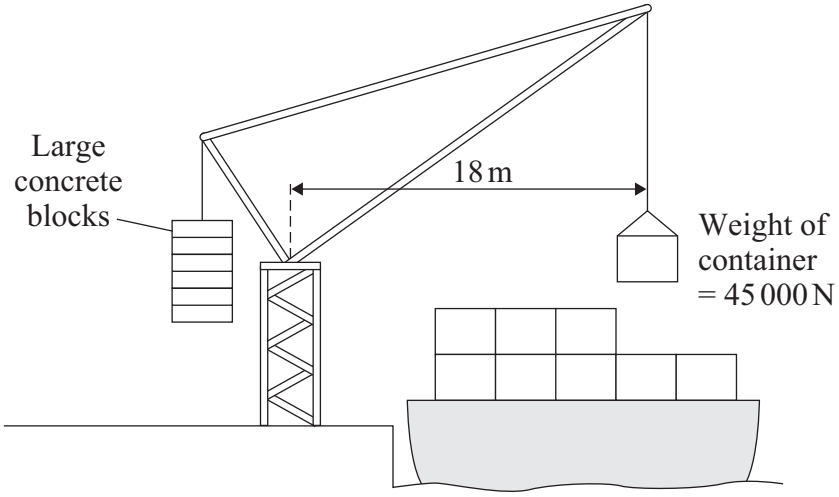

3 (a) Use the equation in the box to calculate the moment of the container which is being loaded.

moment = force × perpendicular distance from the line of action of the force to the axis of rotation

Show clearly how you work out your answer and give the unit.

.....

.....

Moment of the container = ...

(3 marks)

3 (b) Suggest and explain the purpose of the large concrete blocks.

.....

.....

.....

.....

.....

(3 marks)

6

4.5.2 Work done and energy transfer

Question 09

June 2010 | PHY2H | Original Q1 | Legacy

1 (a) The diagram shows a cable car used to take skiers to the top of a mountain.

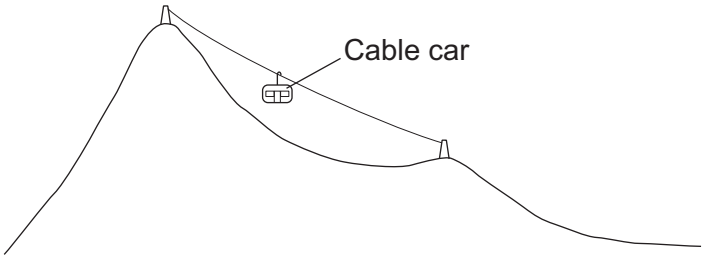

1 (a) (i) The total mass of the cable car and skiers is 7500 kg.

Use the equation in the box to calculate the weight of the cable car and skiers.

weight = mass × gravitational field strength

gravitational field strength = 10 N/kg

Show clearly how you work out your answer and give the unit.

.....

.....

Weight = ...

(3 marks)

4.5.2 Work done and energy transfer

Question 09 · continued

1 (a) (ii) The cable car moves at a constant speed. It lifts skiers through a vertical height of 800 metres in 7 minutes.

Use the following equation to calculate the work done to lift the cable car and skiers.

work done = force applied × distance moved in the direction of force

Show clearly how you work out your answer.

.....

.....

Work done = ... J

(2 marks)

1 (b) The diagram shows a skier who is accelerating down a steep ski slope.



1 (b) (i) Draw an arrow on the diagram to show the direction of the resultant force acting on the skier.

(1 mark)

1 (b) (ii) How and why does the kinetic energy of the skier change?

.....

.....

.....

.....

(2 marks)

Question 1 continues on the next page

4.5.2 Work done and energy transfer

Question 09 · continued

1 (c) Last year, 18 000 skiers suffered a head injury. It is thought that nearly 8000 of these injuries could have been avoided if the skier had been wearing a helmet. However, at present, there are no laws to make skiers wear helmets.

Suggest why skiers should be made aware of the benefits of wearing a helmet.

.....

.....

(1 mark)

9

4.5.2 Work done and energy transfer

Question 10

January 2011 | PHY3H | Original Q5 | Legacy

5 The diagram shows a fork-lift truck with a load of 2.4 kN. The clockwise moment caused by this load is 2880 Nm.

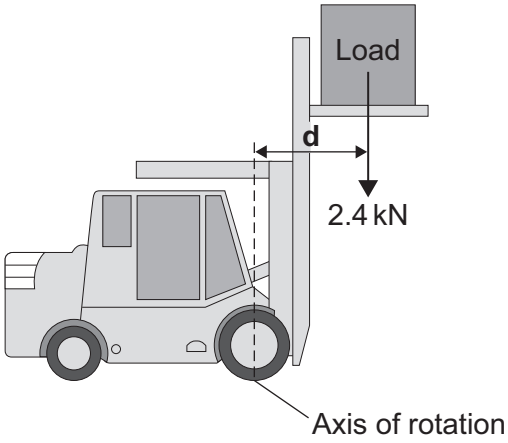

5 (a) Use the equation in the box to calculate the distance **d**.

moment	=	force	×	perpendicular distance from the line of action of the force to the axis of rotation

Show clearly how you work out the answer and give the unit.

.....

.....

.....

Distance **d** = ...

(3 marks)

4.5.2 Work done and energy transfer

Question 10 · continued

5 (b) This warning notice is in the driver's cab.

Warning

Maximum load 10.0 kN

This load must not be exceeded

Explain in terms of moments why the maximum load must not be exceeded.

.....

.....

.....

.....

.....

.....

(2 marks)

5

4.5.2 Work done and energy transfer

Question 11

June 2011 | PHY2H | Original Q2 | Legacy

2 (a) The diagram shows a builder using a plank to help load rubble into a skip.

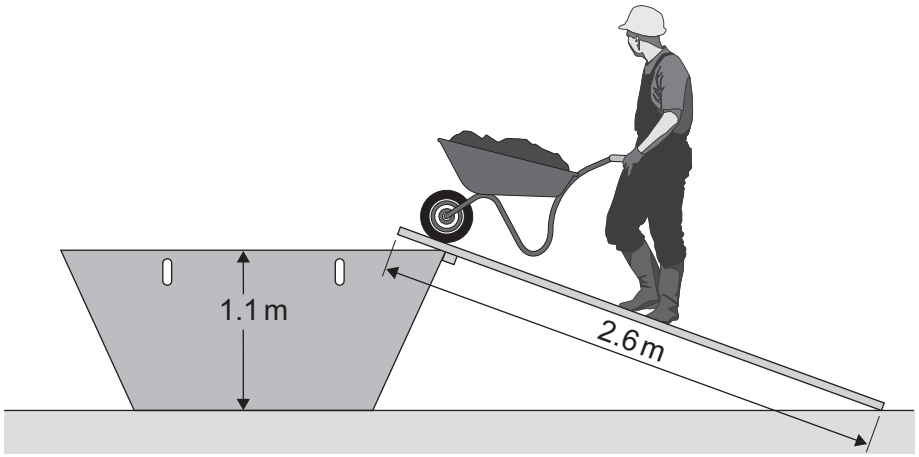

The builder uses a force of 220 N to push the wheelbarrow up the plank.

Use information from the diagram and the equation in the box to calculate the work done to push the wheelbarrow up the plank to the skip.

work done = force applied × distance moved in the direction of force

Show clearly how you work out your answer.

.....

.....

Work done = ... J

(2 marks)

2 (b) A student investigated how the force needed to pull a brick up a slope, at a steady speed, depends on the angle of the slope.
The apparatus used by the student is shown in the diagram.

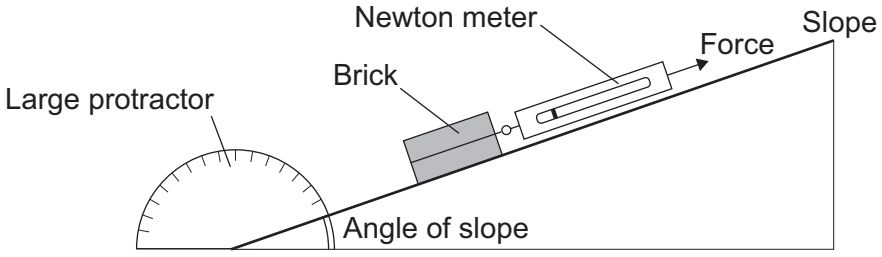

The student used the results from the investigation to plot the points for a graph of force used against the angle of the slope.

4.5.2 Work done and energy transfer

Question 11 · continued

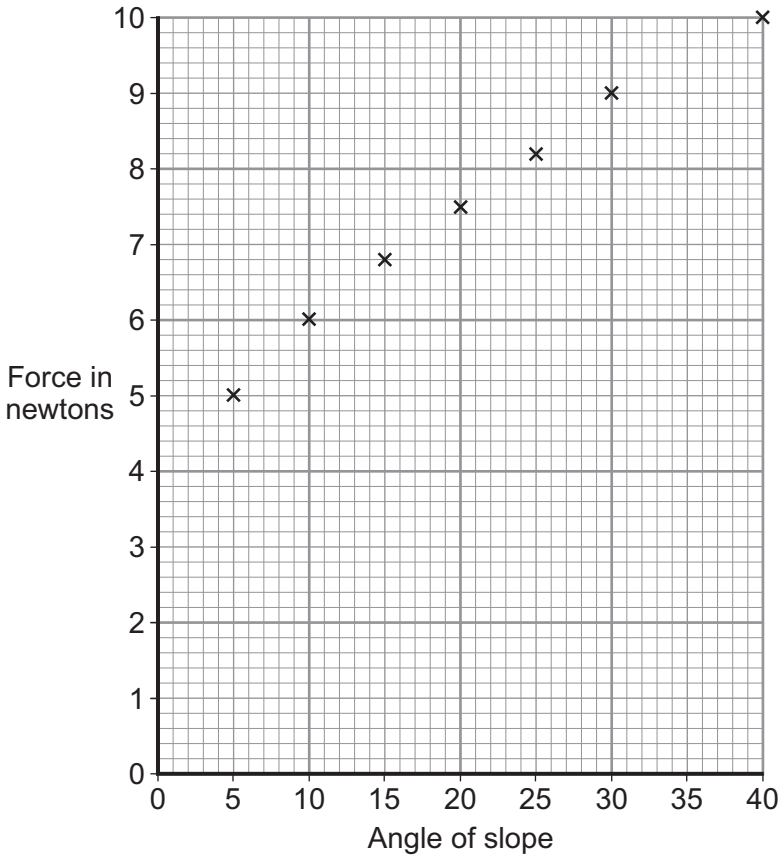

2 (b) (i) Draw a line of best fit for these points. *(1 mark)*

2 (b) (ii) How does the force used to pull the brick up the slope change as the angle of the slope increases?

.....

.....

(1 mark)

2 (b) (iii) Consider the results from this experiment.
Should the student recommend that the builder use a long plank or a short plank to help load the skip?

Draw a ring around your answer.

long plank **short plank**

Explain the reason for your answer.

.....

.....

.....

.....

(2 marks)

6

4.5.2 Work done and energy transfer

Question 12

June 2011 | PHY3H | Original Q2 | Legacy

2 (a) A student investigates the moment of a force.

2 (a) (i) What does the word *moment* mean in this sentence?

.....

.....

(1 mark)

2 (a) (ii) The diagram shows how she sets up her apparatus.

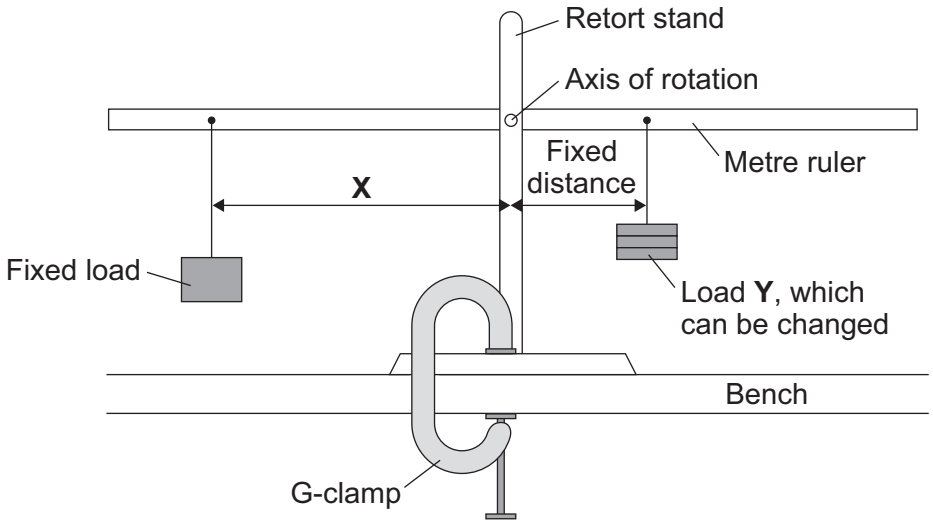

Suggest the purpose of the G-clamp.

.....

.....

(1 mark)

4.5.2 Work done and energy transfer

Question 12 · continued

2 (a) (iii) A horizontal rod fits into a hole at the centre of the metre ruler. This is the axis of rotation. The student changes the load **Y** and adjusts the distance **X** until the metre ruler is horizontal. She takes six pairs of measurements which are shown in the table.

Load Y in newtons	Distance X in centimetres
1	7
2	14
3	21
4	28
5	35
6	42

Explain fully how distance **X** varies with load **Y**.

.....

.....

.....

.....

.....

(2 marks)

2 (a) (iv) The weight of the ruler can be ignored in this experiment.

Which statement gives the reason why?

Put a tick (✓) in the box next to your answer.

The weight of the ruler is so small it is negligible. ☐

The centre of mass of the ruler is at the axis of rotation. ☐

The ruler is a symmetrical object. ☐

(1 mark)

Question 2 continues on the next page

4.5.2 Work done and energy transfer

Question 12 · continued

2 (b) In the summer, a town council fits hanging baskets to some of its lamp posts.

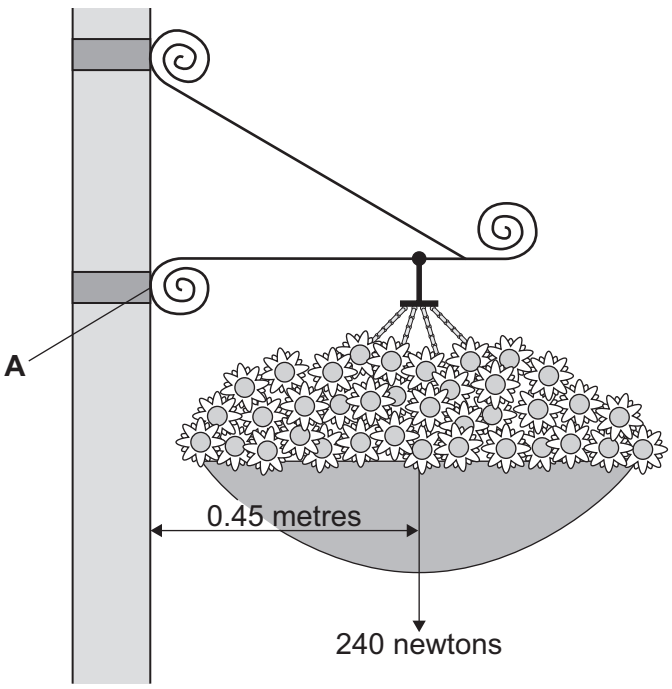

Use the information in the diagram and the equation in the box to calculate the moment produced by the weight of the hanging basket about an axis through point **A**.

moment = force × perpendicular distance from the line of action of the force to the axis of rotation

Show clearly how you work out your answer **and** give the unit.

.....

.....

.....

.....

Moment =.....

(3 marks)

8

4.5.2 Work done and energy transfer

Question 13

January 2013 | PH2HP | Original Q1 | Legacy

1 A car has an oil leak. Every 5 seconds an oil drop falls from the bottom of the car onto the road.

1 (a) What force causes the oil drop to fall towards the road?

.....

(1 mark)

1 (b) The diagram shows the spacing of the oil drops left on the road during part of a journey from A to B.



Describe the motion of the car as it moves from **A** to **B**.

.....

Explain the reason for your answer.

.....

.....

.....

.....

(3 marks)

1 (c) When the brakes are applied, a braking force slows down and stops the car.

1 (c) (i) The size of the braking force affects the braking distance of the car.

State **one** other factor that affects the braking distance of the car.

.....

(1 mark)

4.5.2 Work done and energy transfer

Question 13 · continued

1 (c) (ii) A braking force of 3 kN is used to slow down and stop the car in a distance of 25 m.

Calculate the work done by the brakes to stop the car and give the unit.

Use the correct equation from the Physics Equations Sheet.

.....

.....

.....

Work done =.....

(3 marks)

8

Turn over for the next question

4.5.2 Work done and energy transfer

Question 14

June 2013 | PH2HP | Original Q4 | Legacy

4 (a) The stopping distance of a vehicle is made up of two parts, the thinking distance and the braking distance.

4 (a) (i) What is meant by *thinking distance*?

.....

.....

(1 mark)

4 (a) (ii) State **two** factors that affect thinking distance.

1 .....

.....

2 .....

.....

(2 marks)

4 (b) A car is travelling at a speed of 20 m/s when the driver applies the brakes. The car decelerates at a constant rate and stops.

4 (b) (i) The mass of the car and driver is 1600 kg.

Calculate the kinetic energy of the car and driver before the brakes are applied.

Use the correct equation from the Physics Equations Sheet.

.....

.....

.....

Kinetic energy = ... J

(2 marks)

4 (b) (ii) How much work is done by the braking force to stop the car and driver?

Work done = ... J

(1 mark)

4.5.2 Work done and energy transfer

Question 14 · continued

4 (b) (iii) The braking force used to stop the car and driver was 8000 N.

Calculate the braking distance of the car.

Use the correct equation from the Physics Equations Sheet.

.....

.....

.....

.....

Braking distance = ... m

(2 marks)

4 (b) (iv) The braking distance of a car depends on the speed of the car and the braking force applied.

State **one** other factor that affects braking distance.

.....

.....

(1 mark)

4 (b) (v) Applying the brakes of the car causes the temperature of the brakes to increase.

Explain why.

.....

.....

.....

.....

(2 marks)

Question 4 continues on the next page

4.5.2 Work done and energy transfer

Question 14 · continued

4 (c) Hybrid cars have an electric engine and a petrol engine. This type of car is often fitted with a regenerative braking system. A regenerative braking system not only slows a car down but at the same time causes a generator to charge the car's battery.

State and explain the benefit of a hybrid car being fitted with a regenerative braking system.

.....

.....

.....

.....

.....

.....

(3 marks)

14

4.5.2 Work done and energy transfer

Question 15

June 2014 | PH1HP | Original Q7 | Legacy

7 A student used the apparatus in **Figure 7** to obtain the data needed to calculate the specific heat capacity of copper.

Figure 7

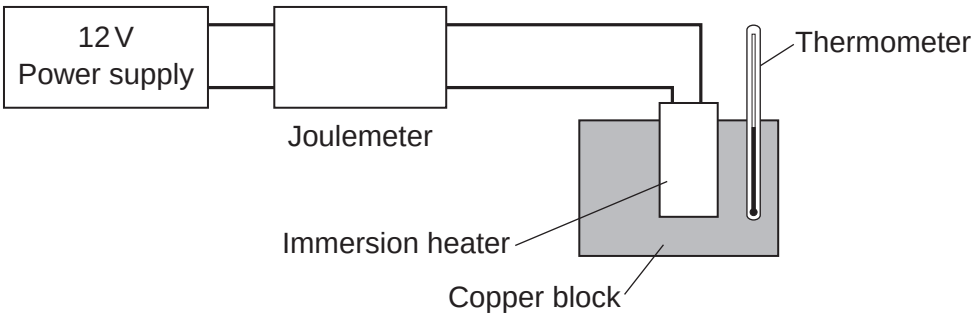

The initial temperature of the copper block was measured.

The power supply was switched on.

The energy transferred by the heater to the block was measured using the joulemeter.

The temperature of the block was recorded every minute.

The temperature increase was calculated.

Figure 8 shows the student's results.

Figure 8

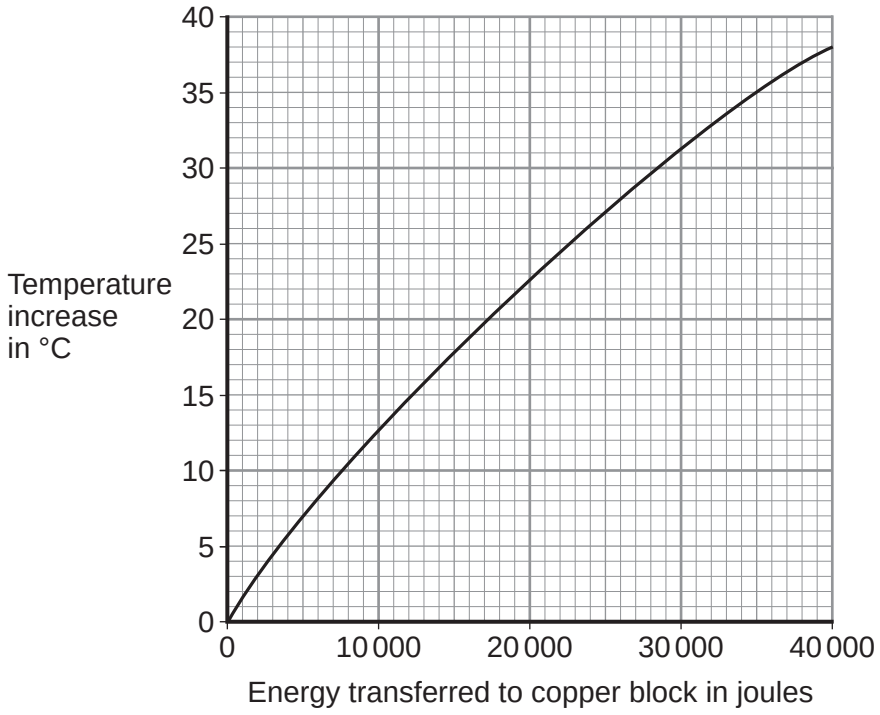

4.5.2 Work done and energy transfer

Question 15 · continued

7 (a) Energy is transferred through the copper block.

What is the name of the process by which the energy is transferred?

Tick (✓) **one** box.

[1 mark]

Conduction ☐

Convection ☐

Radiation ☐

7 (b) Use **Figure 8** to determine how much energy was needed to increase the temperature of the copper block by 35 °C.

[1 mark]

..... joules

7 (c) The copper block has a mass of 2 kg.

Use your answer to part **(b)** to calculate the value given by this experiment for the specific heat capacity of copper. Give the unit.

Use the correct equation from the Physics Equations Sheet.

[3 marks]

.....

.....

.....

.....

Specific heat capacity = ...

7 (d) This experiment does **not** give the correct value for the specific heat of copper.

Suggest **one** reason why.

[1 mark]

.....

.....

6

4.5.2 Work done and energy transfer

Question 16

June 2014 | PH2HP | Original Q3 | Legacy

3 (a) **Figure 2** shows the horizontal forces acting on a moving bicycle and cyclist.

Figure 2

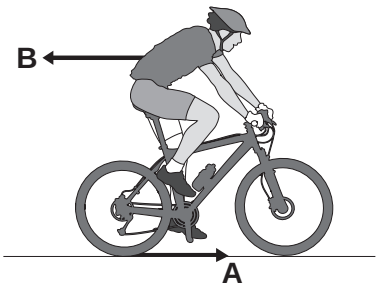

3 (a) (i) What causes force **A**?

Draw a ring around the correct answer.

[1 mark]

friction **gravity** **weight**

3 (a) (ii) What causes force **B**?

[1 mark]

.....

3 (a) (iii) **In this question you will be assessed on using good English, organising information clearly and using specialist terms where appropriate.**

Figure 3 shows how the velocity of the cyclist changes during the first part of a journey along a straight and level road. During this part of the journey the force applied by the cyclist to the bicycle pedals is constant.

Figure 3

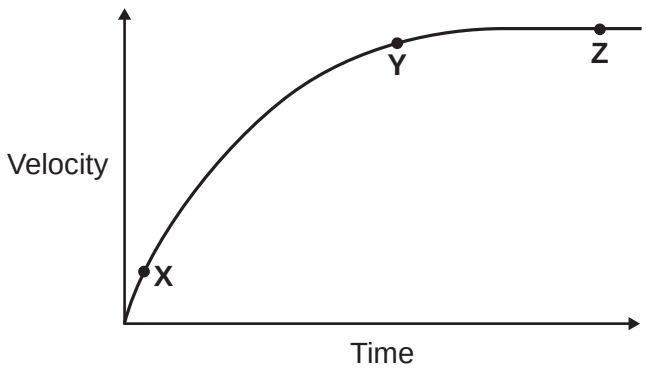

4.5.2 Work done and energy transfer

Question 16 · continued

Describe how **and** explain, in terms of the forces **A** and **B**, why the velocity of the cyclist changes:

- between the points **X** and **Y**
- and between the points **Y** and **Z**, marked on the graph in **Figure 3**.

[6 marks]

.....

.....

.....

.....

.....

.....

.....

.....

.....

.....

.....

.....

Extra space .....

.....

.....

.....

.....

.....

.....

.....

.....

.....

.....

.....

4.5.2 Work done and energy transfer

Question 16 · continued

3 (b) (i) The cyclist used the brakes to slow down and stop the bicycle.

A constant braking force of 140 N stopped the bicycle in a distance of 24 m.

Calculate the work done by the braking force to stop the bicycle. Give the unit.

Use the correct equation from the Physics Equations Sheet.

[3 marks]

.....

.....

.....

Work done = ...

3 (b) (ii) Complete the following sentences.

[2 marks]

When the brakes are used, the bicycle slows down. The kinetic energy of the bicycle ..... .

At the same time, the ..... of the brakes increases.

13

4.5.2 Work done and energy transfer

Question 17

June 2017 | PH2HP | Original Q4 | Legacy

4 A lorry driver sees the traffic lights at a road junction change to red.
The driver applies the brakes to stop the lorry.

The stopping distance is the thinking distance plus the braking distance.

4 (a) (i) Which statement describes the thinking distance?

[1 mark]

Tick (✓) **one** box.

The time it takes for the lorry to stop after the brakes are applied. ☐

The time it takes the driver to react and apply the brakes. ☐

The distance the lorry travels once the brakes are applied. ☐

The distance the lorry travels during the driver's reaction time. ☐

4 (a) (ii) How does thinking distance depend on the speed of the lorry?

[1 mark]

_____

_____

4 (b) **Figure 3** shows how the velocity of the lorry changes from just after the driver sees the traffic lights change to red.

Figure 3

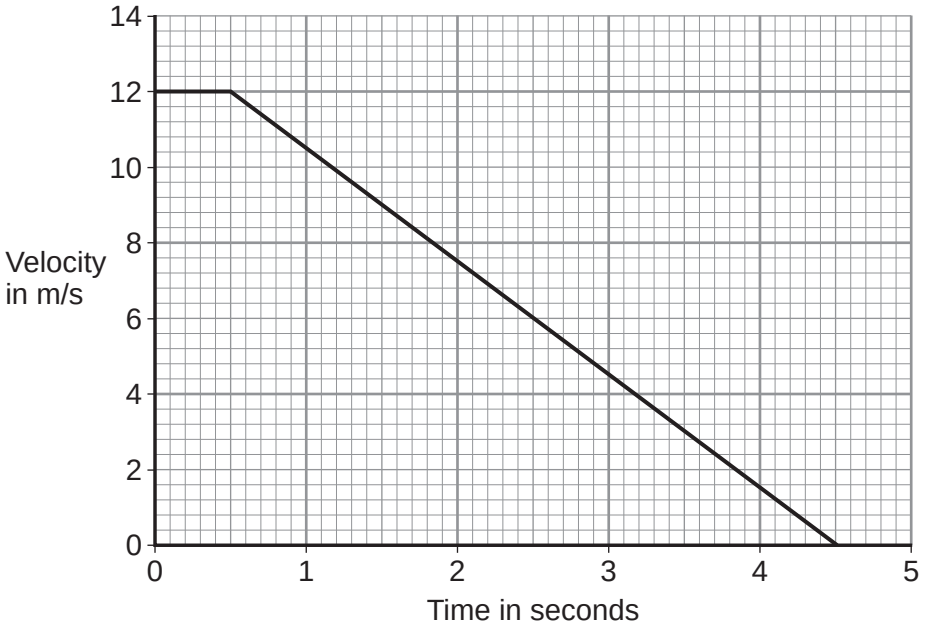

4.5.2 Work done and energy transfer

Question 17 · continued

4 (b) (i) Calculate the braking distance of the lorry.

Show how you used **Figure 3** to obtain your answer.

[2 marks]

Distance = _____ m

4 (b) (ii) The work done to stop the lorry is 360 kJ

Calculate the braking force used to stop the lorry.

Use the correct equation from the Physics Equations Sheet.

[2 marks]

Braking force = _____ N

Question 4 continues on the next page

Question 17 · continued

4 (c) A student investigated how braking distance depends on braking force. The student used the apparatus shown in **Figure 4**.

Figure 4

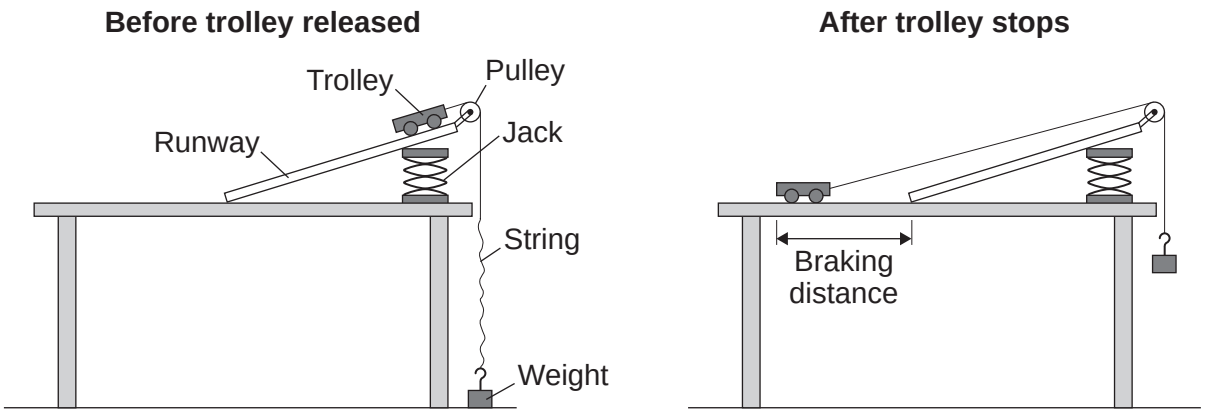

The student released the trolley from the top of the runway. When the trolley reached the bottom of the runway the string became taut and the trolley started to lift a weight from the floor. The weight being lifted was equal to the braking force on the trolley.

The student changed the weight being lifted and measured the new braking distance.

4 (c) (i) State **one** control variable in this investigation.

[1 mark]

4 (c) (ii) **Figure 4** shows the braking distance measured by the student.

What else could the student have measured that would also have given the braking distance?

[1 mark]

Question 17 · continued

4 (c) (iii) Measuring each braking distance at least twice would improve the investigation. Suggest why.

[2 marks]

4 (c) (iv) The results of the investigation are plotted as a graph in **Figure 5**.

Figure 5

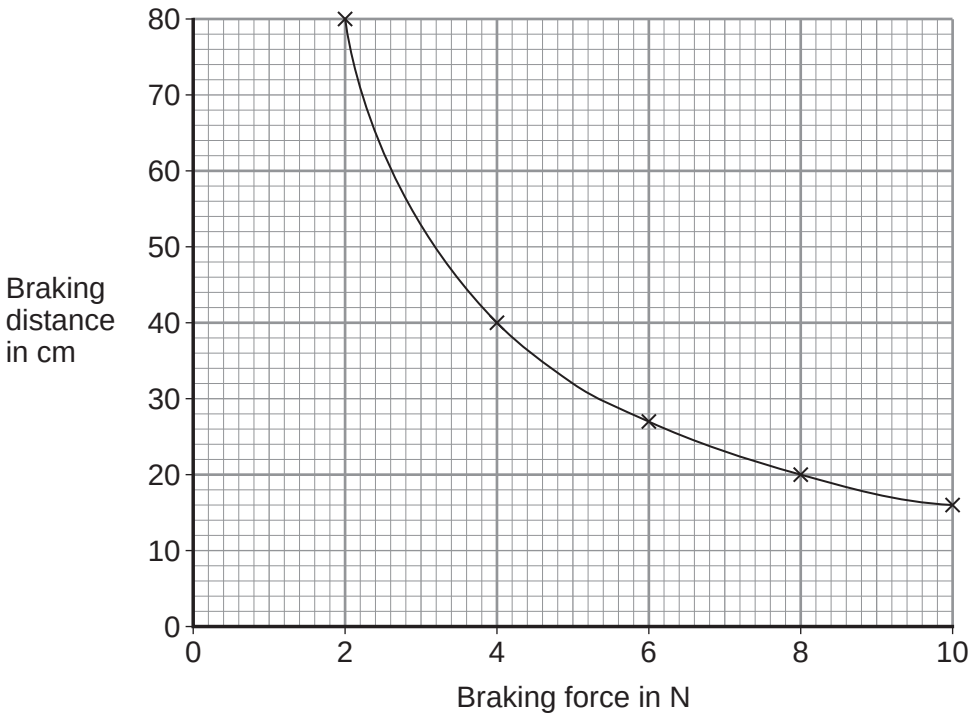

What conclusions should be made from this investigation about the relationship between braking distance and braking force?

Use data from **Figure 5** to justify your conclusion.

[2 marks]

12

4.5.2 Work done and energy transfer

Question 18

June 2018 | 8463/1H | Original Q4

0 4 **Figure 5** shows a cyclist riding along a straight, level road at a constant speed.

Figure 5



0 4 . 1 Complete the sentences.

[2 marks]

As the cyclist rides along the road, the _____ energy store in the cyclist's body decreases.

The speed of the cyclist is constant when the work done by the cyclist is _____ the work done against air resistance.

Question 4 continues on the next page

4.5.2 Work done and energy transfer

Question 18 · continued

Figure 6 shows how the speed changes as the power output of the cyclist changes.

Figure 6

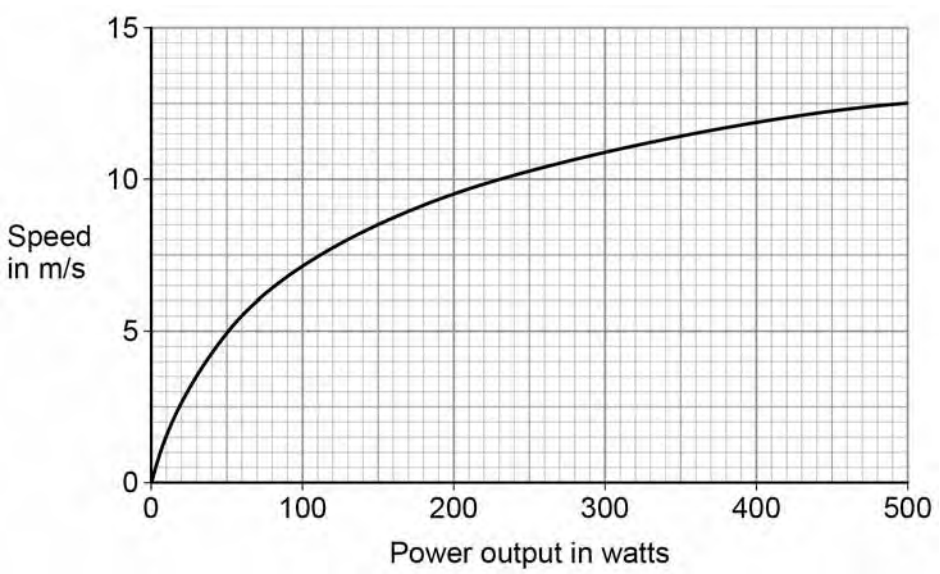

0 4 . 2 Write down the equation that links power, time and work done.

[1 mark]

0 4 . 3 Calculate the work done by the cyclist when his power output is 200 W for 1800 seconds.

[3 marks]

Work done = _____ J

4.5.2 Work done and energy transfer

Question 18 · continued

0 4 . 4 Calculate the percentage increase in speed of the cyclist when the power output changes from 200 W to 300 W.

[2 marks]

Percentage increase in speed = _____

0 4 . 5 The maximum speed this cyclist can travel on a level road is 14 m/s.

How does cycling uphill affect the maximum speed of this cyclist?

Explain your answer.

[3 marks]

11

4.5.2 Work done and energy transfer

Question 19

June 2019 | 8463/2H | Original Q3

0 3 . 1 The driver of a vehicle sees a hazard on the road.

The driver uses the brakes to stop the vehicle.

Explain the factors that affect the distance needed to stop a vehicle in an emergency.

[6 marks]

4.5.2 Work done and energy transfer

Question 19 · continued

0 3 . 2 Write down the equation which links distance, force and work done.

[1 mark]

0 3 . 3 The work done by the braking force to stop a vehicle was 900 000 J

The braking force was 60 000 N

Calculate the braking distance of the vehicle.

[3 marks]

Braking distance = _____ m

0 3 . 4 The greater the braking force, the greater the deceleration of a vehicle.

Explain the possible dangers caused by a vehicle having a large deceleration when it is braking.

[2 marks]

12

4.5.2 Work done and energy transfer

Question 20

November 2020 | 8463/2H | Original Q6

0 6 **Figure 8** shows a student playing with a remote-controlled car.

Figure 8

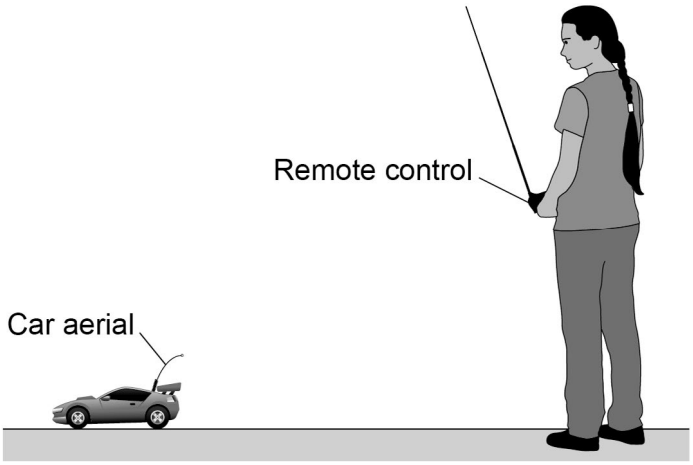

0 6 . 1 The remote control transmits radio waves to the car aerial.

The transmitted radio waves have a frequency of 320 MHz.

speed of radio waves = 3.0×10^8 m/s

Calculate the wavelength of the radio waves.

Give the unit.

[5 marks]

Wavelength = _____ Unit _____

4.5.2 Work done and energy transfer

Question 20 · continued

0 6 . 2 The car aerial is connected to an electrical circuit in the car.

Describe what happens in the electrical circuit when the car aerial absorbs radio waves.

[2 marks]

0 6 . 3 The car produces sound waves.

Give **two** ways in which radio waves are different to sound waves.

[2 marks]

1

2

Question 6 continues on the next page

4.5.2 Work done and energy transfer

Question 20 · continued

November 2020 | 8463/2H | Original Q6

Figure 9 shows the distance-time graph for the first 30 seconds of the car's motion.

Figure 9

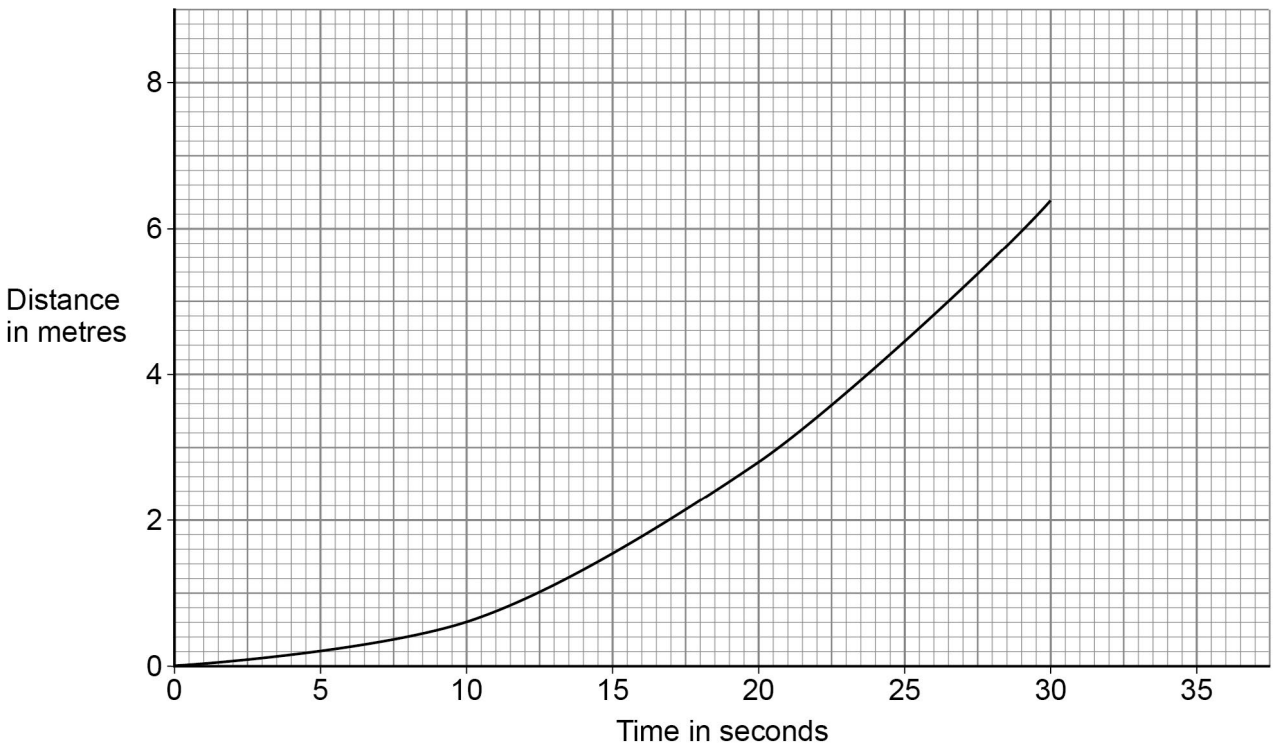

0 6 . 4 Describe the motion of the car during the first 30 seconds.

[1 mark]

0 6 . 5 Determine the speed of the car 20 seconds after it started to move.

[4 marks]

Speed = _____ m/s

Question 20 · continued

0 6 . 6 A different car accelerated from 0.12 m/s to 0.52 m/s.

The acceleration of the car was 0.040 m/s^2.

The work done to accelerate the car was 0.48 J.

Calculate the resultant force needed to accelerate the car.

[6 marks]

Resultant force = _____ N

0 6 . 7 Explain why the car has a maximum speed.

[4 marks]

24

4.5.2 Work done and energy transfer

Question 21

June 2022 | 8463/2HR | Original Q1

0 1 **Figure 1** shows an electric super-car.

Figure 1



0 1 . 1 The battery in an electric car needs to be recharged.

Suggest **two** factors that affect the distance an electric car can travel before the battery needs to be recharged.

[2 marks]

1 _____

2 _____

4.5.2 Work done and energy transfer

Question 21 · continued

Use the Physics Equations Sheet to answer questions **01.2** and **01.3**.

0 1 . 2 Write down the equation which links acceleration (a), change in velocity (Δv) and time taken (t).

[1 mark]

0 1 . 3 The maximum acceleration of the car is 20 m/s^2.

Calculate the time taken for the speed of the car to change from 0 m/s to 28 m/s at its maximum acceleration.

[3 marks]

Time taken = _____ s

Question 1 continues on the next page

4.5.2 Work done and energy transfer

Question 21 · continued

0 1 . 4 In a trial run, the car accelerates at 10 m/s^2 until it reaches its final velocity.

distance travelled by the car = 605 m

initial velocity of the car = 0 m/s

Calculate the final velocity of the car.

Use the Physics Equations Sheet.

[3 marks]

Final velocity = _____ m/s

4.5.2 Work done and energy transfer

Question 21 · continued

Use the Physics Equations Sheet to answer questions **01.5** and **01.6**.

0 1 . 5 Write down the equation which links distance (*s*), force (*F*) and work done (*W*).

[1 mark]

0 1 . 6 When travelling at its maximum speed the air resistance acting on the car is 4000 N.

Calculate the work done against air resistance when the car travels a distance of 7.5 km at its maximum speed.

[3 marks]

Work done = _____ J

13

4.5.2 Work done and energy transfer

Question 22

0 2 **Figure 5** shows a young child using a baby walker.

Figure 5



0 2 . 1 The child is standing still.

What is the resultant **vertical** force on the child?

Give a reason for your answer.

[2 marks]

Resultant vertical force = _____ N

Reason _____

_____

Question 22 · continued

Use the Physics Equations Sheet to answer questions **02.2** and **02.3**.

0 2 . 2 Write down the equation which links distance (*s*), force (*F*) and work done (*W*).

[1 mark]

0 2 . 3 The child pushed the baby walker 2.8 m across a horizontal floor.

The work done by the child was 35 J.

Calculate the horizontal force the child applied to the baby walker.

[3 marks]

Horizontal force = _____ N

0 2 . 4 The child pushed the baby walker from a carpet onto a hard floor.

The child applied the same horizontal force to the baby walker.

Explain why the speed of the baby walker increased.

[2 marks]

4.5.2 Work done and energy transfer

Question 22 · continued

There are some toy gears on the front of the baby walker.

Figure 6 shows the gears.

Figure 6

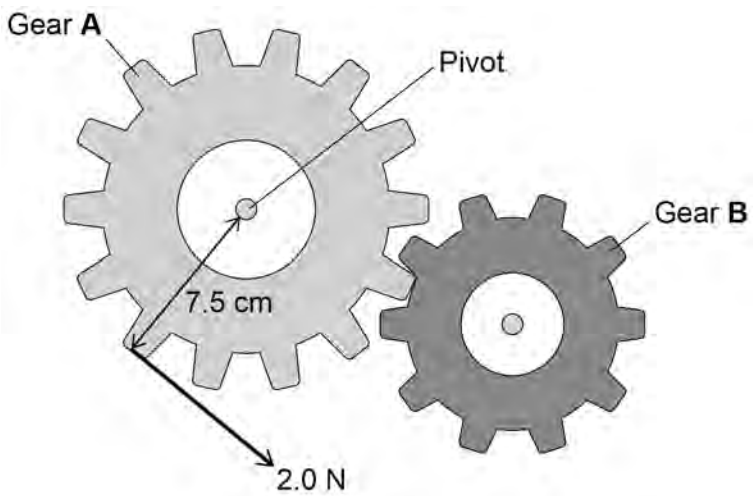

The child applies a force to gear **A**.

This causes a moment about the pivot, so gear **A** rotates.

4.5.2 Work done and energy transfer

Question 22 · continued

Use the Physics Equations Sheet to answer questions **02.5** and **02.6**.

0 2 . 5 Write down the equation which links distance (*d*), force (*F*) and moment of a force (*M*).

[1 mark]

0 2 . 6 The child applies a force of 2.0 N on gear **A**.

The perpendicular distance between the force and the pivot is 7.5 cm.

Calculate the moment of the force about the pivot.

[3 marks]

Moment of force = _____ N m

0 2 . 7 Explain what happens to gear **B** when the child applies the force to gear **A**.

[2 marks]

14