AQA GCSE Physics | 8463

SPECIFICATION POINT 4.5.1.3

Gravity

Past-paper questions

Tier	**Higher**
Question groups	**31**
Available paper years	**2003–2025**

Using this booklet

1. Answer the questions in order and show your working.
2. Original question numbers and marks are retained.
3. Print at actual size (100%) for measuring questions.
4. Use the companion answer booklet to check your work.

Name: _____ **Date:** _____

Whole questions are retained for context, so some parts assess other specification points. Current and legacy sources are labelled. Continue on extra paper if needed.

4.5.1.3 Gravity

Question 01

June 2003 | 3451H | Original Q4 | Legacy

4 (a) The table gives information about some planets.

Name of planet	Gravitational field strength in N/kg	Diameter of planet in thousands of km	Time for 1 orbit around the sun in years
Mercury	4	4.9	0.2
Venus	9	12.0	0.6
Earth	10	12.8	1.0
Jupiter	26	143.0	12.0

(i) Write down the equation that links gravitational field strength, mass and weight.

.....

(1 mark)

(ii) An astronaut has a mass of 75 kg. Calculate the weight of the astronaut on Venus. Show clearly how you work out your answer.

.....

.....

Weight of astronaut = ...newtons

(2 marks)

(iii) Why would the astronaut weigh more on the Earth than on Venus?

.....

.....

(1 mark)

(iv) The radius of the orbit of Jupiter is greater than the radius of the orbit of Mercury, Venus or the Earth. What evidence is given in the table to show this?

.....

.....

(1 mark)

4.5.1.3 Gravity

Question 01 · continued

MARGIN BLANK

(b) *To gain full marks in this question you should write your ideas in good English. Put them into a sensible order and use the correct scientific words.*

Explain briefly how stars like the Sun are thought to have been formed.

.....

.....

.....

.....

(2 marks)

7

4.5.1.3 Gravity

Question 02

June 2003 | 3451H | Original Q6 | Legacy

6 (a) Every object has a *centre of mass*. What is meant by the *centre of mass*?

.....

.....

(1 mark)

(b) The drawing shows a thin sheet of plastic. The sheet is 250 mm wide. Two holes, each with a radius of 2 mm, have been drilled through the sheet.

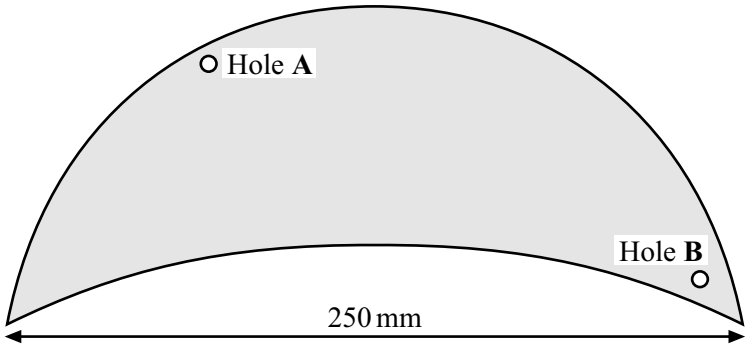

Describe how you could use:

- a clamp and stand
- a steel rod 100 mm long and with a radius of 1 mm
- a weight on a thin piece of string (= a plumb line)
- a ruler
- a pen which will write on the plastic sheet

to find the centre of mass of the plastic sheet.

To gain full marks in this question you should write your ideas in good English. Put them into a sensible order and use the correct scientific words.

.....

.....

.....

.....

.....

.....

.....

.....

.....

.....

(5 marks)

4.5.1.3 Gravity

Question 02 · continued

MARGIN BLANK

(c) There is a trapdoor in the ceiling of a house.
The trapdoor weighs 44 N.
The drawing shows a side view of the trapdoor.

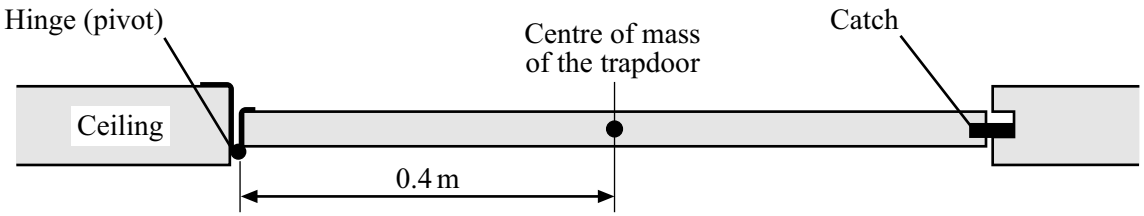

(i) Complete the **three** spaces to give the equation which is used to calculate the turning effect of a force.

..... = ... × perpendicular ..... between line of action and pivot

(1 mark)

(ii) Calculate the turning effect, about the hinge, due to the weight of the trapdoor.

Show clearly how you work out your final answer and give the unit.

.....

.....

Turning effect = ...

(3 marks)

10

4.5.1.3 Gravity

Question 03

June 2003 | 3462H3 | Original Q4 | Legacy

4 (a) The table gives information about some planets.

Name of planet	Gravitational field strength in N/kg	Diameter of planet in thousands of km	Time for 1 orbit around the sun in years
Mercury	4	4.9	0.2
Venus	9	12.0	0.6
Earth	10	12.8	1.0
Jupiter	26	143.0	12.0

(i) Write down the equation that links gravitational field strength, mass and weight.

.....

(1 mark)

(ii) An astronaut has a mass of 75 kg. Calculate the weight of the astronaut on Venus. Show clearly how you work out your answer.

.....

.....

Weight of astronaut = ...newtons

(2 marks)

(iii) Why would the astronaut weigh more on the Earth than on Venus?

.....

.....

(1 mark)

(iv) The radius of the orbit of Jupiter is greater than the radius of the orbit of Mercury, Venus or the Earth. What evidence is given in the table to show this?

.....

.....

(1 mark)

4.5.1.3 Gravity

Question 03 · continued

MARGIN BLANK

(b) *To gain full marks in this question you should write your ideas in good English. Put them into a sensible order and use the correct scientific words.*

Explain briefly how stars like the Sun are thought to have been formed.

.....

.....

.....

.....

(2 marks)

7

4.5.1.3 Gravity

Question 04

June 2005 | 3451 | Original Q13 | Legacy

13 A machine is used to lift materials on a building site.

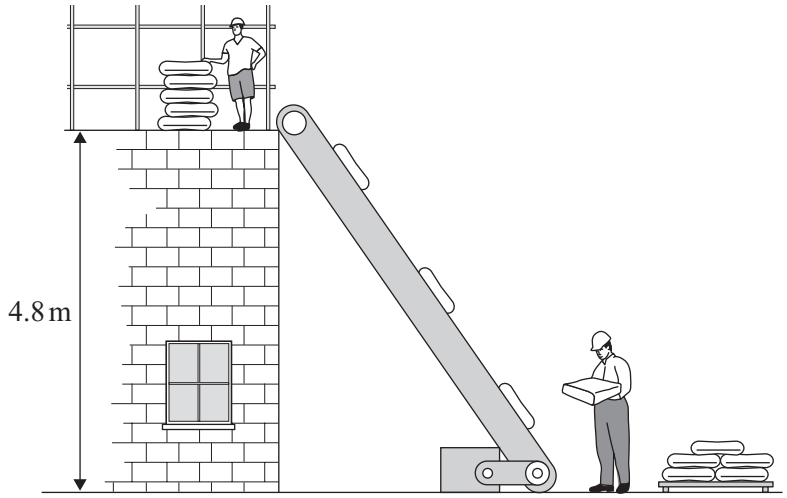

(a) (i) Write down the equation that links change in gravitational potential energy, change in vertical height and weight.

.....

(1 mark)

(ii) A 25 kg bag of cement is lifted from the ground to the top of the building.
Calculate the gain in the gravitational potential energy of the bag of cement.

(On Earth a 1 kg mass has a weight of 10 N.)

.....

.....

Change in gravitational potential energy = ... joules
(2 marks)

(b) The conveyor belt delivers six bags of cement each minute to the top of the building.

(i) Calculate the useful energy transferred by the machine each second.

.....

.....

.....

Useful energy transfer each second = ... J
(1 mark)

4.5.1.3 Gravity

Question 04 · continued

MARGIN BLANK

(ii) The machine is 40 % efficient.
Use the following equation to calculate the total energy supplied to the machine each second. Show how you work out your answer.

$$\text{Efficiency} = \frac{\text{useful energy transferred by device}}{\text{total energy supplied to device}}$$

.....

.....

Total energy supplied each second = ... J
(2 marks)

6

TURN OVER FOR THE NEXT QUESTION

4.5.1.3 Gravity

Question 05

June 2005 | 3462 | Original Q10 | Legacy

10 A machine is used to lift materials on a building site.

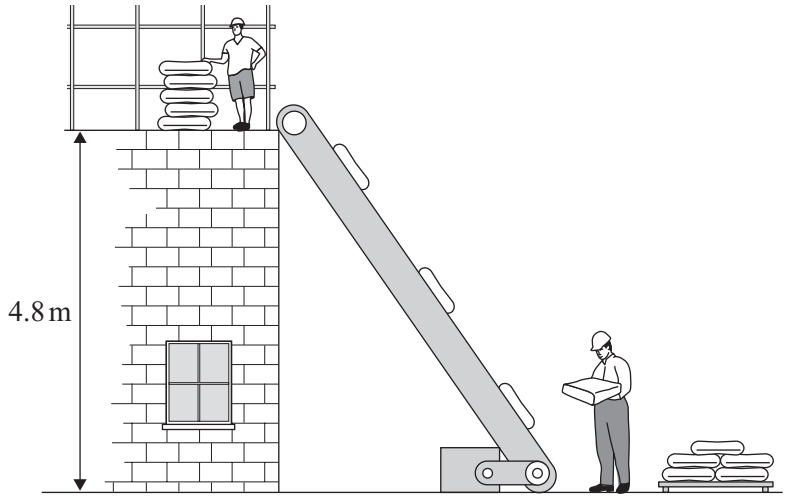

(a) (i) Write down the equation that links change in gravitational potential energy, change in vertical height and weight.

.....

(1 mark)

(ii) A 25 kg bag of cement is lifted from the ground to the top of the building.
Calculate the gain in the gravitational potential energy of the bag of cement.

(On Earth a 1 kg mass has a weight of 10 N.)

.....

.....

Change in gravitational potential energy = ... joules
(2 marks)

(b) The conveyor belt delivers six bags of cement each minute to the top of the building.

(i) Calculate the useful energy transferred by the machine each second.

.....

.....

.....

Useful energy transfer each second = ... J
(1 mark)

4.5.1.3 Gravity

Question 05 · continued

MARGIN BLANK

(ii) The machine is 40 % efficient.
Use the following equation to calculate the total energy supplied to the machine each second. Show how you work out your answer.

$$\text{Efficiency} = \frac{\text{useful energy transferred by device}}{\text{total energy supplied to device}}$$

.....

.....

Total energy supplied each second = ... J
(2 marks)

6

TURN OVER FOR THE NEXT QUESTION

4.5.1.3 Gravity

Question 06

June 2006 | 3451 | Original Q14 | Legacy

14 The diagram shows a tower used for bungee jumping.

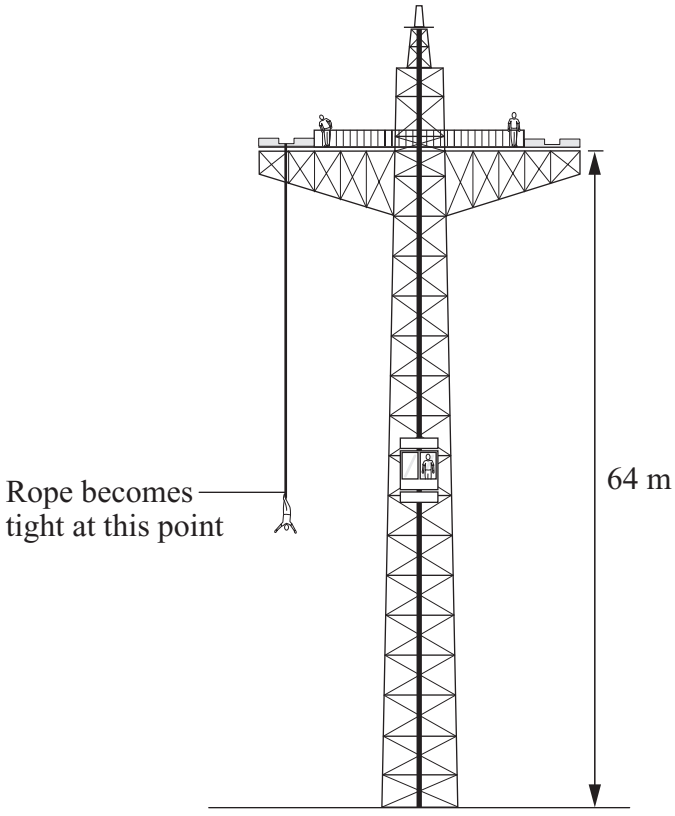

(a) A lift takes a person of mass 55 kg, to a platform 64 metres above the ground.

(i) Write down the equation that links change in gravitational potential energy, change in vertical height and weight.

.....

(1 mark)

(ii) Calculate the increase in the gravitational potential energy of the person when going from the ground to the platform.

Show clearly how you work out your final answer.
(Gravitational field strength = 10 N/kg)

.....

.....

.....

Increase in gravitational potential energy = ... joules

(2 marks)

4.5.1.3 Gravity

Question 06 · continued

BLANK

(b) The falling bungee jumper reaches a maximum speed when 15 840 joules of gravitational potential energy have been transferred into kinetic energy.

(i) Write down the equation that links kinetic energy, mass and speed.

.....

(1 mark)

(ii) Calculate the maximum speed of the falling bungee jumper.

Show clearly how you work out your final answer.

.....

.....

.....

Speed = ... m/s

(3 marks)

(c) As the rope stretches the bungee jumper slows down.

Describe fully the energy transfer that happens as the bungee jumper continues to fall towards the ground.

To gain full marks in this question you should write you ideas in good English. Put them into a sensible order and use the correct scientific words.

.....

.....

.....

.....

.....

.....

(3 marks)

10

4.5.1.3 Gravity

Question 07

June 2006 | 3451 | Original Q16 | Legacy

16 (a) The drawing shows a toy balanced on the end of someone's finger. The toy is made of wire with a metal ball at the bottom end.

(i) On the drawing, mark with an **X**, the point where you think the toy's centre of mass is.

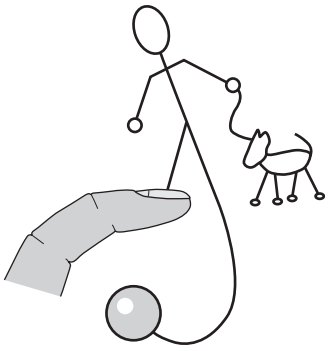

(1 mark)

(ii) Explain why you have chosen this point.

.....

.....

.....

(2 marks)

(b) The drawing shows a mobile crane and its heavy load.

(i) On the drawing, mark with an **X**, the point where you think the centre of mass of the crane **and** its heavy load is.

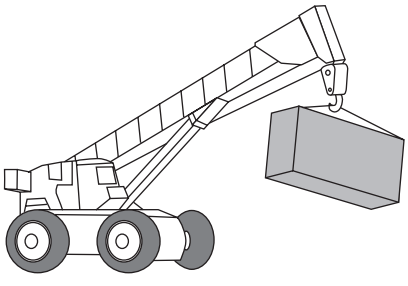

(1 mark)

(ii) Explain why you have chosen this point.

.....

.....

.....

(2 marks)

Question 07 · continued

BLANK

(c) (i) Write down the equation that is used to calculate the turning effect, or moment, of a force.

.....

.....

(1 mark)

(ii) State a unit of moment. .....

(1 mark)

(iii) The diagram shows a screwdriver being used to lever off the lid of a paint tin.

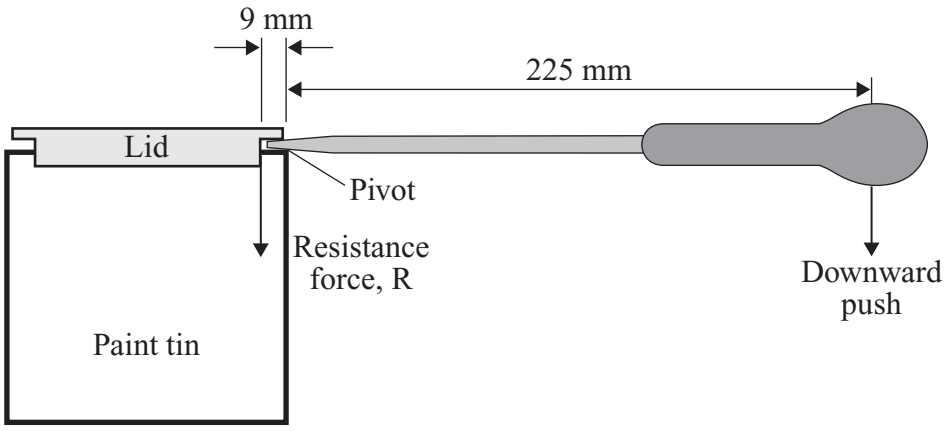

The resistance force, R, of the lid is 500 N.

Calculate the minimum downward push which is needed to lever off the lid.

Show clearly how you work out your answer and give the unit.

.....

.....

Minimum downward push = ...

(4 marks)

(d) Complete the sentence.

If an object is **not** turning then the total moments of forces trying to turn it in a ..... direction must be equal to the total moments of forces trying to turn it in an ..... direction.

(1 mark)

13

4.5.1.3 Gravity

Question 08

June 2006 | 3462 | Original Q12 | Legacy

12 The diagram shows a tower used for bungee jumping.

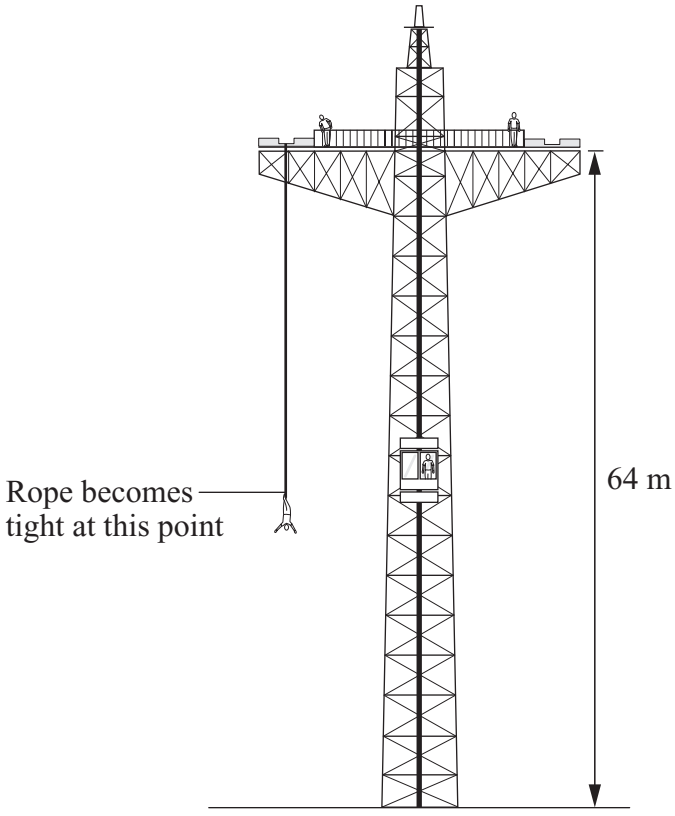

(a) A lift takes a person of mass 55 kg, to a platform 64 metres above the ground.

(i) Write down the equation that links change in gravitational potential energy, change in vertical height and weight.

.....

(1 mark)

(ii) Calculate the increase in the gravitational potential energy of the person when going from the ground to the platform.

Show clearly how you work out your final answer.
(Gravitational field strength = 10 N/kg)

.....

.....

.....

Increase in gravitational potential energy = ... joules

(2 marks)

4.5.1.3 Gravity

Question 08 · continued

BLANK

(b) The falling bungee jumper reaches a maximum speed when 15 840 joules of gravitational potential energy have been transferred into kinetic energy.

(i) Write down the equation that links kinetic energy, mass and speed.

.....

(1 mark)

(ii) Calculate the maximum speed of the falling bungee jumper.

Show clearly how you work out your final answer.

.....

.....

.....

Speed = ... m/s

(3 marks)

(c) As the rope stretches the bungee jumper slows down.

Describe fully the energy transfer that happens as the bungee jumper continues to fall towards the ground.

To gain full marks in this question you should write your ideas in good English. Put them into a sensible order and use the correct scientific words.

.....

.....

.....

.....

.....

.....

(3 marks)

10

4.5.1.3 Gravity

Question 09

January 2009 | PHY2H | Original Q1 | Legacy

1 The diagram shows the passenger train on part of a rollercoaster ride.

1 (a) Which arrow shows the direction of the resultant force acting on the passenger train?

Put a tick (✓) in the box next to your choice.

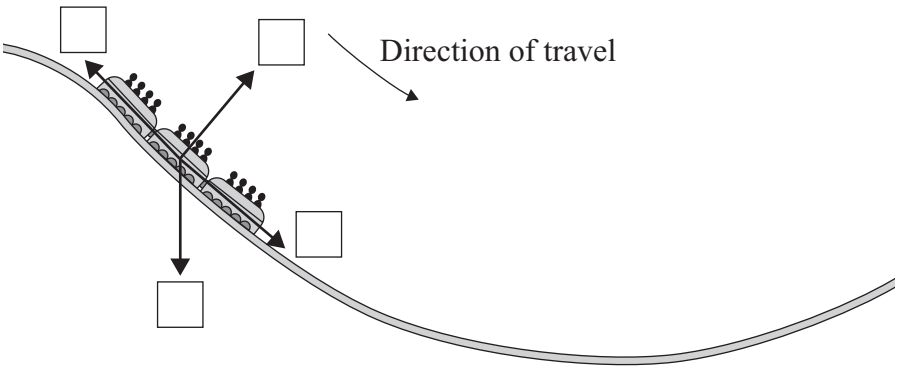

(1 mark)

1 (b) At the bottom of the slope, the passengers in the train all have the same speed but they each have a different kinetic energy.

Why is the kinetic energy of each passenger different?

.....

.....

(1 mark)

1 (c) For part of the ride, the maximum gravitational field strength acting on the passengers seems 3 times bigger than normal.

Normal gravitational field strength = 10 N/kg

1 (c) (i) Calculate the maximum gravitational field strength that seems to act on the passengers during the ride.

.....

.....

Maximum gravitational field strength = ... N/kg

(1 mark)

4.5.1.3 Gravity

Question 09 · continued

for mark

1 (c) (ii) One of the passengers has a mass of 80 kg.

Use the equation in the box to calculate the maximum weight this passenger seems to have during the ride.

weight = mass × gravitational field strength

Show clearly how you work out your answer.

.....

.....

Maximum weight = ... N

(2 marks)

5

Turn over for the next question

4.5.1.3 Gravity

Question 10

4 The diagram shows a back view of a computer monitor.

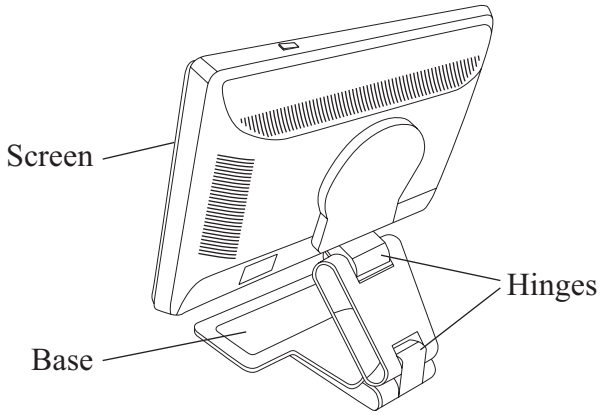

4 (a) In normal use, the monitor is *stable.*

4 (a) (i) Explain the meaning, in the above sentence, of the word *stable*.

.....

.....

.....

.....

(2 marks)

4 (a) (ii) State the relationship between the total clockwise moment and the total anticlockwise moment about any axis of the monitor when it is stable.

.....

.....

(1 mark)

4.5.1.3 Gravity

Question 10 · continued

for mark

4 (b) The instruction booklet explains that the screen can be tilted.
It also includes a warning.

Caution
The monitor can tip over if the screen is tilted too far back.

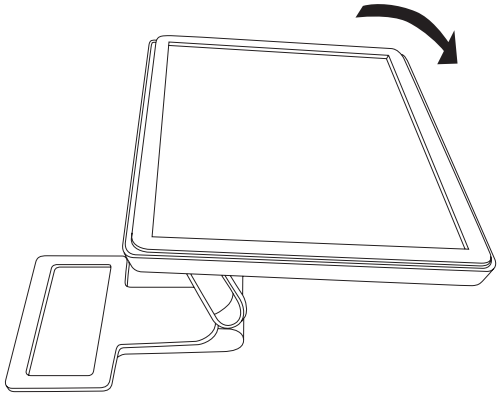

Explain why the monitor will tip over if the screen is tilted too far back.

Include the words *centre of mass*, *weight* and *moment* in your explanation.

.....

.....

.....

.....

.....

.....

(3 marks)

6

4.5.1.3 Gravity

Question 11

June 2010 | PHY2H | Original Q1 | Legacy

1 (a) The diagram shows a cable car used to take skiers to the top of a mountain.

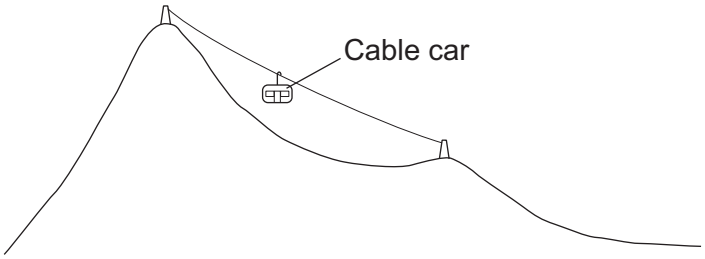

1 (a) (i) The total mass of the cable car and skiers is 7500 kg.

Use the equation in the box to calculate the weight of the cable car and skiers.

weight = mass × gravitational field strength

gravitational field strength = 10 N/kg

Show clearly how you work out your answer and give the unit.

.....

.....

Weight = ...

(3 marks)

4.5.1.3 Gravity

Question 11 · continued

1 (a) (ii) The cable car moves at a constant speed. It lifts skiers through a vertical height of 800 metres in 7 minutes.

Use the following equation to calculate the work done to lift the cable car and skiers.

work done = force applied × distance moved in the direction of force

Show clearly how you work out your answer.

.....

.....

Work done = ... J

(2 marks)

1 (b) The diagram shows a skier who is accelerating down a steep ski slope.



1 (b) (i) Draw an arrow on the diagram to show the direction of the resultant force acting on the skier.

(1 mark)

1 (b) (ii) How and why does the kinetic energy of the skier change?

.....

.....

.....

.....

(2 marks)

Question 1 continues on the next page

4.5.1.3 Gravity

Question 11 · continued

1 (c) Last year, 18 000 skiers suffered a head injury. It is thought that nearly 8000 of these injuries could have been avoided if the skier had been wearing a helmet. However, at present, there are no laws to make skiers wear helmets.

Suggest why skiers should be made aware of the benefits of wearing a helmet.

.....

.....

(1 mark)

9

4.5.1.3 Gravity

Question 12

June 2011 | PHY3H | Original Q2 | Legacy

2 (a) A student investigates the moment of a force.

2 (a) (i) What does the word *moment* mean in this sentence?

.....

.....

(1 mark)

2 (a) (ii) The diagram shows how she sets up her apparatus.

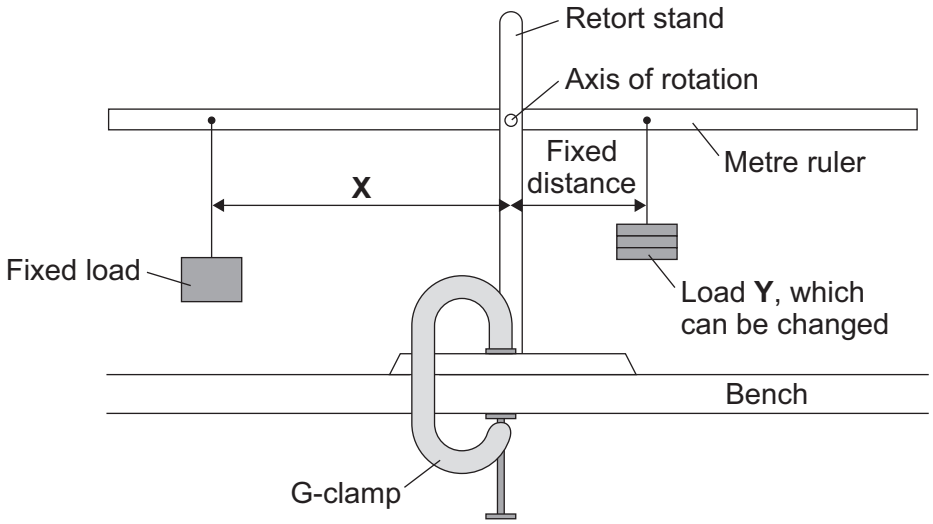

Suggest the purpose of the G-clamp.

.....

.....

(1 mark)

4.5.1.3 Gravity

Question 12 · continued

2 (a) (iii) A horizontal rod fits into a hole at the centre of the metre ruler. This is the axis of rotation. The student changes the load **Y** and adjusts the distance **X** until the metre ruler is horizontal. She takes six pairs of measurements which are shown in the table.

Load Y in newtons	Distance X in centimetres
1	7
2	14
3	21
4	28
5	35
6	42

Explain fully how distance **X** varies with load **Y**.

.....

.....

.....

.....

.....

(2 marks)

2 (a) (iv) The weight of the ruler can be ignored in this experiment.

Which statement gives the reason why?

Put a tick (✓) in the box next to your answer.

The weight of the ruler is so small it is negligible. ☐

The centre of mass of the ruler is at the axis of rotation. ☐

The ruler is a symmetrical object. ☐

(1 mark)

Question 2 continues on the next page

4.5.1.3 Gravity

Question 12 · continued

2 (b) In the summer, a town council fits hanging baskets to some of its lamp posts.

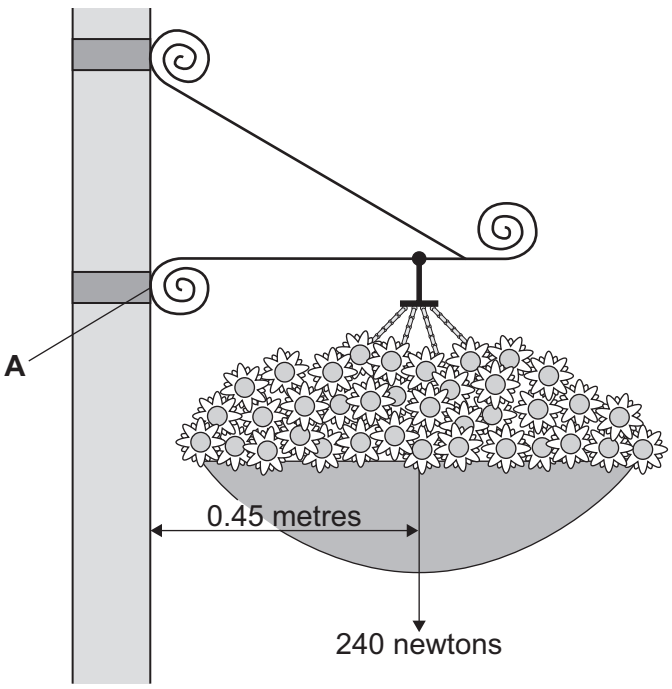

Use the information in the diagram and the equation in the box to calculate the moment produced by the weight of the hanging basket about an axis through point **A**.

moment = force × perpendicular distance from the line of action of the force to the axis of rotation

Show clearly how you work out your answer **and** give the unit.

.....

.....

.....

.....

Moment =.....

(3 marks)

8

4.5.1.3 Gravity

Question 13

June 2012 | PH2HP | Original Q3 | Legacy

3 (a) The diagram shows the forces acting on a parachutist in free fall.

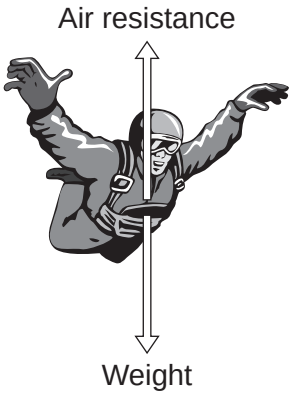

The parachutist has a mass of 75 kg.

Calculate the weight of the parachutist.

gravitational field strength = 10 N/kg

Use the correct equation from the Physics Equations Sheet.

Show clearly how you work out your answer and give the unit.

.....

.....

Weight = ...

(3 marks)

4.5.1.3 Gravity

Question 13 · continued

3 (b) *In this question you will be assessed on using good English, organising information clearly and using specialist terms where appropriate.*

The graph shows how the vertical velocity of a parachutist changes from the moment the parachutist jumps from the aircraft until landing on the ground.

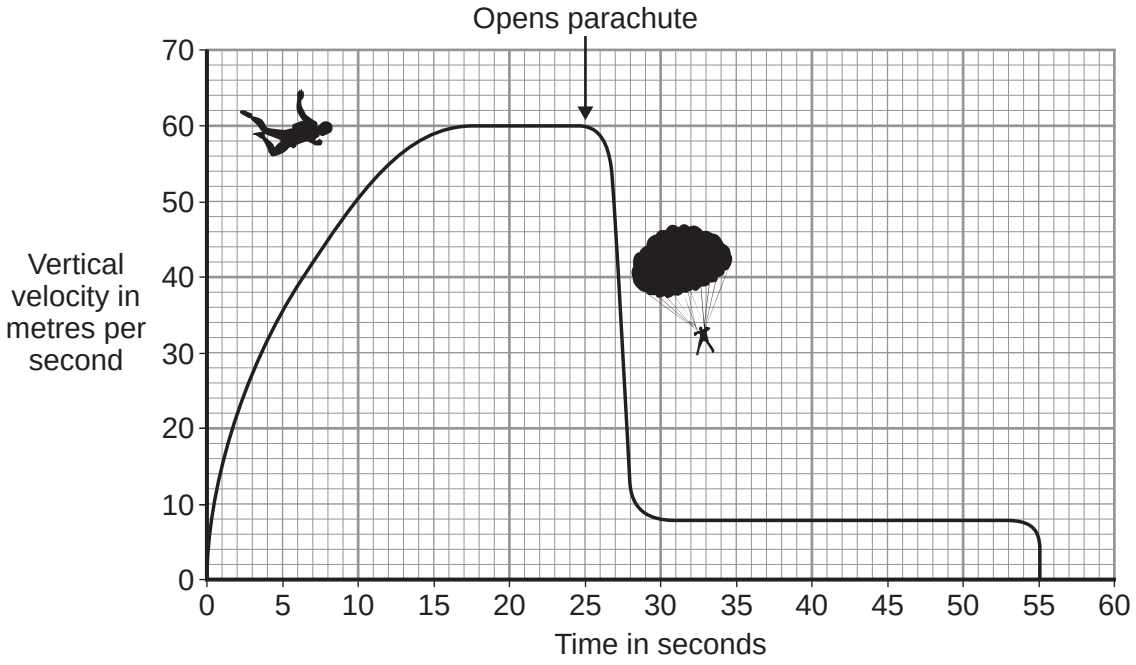

Using the idea of forces, explain why the parachutist reaches a terminal velocity and why opening the parachute reduces the terminal velocity.

.....

.....

.....

.....

.....

.....

.....

.....

.....

.....

(6 marks)

Question 3 continues on the next page

4.5.1.3 Gravity

Question 13 · continued

3 (c) A student wrote the following hypothesis.

'The larger the area of a parachute, the slower a parachutist falls.'

To test this hypothesis the student made three model parachutes, **A**, **B** and **C**, from one large plastic bag. The student dropped each parachute from the same height and timed how long each parachute took to fall to the ground.

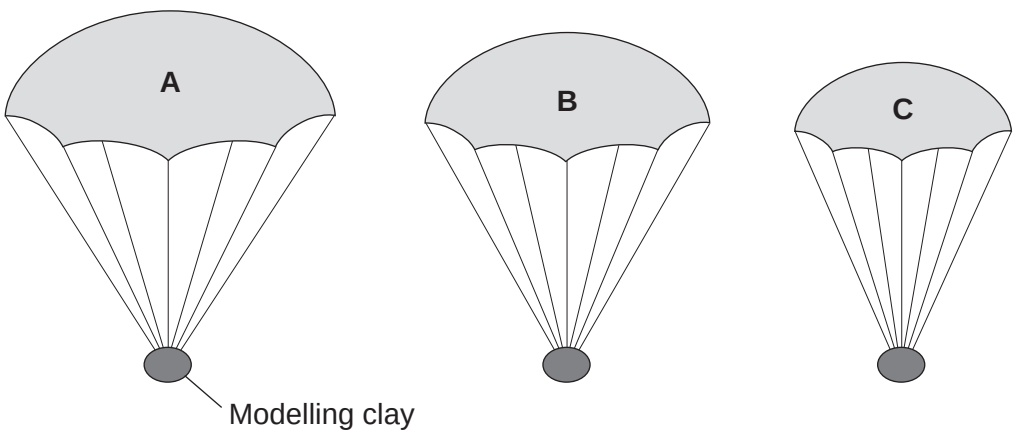

3 (c) (i) The height that the student dropped the parachute from was a control variable.

Name **one** other control variable in this experiment.

.....

(1 mark)

3 (c) (ii) Use the student's hypothesis to predict which parachute, **A**, **B** or **C**, will hit the ground first.

Write your answer in the box. ☐

Give a reason for your answer.

.....

.....

.....

(2 marks)

12

4.5.1.3 Gravity

Question 14

June 2012 | PH2HP | Original Q4 | Legacy

4 The miners working in a salt mine use smooth wooden slides to move quickly from one level to another.

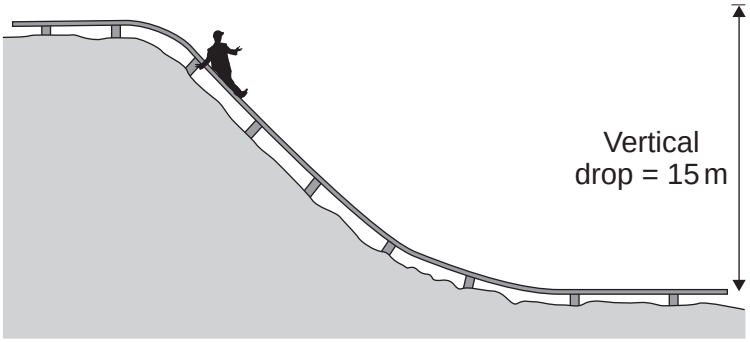

4 (a) A miner of mass 90 kg travels down the slide.

Calculate the change in gravitational potential energy of the miner when he moves 15m vertically downwards.

gravitational field strength = 10 N/kg

Use the correct equation from the Physics Equations Sheet.

Show clearly how you work out your answer.

.....

.....

Change in gravitational potential energy = ... J

(2 marks)

4.5.1.3 Gravity

Question 14 · continued

4 (b) Calculate the **maximum** possible speed that the miner could reach at the bottom of the slide.

Use the correct equation from the Physics Equations Sheet.

Show clearly how you work out your answer.

Give your answer to an appropriate number of significant figures.

.....

.....

.....

.....

Maximum possible speed = ... m/s

(3 marks)

4 (c) The speed of the miner at the bottom of the slide is much less than the calculated maximum possible speed.

Explain why.

.....

.....

.....

.....

.....

.....

.....

(3 marks)

8

4.5.1.3 Gravity

Question 15

June 2014 | PH2HP | Original Q1 | Legacy

1 **Figure 1** shows a slide in a children's playground.

Figure 1

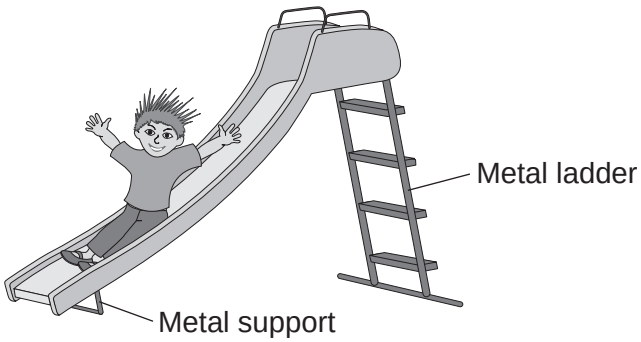

1 (a) A child of mass 18 kilograms goes down the slide.

The vertical distance from the top to the bottom of the slide is 2.5 metres.

Calculate the decrease in gravitational potential energy of the child sliding from the top to the bottom of the slide.

Gravitational field strength = 10 N/kg

Use the correct equation from the Physics Equations Sheet.

[2 marks]

.....

.....

.....

Decrease in gravitational potential energy = ... J

4.5.1.3 Gravity

Question 15 · continued

1 (b) The slide is made of plastic.

1 (b) (i) The child becomes electrically charged when he goes down the slide.

Explain why.

[2 marks]

.....

.....

.....

.....

1 (b) (ii) Going down the slide causes the child's hair to stand on end.

What conclusion about the electrical charge on the child's hair can be made from this observation?

[2 marks]

.....

.....

Give a reason for your answer.

.....

.....

1 (b) (iii) Why would the child **not** become electrically charged if the slide was made from metal?

[1 mark]

.....

.....

7

4.5.1.3 Gravity

Question 16

June 2015 | PH2HP | Original Q6 | Legacy

6 (a) **Figure 7** shows the forces acting on a model air-powered rocket just after it has been launched vertically upwards.

Figure 7

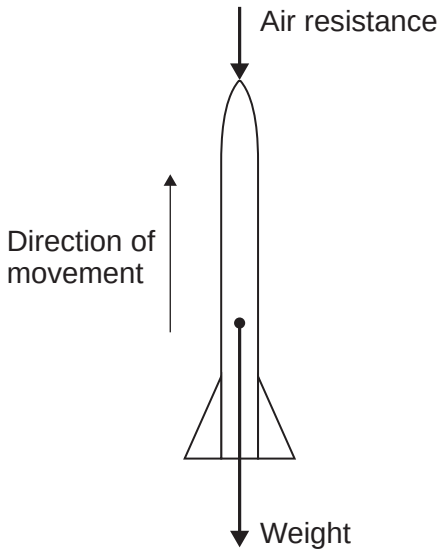

6 (a) (i) How does the velocity of the rocket change as the rocket moves **upwards**?

[2 marks]

.....

Give a reason for your answer.

.....

.....

6 (a) (ii) The velocity of the rocket is not the same as the speed of the rocket.

What is the difference between the velocity of an object and the speed of an object?

[1 mark]

.....

.....

.....

4.5.1.3 Gravity

Question 16 · continued

6 (b) The speed of the rocket just after being launched is 12 m/s.
The mass of the rocket is 0.05 kg.

6 (b) (i) Calculate the kinetic energy of the rocket just after being launched.

Use the correct equation from the Physics Equations Sheet.

[2 marks]

.....

.....

.....

Kinetic energy = ... J

6 (b) (ii) As the rocket moves upwards, it gains gravitational potential energy.

State the maximum gravitational potential energy gained by the rocket.

Ignore the effect of air resistance.

[1 mark]

Maximum gravitational potential energy = ... J

6 (b) (iii) Calculate the maximum height the rocket will reach.

Ignore the effect of air resistance.

Gravitational field strength = 10 N/kg.

Use the correct equation from the Physics Equations Sheet.

[2 marks]

.....

.....

.....

Maximum height = ... m

Question 6 continues on the next page

4.5.1.3 Gravity

Question 16 · continued

6 (b) (iv) **Figure 8** shows four velocity–time graphs.

Figure 8

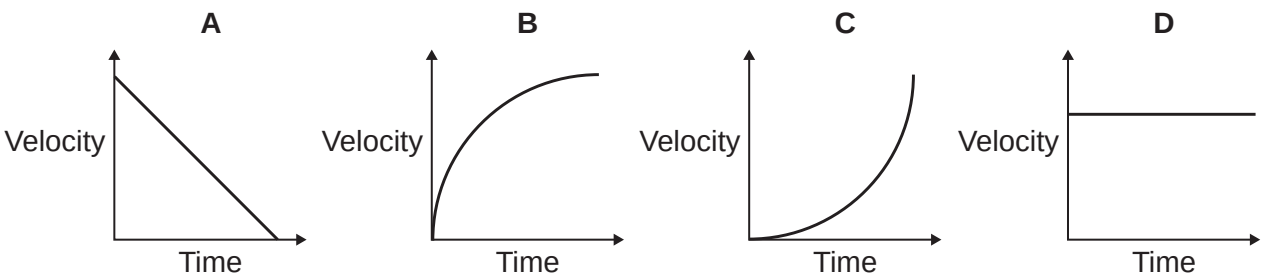

Taking air resistance into account, which graph, **A**, **B**, **C** or **D**, shows how the velocity of the rocket changes as it **falls** from the maximum height it reached until it just hits the ground?

[1 mark]

Write the correct answer in the box.

4.5.1.3 Gravity

Question 16 · continued

6 (c) The rocket can be launched at different angles to the horizontal.
The horizontal distance the rocket travels is called the range.

Figure 9 shows the paths taken by the rocket when launched at different angles.
Air resistance has been ignored.

Figure 9

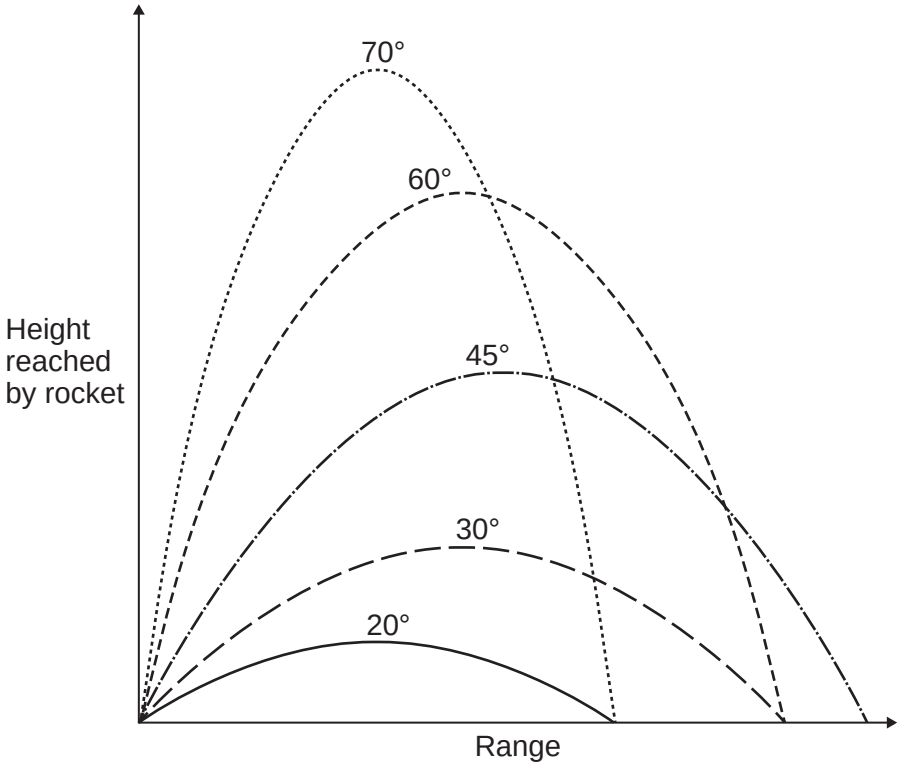

What pattern links the angle at which the rocket is launched and the range of the rocket?

[2 marks]

.....

.....

.....

.....

11

4.5.1.3 Gravity

Question 17

June 2016 | PH2HP | Original Q5 | Legacy

5 **Figure 11** shows an exercise device called a chest expander. The three springs are identical.

Figure 11

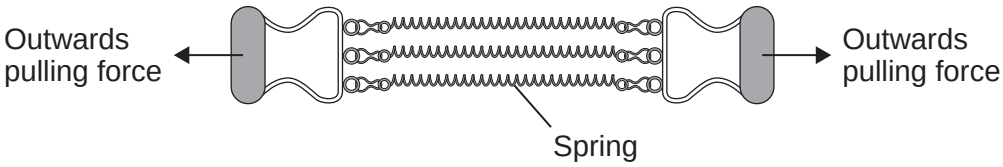

A person pulls outwards on the handles and does work to stretch the springs.

5 (a) Complete the following sentence.

[1 mark]

When the springs are stretched _____ _____ energy is stored in the springs.

5 (b) **Figure 12** shows how the extension of a single spring from the chest expander depends on the force acting on the spring.

Figure 12

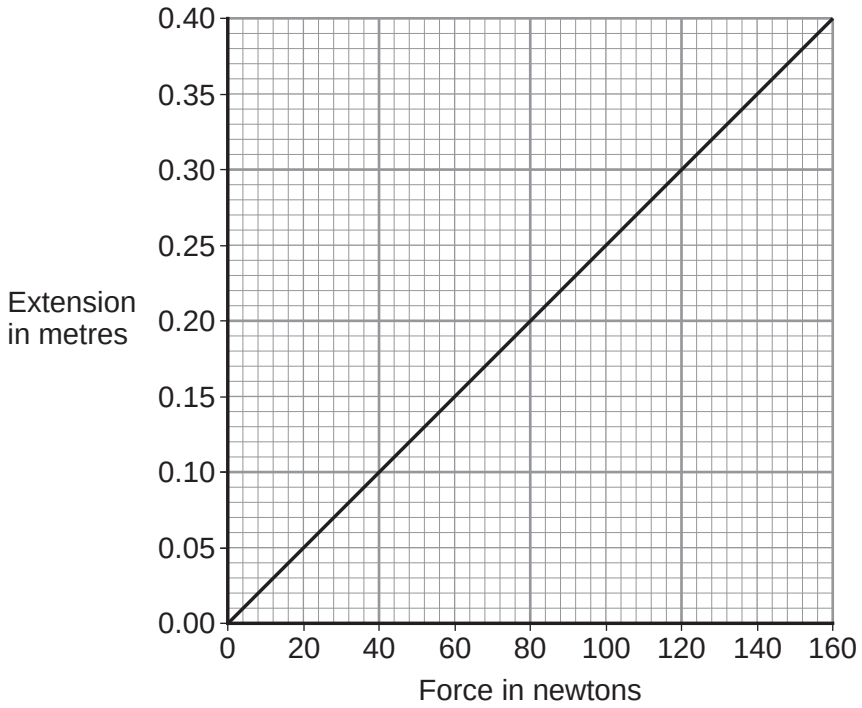

4.5.1.3 Gravity

Question 17 · continued

5 (b) (i) How can you tell, from **Figure 12**, that the limit of proportionality of the spring has not been exceeded?

[1 mark]

_____

_____

5 (b) (ii) Use data from **Figure 12** to calculate the spring constant of the spring.
Give the unit.

Use the correct equation from the Physics Equations Sheet.

[3 marks]

_____

_____

_____

Spring constant = _____ Unit _____

5 (b) (iii) Three identical resistors joined in parallel in an electrical circuit share the total current in the circuit.

In a similar way, the three springs in the chest expander share the total force exerted.

By considering this similarity, use **Figure 12** to determine the total force exerted on the chest expander when each spring is stretched by 0.25 m.

[2 marks]

_____

_____

Total force = _____ N

Question 5 continues on the next page

4.5.1.3 Gravity

Question 17 · continued

5 (c) The student in **Figure 13** is doing an exercise called a chin-up.

Figure 13

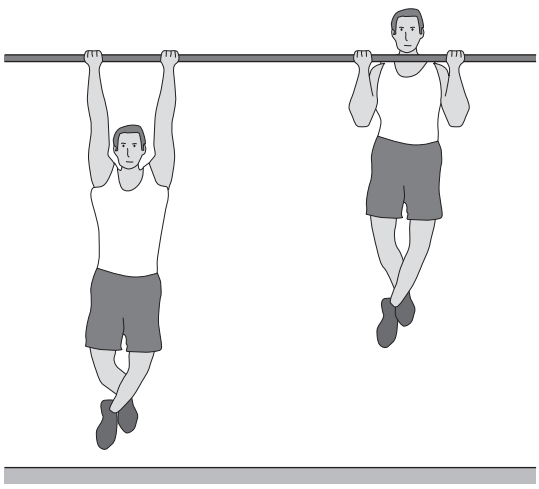

Each time the student does one chin-up he lifts his body 0.40 m vertically upwards.
The mass of the student is 65 kg.
The student is able to do 12 chin-ups in 60 seconds.

Calculate the power developed by the student.

Gravitational field strength = 10 N/kg

Use the correct equations from the Physics Equations Sheet.

[3 marks]

Power = _____ W

10

4.5.1.3 Gravity

Question 18

June 2016 | PH2HP | Original Q7 | Legacy

7 **Figure 14** shows a person using a device called a jetpack. Water is forced downwards from the jetpack and produces an upward force on the person.

Figure 14

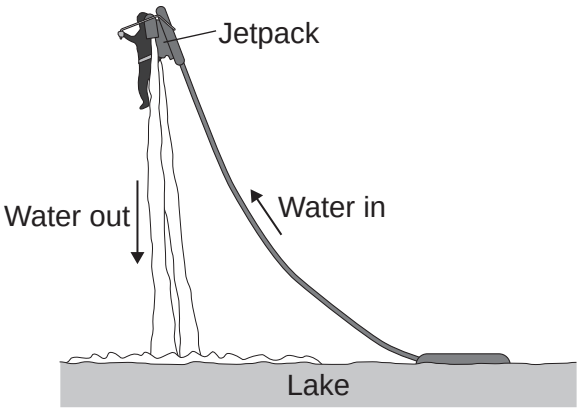

7 (a) State the condition necessary for the person to be able to remain stationary in mid-air.

[1 mark]

_____

_____

7 (b) The person weighs 700 N and the jetpack weighs 140 N.

7 (b) (i) Calculate the combined mass of the person and the jetpack.

Gravitational field strength = 10 N/kg

Use the correct equation from the Physics Equations Sheet.

[2 marks]

_____

_____

_____

Combined mass = _____ kg

4.5.1.3 Gravity

Question 18 · continued

7 (b) (ii) Increasing the upward force to 1850 N causes the person to accelerate upwards.

Calculate the acceleration of the person and the jetpack. Give the unit.

Use the correct equation from the Physics Equations Sheet.

[3 marks]

Acceleration = _____ Unit _____

6

4.5.1.3 Gravity

Question 19

June 2016 | PH3HP | Original Q6 | Legacy

6 In a balancing game, wooden blocks are used to build a tower. The shape of the tower at the start of the game is shown in **Figure 11**. During the game, some of the blocks are taken out and put on top of the tower as shown in **Figure 12**. This causes the centre of mass of the tower to change.

Figure 11

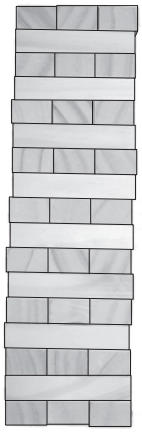

Figure 12

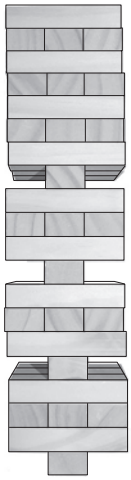

6 (a) (i) State what is meant by the term 'centre of mass'.

[1 mark]

6 (a) (ii) Give **two** reasons why the tower in **Figure 12** is less stable than the tower in **Figure 11**.

[2 marks]

1 _____

2 _____

4.5.1.3 Gravity

Question 19 · continued

6 (b) **Figure 13** shows a different arrangement for the wooden blocks.

Figure 13



A block was placed in position **A** and an identical block was placed in position **B** at the same time.

Explain why the tower did not fall over. You should include reference to moments in your answer.

[2 marks]

5

4.5.1.3 Gravity

Question 20

June 2018 | 8463/2H | Original Q4

0 4 **Figure 6** shows an unusually shaped container.

The container has four vertical tubes of different shape and size.

Figure 6

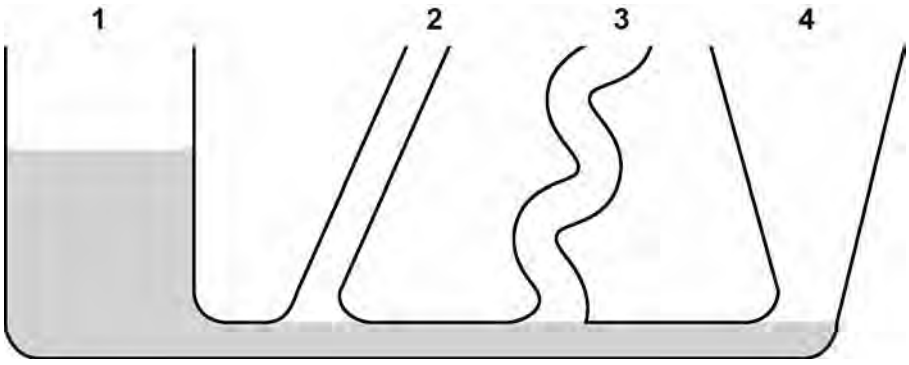

Water is poured into the container up to the level shown in tube **1**.

0 4 . 1 Complete **Figure 6** to show the height of the water in tubes **2**, **3** and **4**.

[1 mark]

0 4 . 2 The further a swimmer dives below the surface of the sea, the greater the pressure on the swimmer.

Explain why.

[2 marks]

4.5.1.3 Gravity

Question 20 · continued

0 4 . 3 A person swims from a depth of 0.50 m to a depth of 1.70 m below the surface of the sea.

density of the sea water = 1030 kg/m^3

gravitational field strength = 9.8 N/kg

Calculate the increase in pressure on the swimmer.

Give the unit.

Use an equation from the Physics Equation Sheet.

[4 marks]

Increase in pressure = _____ Unit _____

4.5.1.3 Gravity

Question 21

June 2018 | 8463/2H | Original Q6

0 6 **Figure 8** shows a boat floating on the sea. The boat is stationary.

Figure 8



0 6 . 1 **Figure 9** shows part of the free body diagram for the boat.

Complete the free body diagram for the boat.

[2 marks]

Figure 9



4.5.1.3 Gravity

Question 21 · continued

0 6 . 2 Calculate the mass of the boat.

Use the information given in **Figure 9**.

gravitational field strength = 9.8 N/kg

Give your answer to **two** significant figures.

[4 marks]

Mass = _____ kg

0 6 . 3 When the boat propeller pushes water backwards, the boat moves forwards.
The force on the water causes an equal and opposite force to act on the boat.

Which law is this an example of?

[1 mark]

Question 6 continues on the next page

4.5.1.3 Gravity

Question 21 · continued

0 6 . 4 **Figure 10** shows the boat towing a small dinghy.

Figure 10

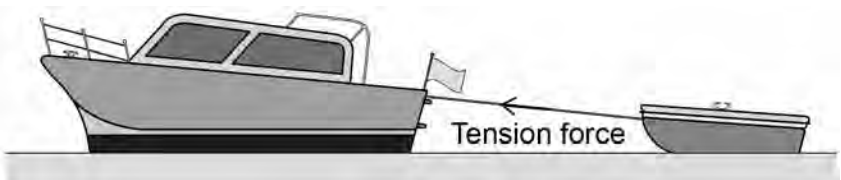

The tension force in the tow rope causes a horizontal force forwards and a vertical force upwards on the dinghy.

horizontal force forwards = 150 N
vertical force upwards = 50 N

4.5.1.3 Gravity

Question 21 · continued

Figure 11 shows a grid.

Draw a vector diagram to determine the magnitude of the tension force in the tow rope and the direction of the force this causes on the dinghy.

[4 marks]

Figure 11

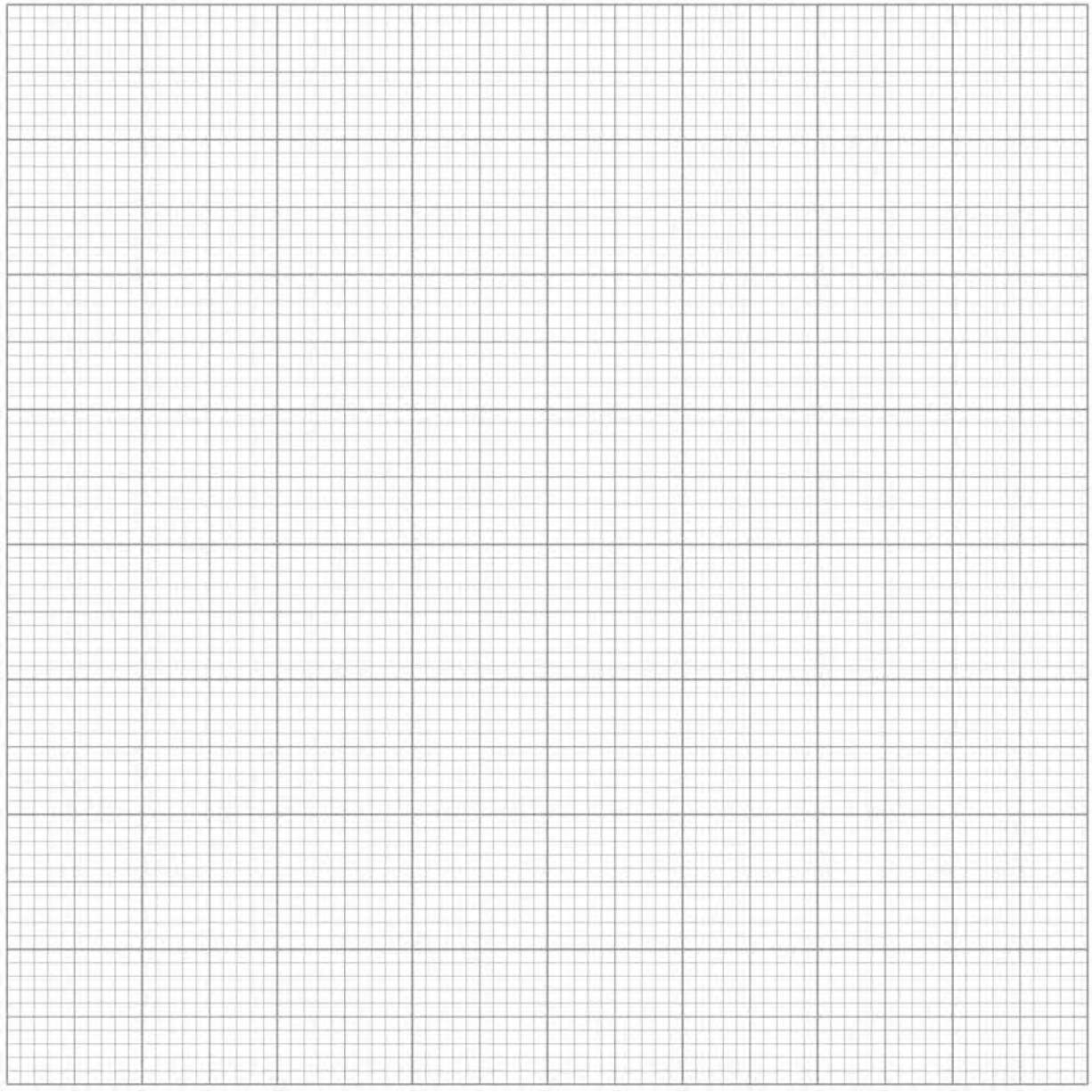

Magnitude of the tension force in the tow rope = _____ N

Direction of the force on the dinghy caused by the tension force in the tow rope = _____

11

4.5.1.3 Gravity

Question 22

June 2019 | 8463/1H | Original Q7

0 7 **Figure 9** shows a person sliding down a zip wire.

Figure 9

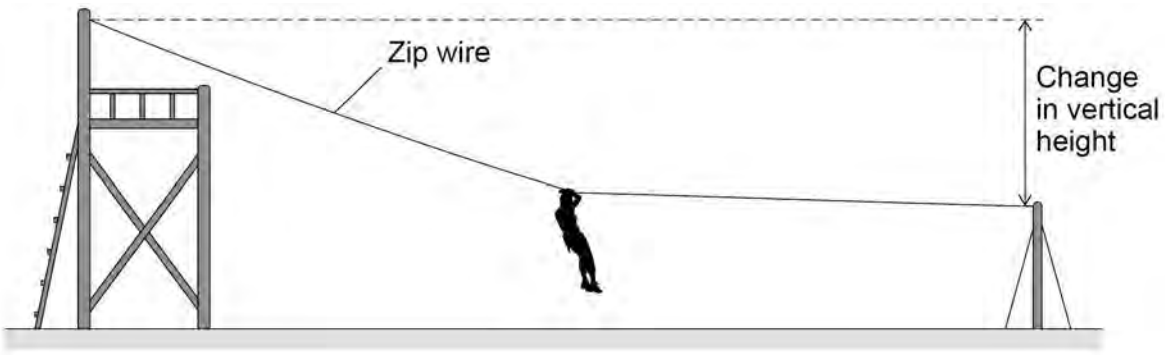

0 7 . 1 As the person slides down the zip wire, the change in the gravitational potential energy of the person is 1.47 kJ

The mass of the person is 60 kg

gravitational field strength = 9.8 N/kg

Calculate the change in vertical height of the person.

[3 marks]

Change in vertical height = _____ m

4.5.1.3 Gravity

Question 22 · continued

0 7 . 2 As the person moves down the zip wire her increase in kinetic energy is less than her decrease in gravitational potential energy.

Explain why.

[2 marks]

0 7 . 3 Different people have different speeds at the end of the zip wire.

Explain why.

[2 marks]

7

4.5.1.3 Gravity

Question 23

November 2020 | 8463/1H | Original Q6

0 6 **Figure 9** shows a theme park ride called AquaShute.

Riders of the AquaShute sit on a sled and move down a slide.

Figure 9

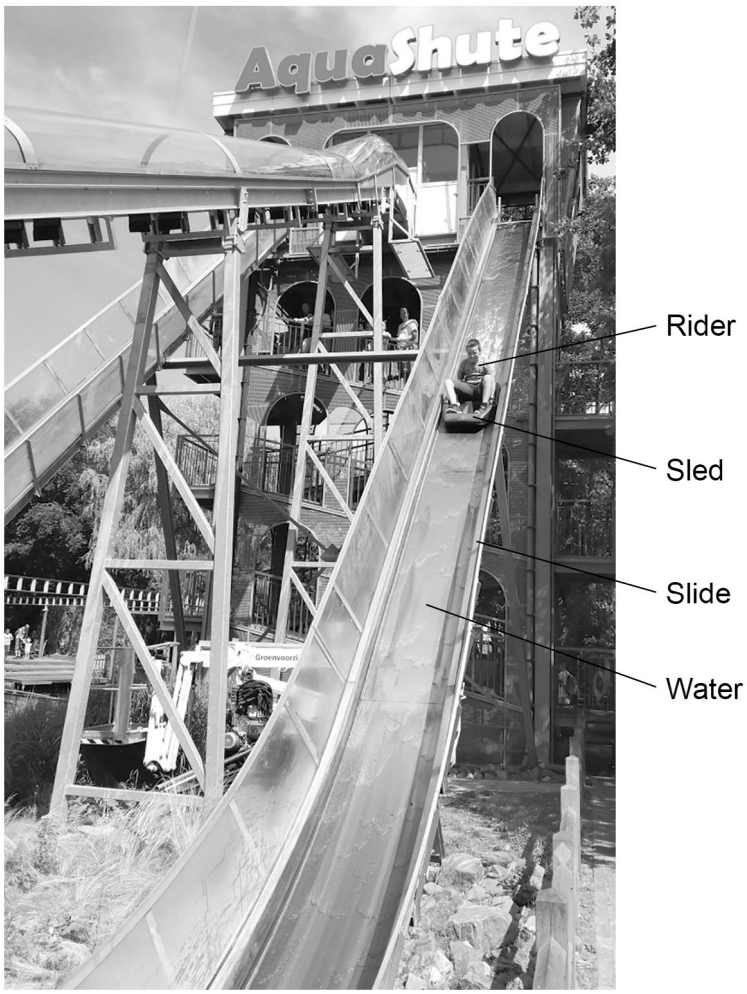

0 6 . 1 A light gate and data logger can be used to determine the speed of each rider and sled.

What two measurements are needed to determine the speed of a rider and sled?

[2 marks]

Tick (✓) **two** boxes.

- Gravitational field strength ☐
- Length of sled ☐
- Mass of rider and sled ☐
- Temperature of surroundings ☐
- Time for sled to pass light gate ☐

4.5.1.3 Gravity

Question 23 · continued

0 6 . 2 The decrease in gravitational potential energy of one rider on the slide was 8.33 kJ.

The rider moved through a vertical height of 17.0 m.

gravitational field strength = 9.8 N/kg

Calculate the mass of the rider.

[4 marks]

Mass of rider = _____ kg

0 6 . 3 At the bottom of the slide, all riders and their sleds have approximately the same speed.

Explain why.

[4 marks]

10

4.5.1.3 Gravity

Question 24

November 2021 | 8463/1H | Original Q8

0 8 **Figure 11** shows a toy car in different positions on a racing track.

Figure 11

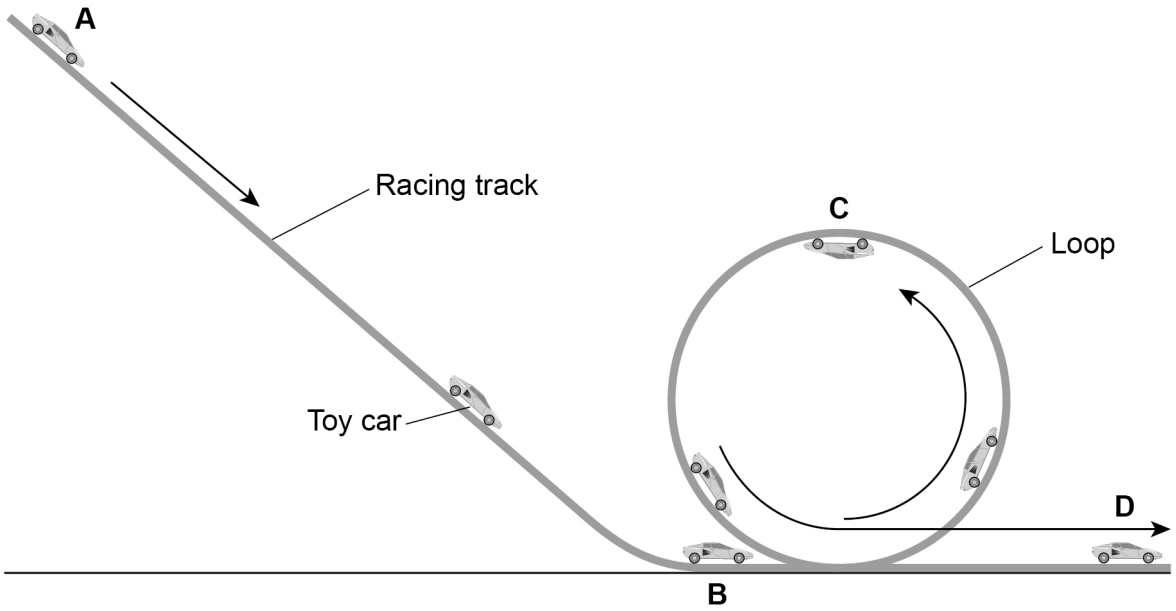

0 8 . 1 The toy car and racing track can be modelled as a closed system.

Why can the toy car and racing track be considered 'a closed system'?

[1 mark]

Tick (✓) **one** box.

The racing track and the car both have gravitational potential energy. ☐

The racing track and the car are always in contact with each other. ☐

The total energy of the racing track and the car is constant. ☐

4.5.1.3 Gravity

Question 24 · continued

0 8 . 2 The car is released from rest at position **A** and accelerates due to gravity down the track to position **B**.

mass of toy car = 0.040 kg

vertical height between position **A** and position **B** = 90 cm

gravitational field strength = 9.8 N/kg

Calculate the maximum possible speed of the toy car when it reaches position **B**.

[5 marks]

Speed = _____ m/s

Question 8 continues on the next page

4.5.1.3 Gravity

Question 24 · continued

Figure 11 is repeated below.

Figure 11

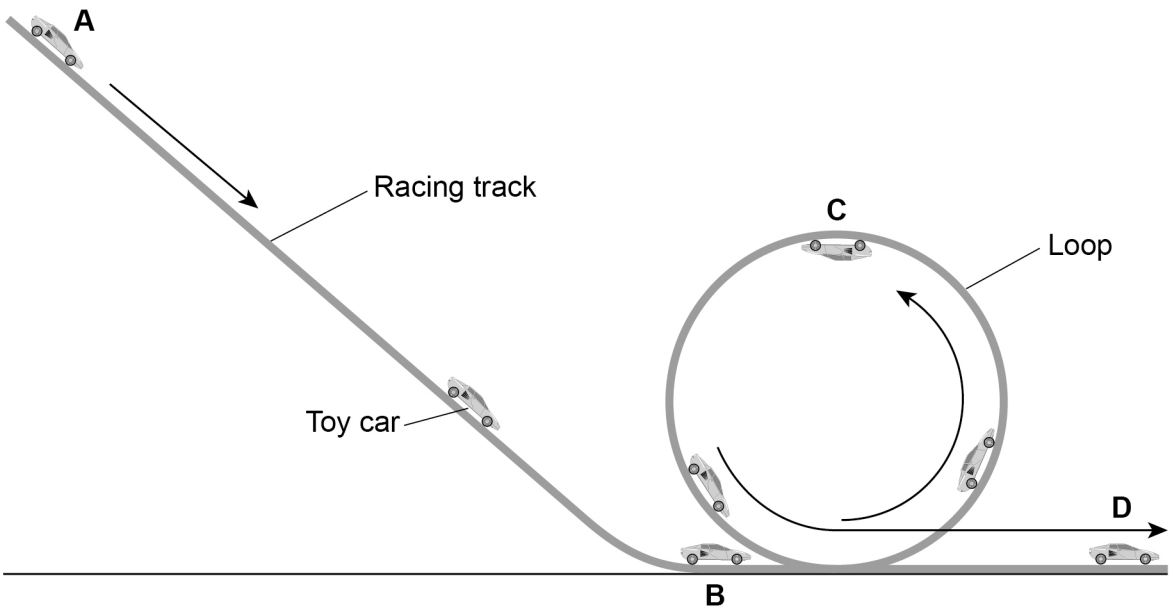

0 8 . 3 At position **C** the car's gravitational potential energy is 0.20 J greater than at position **B**.

How much kinetic energy does the car need at position **B** to complete the loop of the track?

Give a reason for your answer.

[2 marks]

Tick (✓) **one** box.

Less than 0.20 J ☐

Exactly 0.20 J ☐

More than 0.20 J ☐

Reason _____

_____

_____

8

4.5.1.3 Gravity

Question 25

June 2022 | 8463/1H | Original Q9

0 9 **Figure 10** shows a girl doing an experiment to determine her power output by running to the top of some stairs.

Figure 10

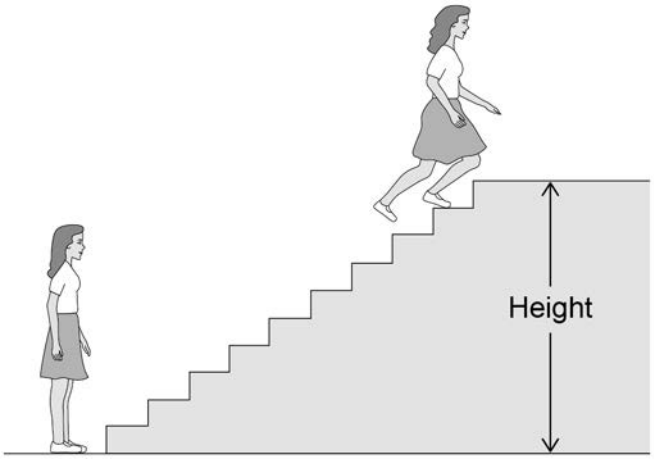

0 9 . 1 The mass of the girl was 60.0 kg.

The height of the stairs was 175 cm.

The girl ran to the top of the stairs in 1.40 s.

gravitational field strength = 9.8 N/kg

Calculate the power output of the girl.

Use the Physics Equations Sheet.

[5 marks]

Power = _____ W

4.5.1.3 Gravity

Question 25 · continued

0 9 . 2 The **total** power output of the girl was greater than the answer to question **09.1**.

Suggest **two** reasons why.

[2 marks]

1 _____

_____

2 _____

_____

0 9 . 3 A boy took more than 1.40 s to run up the same stairs.

The power output of the boy was the same as the power output of the girl.

What conclusion can be made about the boy's mass?

[1 mark]

Tick (✓) **one** box.

The boy's mass was greater than the girl's mass. ☐

The boy's mass was lower than the girl's mass. ☐

The boy's mass was the same as the girl's mass. ☐

8

4.5.1.3 Gravity

Question 26

June 2022 | 8463/2HR | Original Q5

0 5 **Figure 9** shows a balance used to measure the mass of five tomatoes.

Figure 9

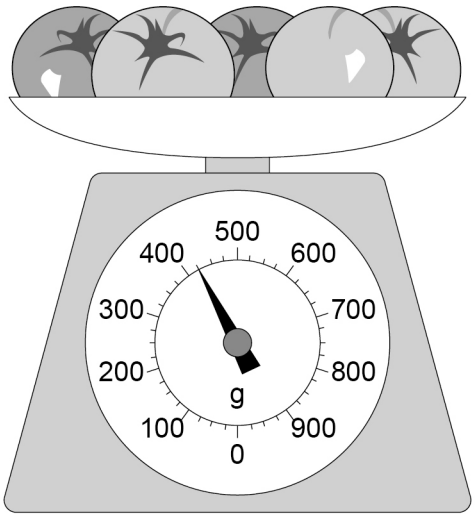

0 5 . 1 What is meant by 'centre of mass'?

[1 mark]

0 5 . 2 Calculate the mean weight of a tomato in **Figure 9**.

Use the Physics Equations Sheet.

gravitational field strength = 9.8 N/kg

[3 marks]

Weight = _____ N

Question 26 · continued

0 5 . 3 The balance in **Figure 9** contains a spring that compresses when the tomatoes are placed on the balance.

Figure 10 shows the spring with no force acting and with a 6.0 N force acting.

Figure 10

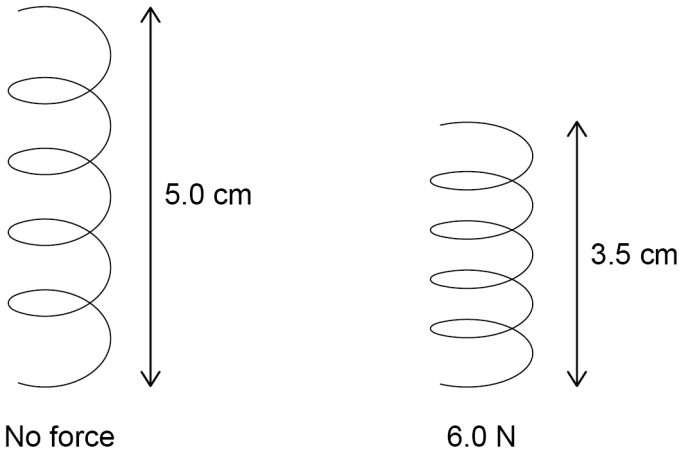

Determine the spring constant of the spring.

Use the Physics Equations Sheet.

[3 marks]

Spring constant = _____ N/m

0 5 . 4 Explain **one** property of the spring that makes it suitable for use in the balance.

[2 marks]

9

4.5.1.3 Gravity

Question 27

June 2022 | 8463/2HR | Original Q8

0 8 Diving bricks sink to the bottom of a swimming pool.

Figure 14 shows a diving brick.

Figure 14

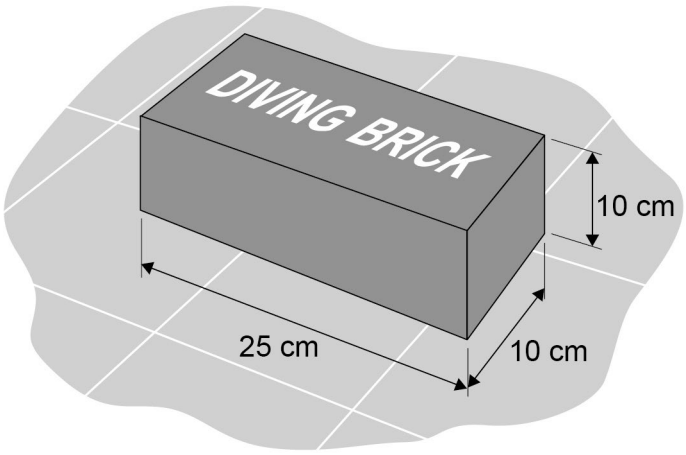

Swimmers practise diving to the bottom of the swimming pool to pick up the diving brick.

0 8 . 1 Explain why the forces on the brick at the bottom of the pool cause the brick to be stationary.

[3 marks]

4.5.1.3 Gravity

Question 27 · continued

0 8 . 2 When the brick from **Figure 14** is at the bottom of the pool, the top surface of the brick is 2.50 m below the surface of the water.

The force acting on the top surface of the brick due to the weight of the water is 637 N.

gravitational field strength = 9.8 N/kg

Calculate the density of the water in the swimming pool.

Use the Physics Equations Sheet.

[6 marks]

Density of water = _____ kg/m^3

Question 8 continues on the next page

Question 27 · continued

0 8 . 3 Professional divers are trained in a very deep swimming pool.

The density of the water in this pool is **not** the same as the density of the water in Question **08.2**

The diving brick was dropped into the very deep swimming pool.

When the brick was at a depth of 2.50 m, the force due to the weight of the water on the top surface of the brick was 618 N.

Figure 15 shows the diving brick at the bottom of the very deep swimming pool.

Figure 15

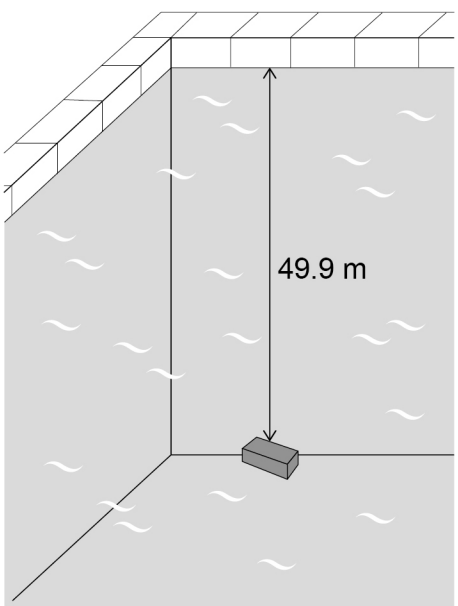

4.5.1.3 Gravity

Question 27 · continued

Determine the force due to the weight of the water on the top surface of the brick in **Figure 15**.

Use the Physics Equations Sheet.

Give your answer to 3 significant figures.

[3 marks]

Force (3 significant figures) = _____ N

12

4.5.1.3 Gravity

Question 28

June 2023 | 8463/1H | Original Q4

0 4 A remote village in the UK uses a hydroelectric generator to provide electricity.

0 4 . 1 In one day, 2 500 000 kg of water passes through the hydroelectric generator.

The change in gravitational potential energy of the water is 367.5 MJ.

gravitational field strength = 9.8 N/kg

Calculate the mean change in vertical height of the water as it moves through the hydroelectric generator.

Use the Physics Equations Sheet.

[4 marks]

Mean change in vertical height = _____ m

4.5.1.3 Gravity

Question 28 · continued

0 4 . 2 The generator transfers 3.0 kW of electrical power.

Calculate the time taken for the generator to transfer 2.16×10^7 J of energy.

Use the Physics Equations Sheet.

Give your answer in standard form.

[5 marks]

Time taken (in standard form) = _____ s

Question 4 continues on the next page

Question 28 · continued

0 4 . 3 **Figure 5** shows how the power output of the generator varied during one year.

Figure 5

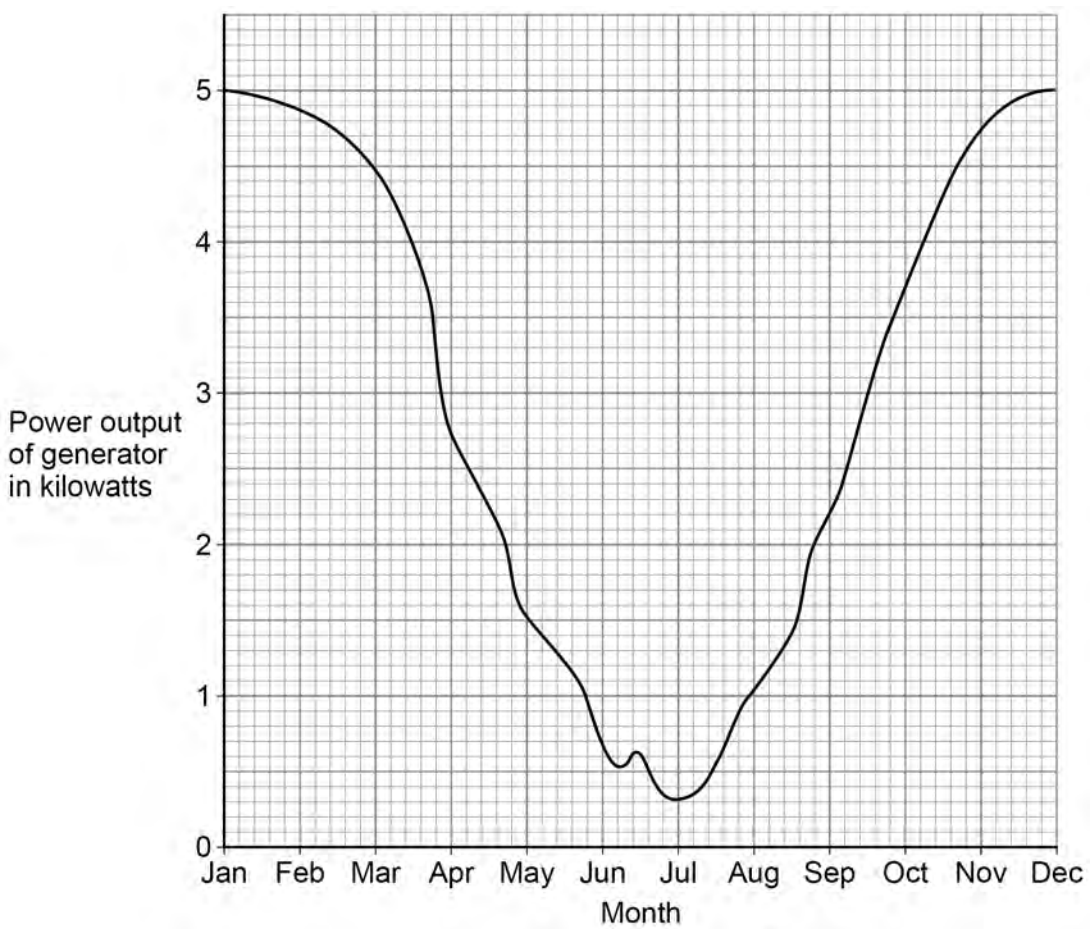

A solar power system is installed in the remote village in addition to the hydroelectric generator.

Explain why this improves the reliability of the electricity supply to the village.

Use information from **Figure 5**.

[2 marks]

11

4.5.1.3 Gravity

Question 29

June 2024 | 8463/1H | Original Q6

0 6 In a ride at a theme park, a person is strapped into a pod that is attached to two stretched bungee cords.

The bungee cords behave like springs.

Figure 10 shows a person using the ride.

Figure 10

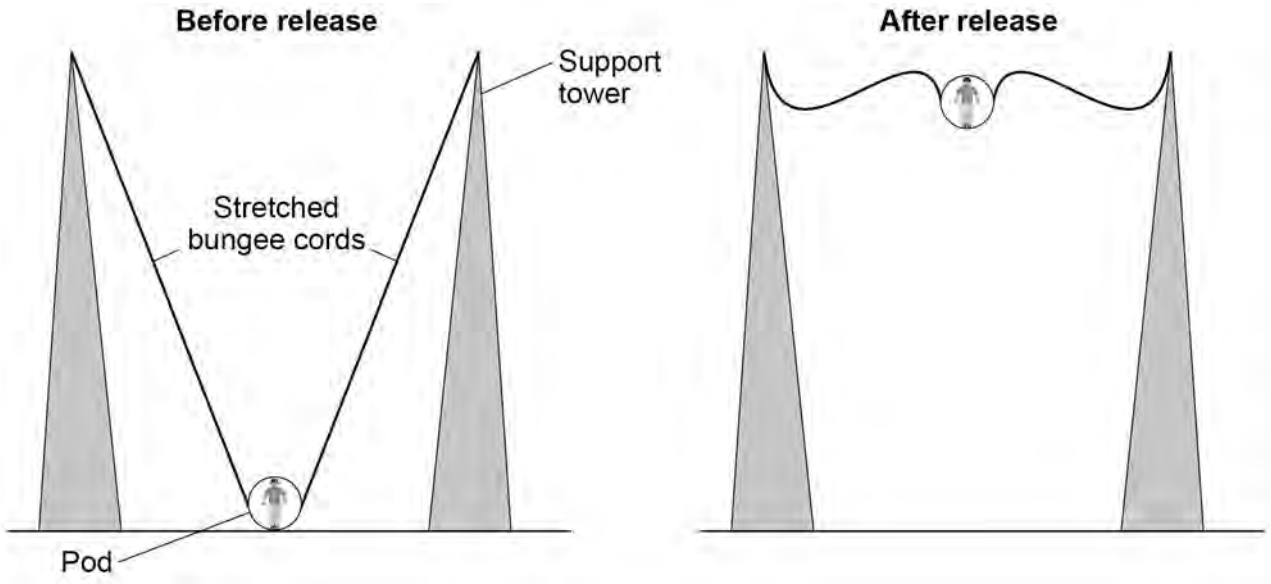

0 6 . 1 Which energy store increases as the bungee cords are stretched?

[1 mark]

4.5.1.3 Gravity

Question 29 · continued

0 6 . 2 When the pod is released, the pod accelerates upwards.

Before the pod is released the extension of **each** of the two bungee cords is 8.0 m.

The spring constant of each bungee cord is 735 N/m.

The mass of the pod is 240 kg.

gravitational field strength = 9.8 N/kg

Calculate the maximum height reached by the pod.

Use the Physics Equations Sheet.

[6 marks]

Maximum height = _____ m

0 6 . 3 The actual maximum height reached by the pod will be lower than the correct answer to Question **06.2**

Explain why.

[2 marks]

9

4.5.1.3 Gravity

Question 30

June 2024 | 8463/2H | Original Q4

0 4 The Mariana Trench is the deepest part of the Pacific Ocean.

Figure 8 shows a submarine going to the bottom of the Mariana Trench.

Figure 8

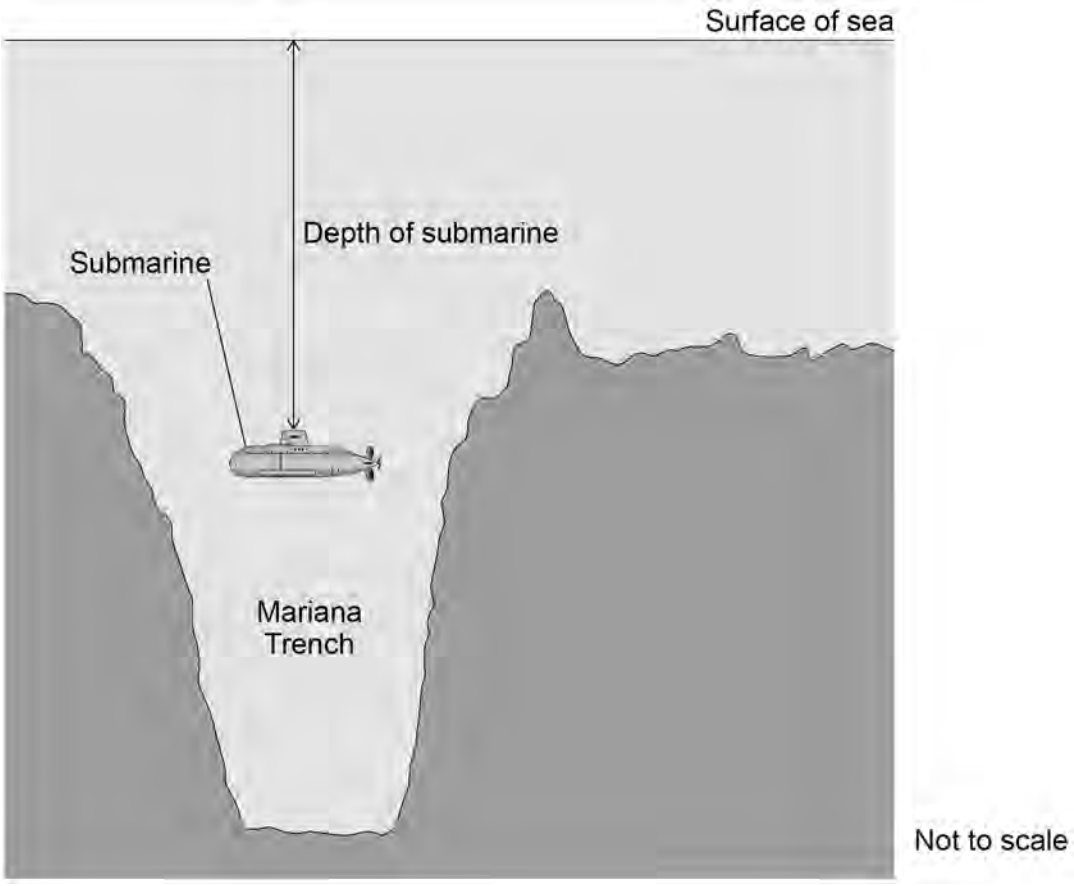

0 4 . 1 The depth of the submarine increases.

Explain what happens to the pressure on the submarine.

[2 marks]

4.5.1.3 Gravity

Question 30 · continued

0 4 . 2 The submarine moved from the surface of the water to the bottom of the Mariana Trench.

The change in pressure was 110 000 kPa.

mean density of sea water = 1026 kg/m^3

gravitational field strength = 9.8 N/kg

Calculate the depth of the Mariana Trench.

Use the Physics Equations Sheet.

[4 marks]

Depth = _____ m

Question 4 continues on the next page

4.5.1.3 Gravity

Question 30 · continued

Earthquakes often occur at the Mariana Trench.

P-waves and S-waves are produced by earthquakes.

0 4 . 3 Which statement describes P-waves and S-waves?

[1 mark]

Tick (✓) **one** box.

- Both P-waves and S-waves are longitudinal. ☐
- Both P-waves and S-waves are transverse. ☐
- P-waves are longitudinal and S-waves are transverse. ☐
- P-waves are transverse and S-waves are longitudinal. ☐

0 4 . 4 **Figure 9** shows the layers inside the Earth.

An earthquake occurs at the position shown.

Figure 9

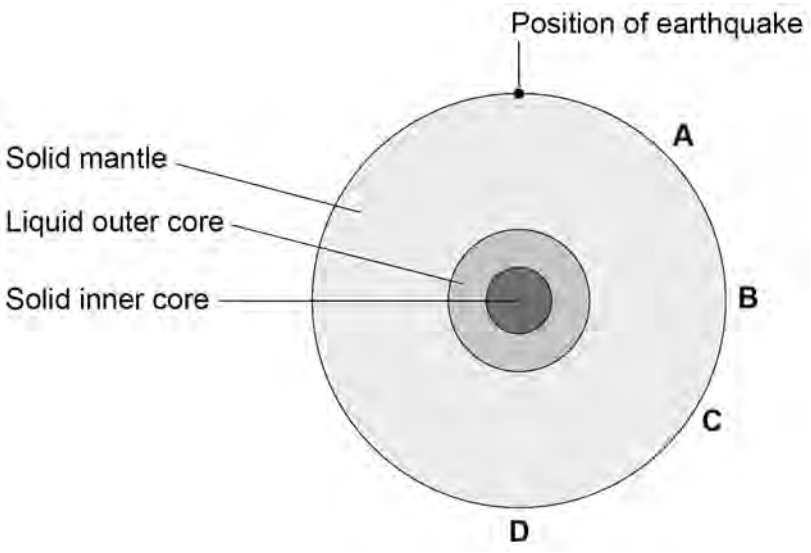

Which letter shows the position where **only** P-waves will be detected?

Give a reason for your answer.

[2 marks]

Tick (✓) **one** box.

A ☐ **B** ☐ **C** ☐ **D** ☐

Reason _____

_____

Question 4 continues on the next page

Question 30 · continued

0 4 . 5 An S-wave has a frequency of 3.6 Hz.

The S-wave has a speed of 4.5 km/s.

Calculate the wavelength of this S-wave.

Use the Physics Equations Sheet.

[3 marks]

Wavelength = _____ m

0 4 . 6 A seismometer is a device that detects earthquakes.

P-waves travel at a known speed between an earthquake and a seismometer.

S-waves travel at a slower speed than P-waves.

A P-wave and an S-wave from the earthquake arrive at the seismometer at different times.

Describe the relationship between the distance from the earthquake to the seismometer and the time between the P-wave and the S-wave arriving.

[2 marks]

14

4.5.1.3 Gravity

Question 31

June 2025 | 8463/1H | Original Q9

0 9 **Figure 11** shows a garden water feature.

Figure 11

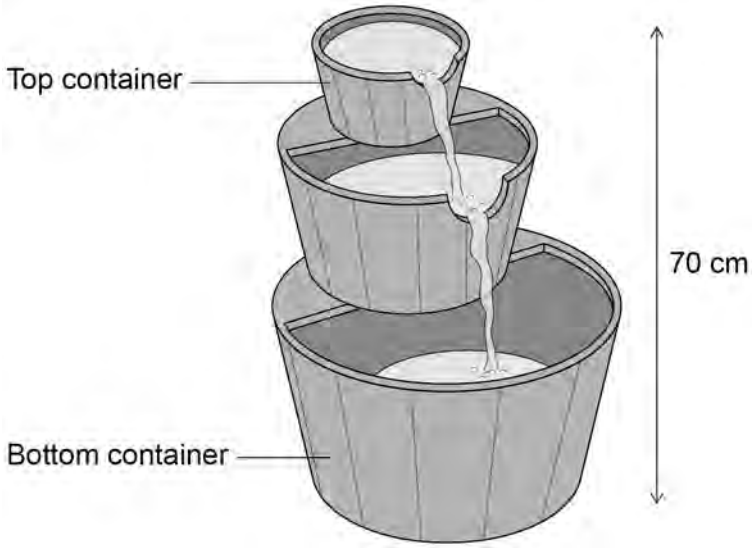

The water feature has an electric motor that pumps water from the bottom container to the top container.

0 9 . 1 The pump transfers 0.343 J of gravitational potential energy to the water each second.

gravitational field strength = 9.8 N/kg

Determine the mass of water passing through the pump each second.

Use the Physics Equations Sheet.

[4 marks]

Mass = _____ kg

4.5.1.3 Gravity

Question 31 · continued

0 9 . 2 The power of the pump motor is 4.86 W.

The resistance of the pump motor is 6.0 Ω.

Calculate the charge flow through the motor in 30 minutes.

Use the Physics Equations Sheet.

[6 marks]

Charge flow = _____ C

0 9 . 3 The pump motor breaks and is replaced with a new motor.

The new pump motor has the same power input, but has a greater efficiency.

Explain how the new pump motor would affect the flow of water in the water feature.

[2 marks]

12