AQA GCSE Physics | 8463

SPECIFICATION POINT 4.2.5.1

# Static charge

## Past-paper questions

| | |
|---|---|
| Tier | **Higher** |
| Question groups | **11** |
| Available paper years | **2008–2024** |

## Using this booklet

1. Answer the questions in order and show your working.
2. Original question numbers and marks are retained.
3. Print at actual size (100%) for measuring questions.
4. Use the companion answer booklet to check your work.

**Name:** _____ **Date:** _____

Whole questions are retained for context, so some parts assess other specification points. Current and legacy sources are labelled. Continue on extra paper if needed.

**4.2.5.1 Static charge**

**Question 01**

January 2008 | PHY2H | Original Q2 | Legacy

**2** During car journeys, the driver will often become electrostatically charged. This is more noticeable on dry days than on damp, humid days.

(a) Explain what happens to cause the driver to become charged.

.....

.....

.....

.....

*(2 marks)*

(b) Scientists were asked to find out if the build up of charge on the driver depends on the type of material the driver's clothes are made from. The results of the investigation are given in the table.

| Material | Humidity | Temperature in °C | Charge on the driver in millicoulombs |
|---|---|---|---|
| Nylon | 48 % | 18 | 3.0 to 3.2 |
| Wool | 48 % | 18 | 2.4 to 2.5 |
| Cotton | 48 % | 18 | 1.4 to 1.7 |

Humidity is a measure of how much water vapour the air can hold.

(i) Why was it important that the scientists controlled the humidity?

.....

.....

*(1 mark)*

(ii) Does the data in the table show that the charge on the driver would always be less if they were to wear cotton clothing?

Give a reason for your answer.

.....

.....

*(1 mark)*

4

**4.2.5.1 Static charge**

**Question 02**

June 2008 | PHY2H | Original Q6 | Legacy

**6** Static electricity can be both useful and a nuisance.

**6** (a) The diagram shows a method of producing sandpaper using static electricity.

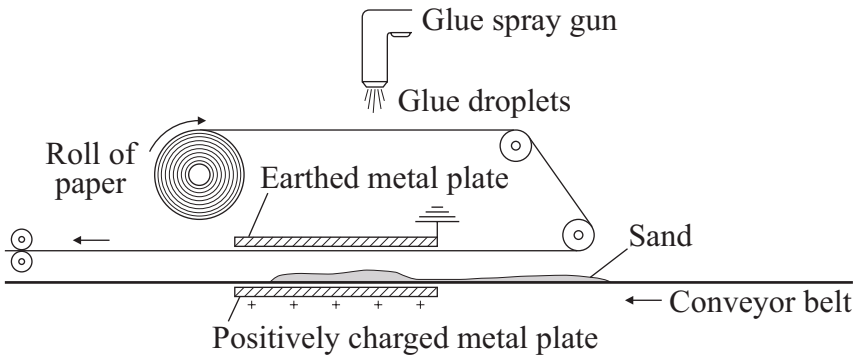


Glue is sprayed onto a moving strip of paper. As the glue leaves the spray gun, the glue breaks up into tiny negatively charged droplets which coat the paper. The sticky paper passes between two metal plates. Sand moving on a conveyor belt also passes between the metal plates.

**6** (a) (i) Explain the advantage of having all the droplets of glue negatively charged.

.....

.....

.....

.....

*(2 marks)*

**6** (a) (ii) Explain why the sand moves towards the sticky paper.

.....

.....

.....

.....

*(2 marks)*

**Question 6 continues on the next page**

**4.2.5.1 Static charge**

**Question 02 · continued**



*for mark*

**6** (b) People often experience an electric shock when getting out of a car.
This happens because charge is generated as they move around on the car seats.

On a warm dry day, the potential difference between a driver and the car increases to 10 000 volts. As the driver goes to touch the car door, a spark jumps the air gap, transferring 20 joules of energy between the driver and the car.

Use the equation in the box to calculate the initial charge on the driver.

| energy transformed = potential difference × charge |
|---|

Show clearly how you work out your answer and give the unit.

.....

.....

Charge = .....

*(3 marks)*

7

### 4.2.5.1 Static charge

**Question 03**

January 2009 | PHY2H | Original Q4 | Legacy

**4** (a) Burning coal produces soot, ash and waste gases.
The diagram shows an electrostatic precipitator used to separate the particles of soot and ash from the waste gases.

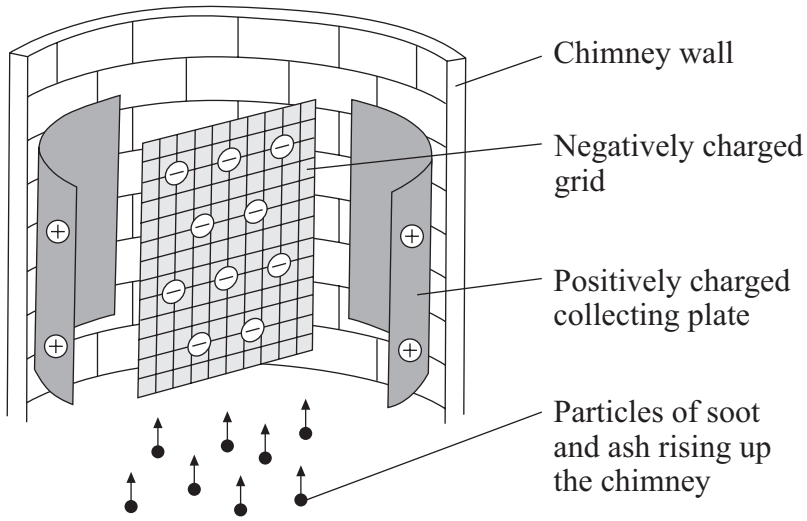


Explain how the electrostatic precipitator separates the particles of soot and ash from the waste gases.

.....

.....

.....

.....

.....

.....

*(3 marks)*

**4.2.5.1 Static charge**

**Question 03 · continued**



*for mark*

**4** (b) The diagram shows a Van de Graaff generator. When the generator is switched on, the metal dome becomes negatively charged.

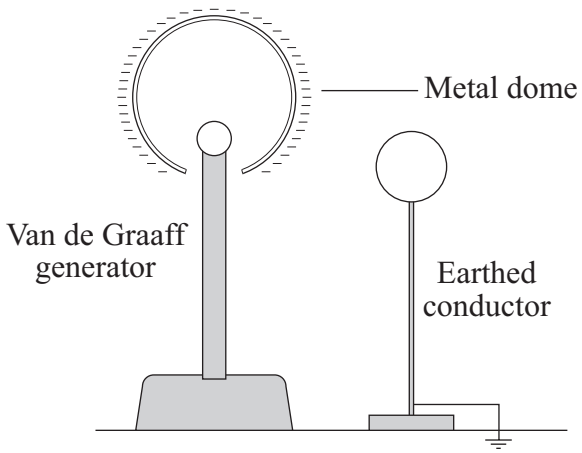


Explain what must happen to cause a spark to jump from the dome of the generator to an earthed conductor nearby.

.....

.....

.....

.....

*(2 marks)*

5

### 4.2.5.1 Static charge

**Question 04**

June 2009 | PHY2H | Original Q2 | Legacy

**2** (a) A plastic ruler is rubbed with a cloth.

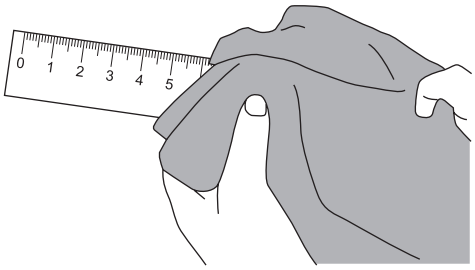


The ruler becomes negatively charged.

**2** (a) (i) Complete the following sentence by drawing a ring around the correct line in the box.

The ruler becomes negatively charged because it has

| |
|---|
| gained electrons |
| lost neutrons |
| lost protons |

.

*(1 mark)*

**2** (a) (ii) How could you show that the ruler is charged?

.....

.....

*(1 mark)*

Question 04 · continued



*for mark*

**2** (b) People often become electrostatically charged as they get out of a car.
This happens because their clothing rubs against the car seat.

A scientist was asked to find out whether the amount of charge on a person depended on the type of material which covered the car seat.
Three people, **A**, **B** and **C**, were used to test three different types of seat covering.

In each test, the person got out of the car and stood on a thick sheet of plastic.
The scientist then measured the potential difference between the person and the car body.
The results of the investigation are displayed in the bar chart.

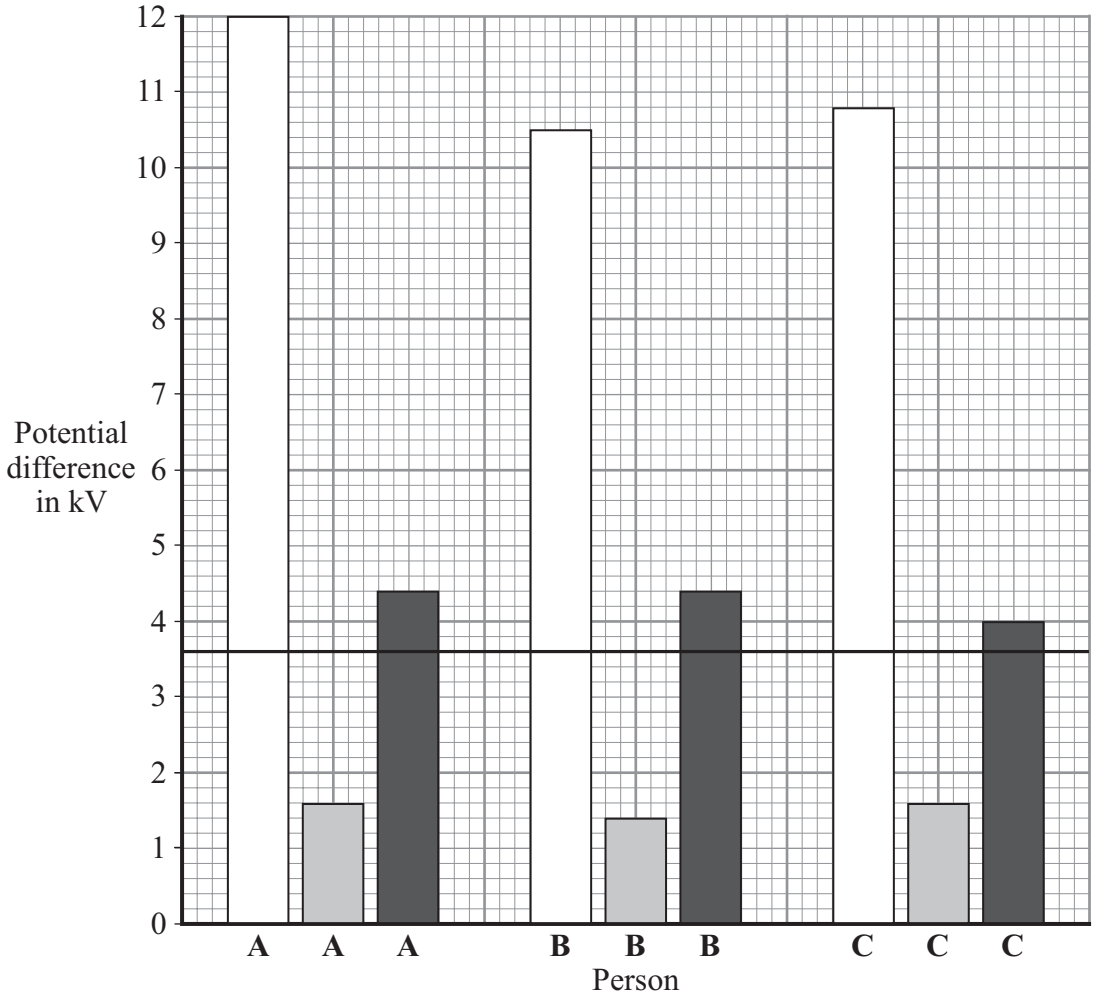


**Question 2 continues on the next page**

**4.2.5.1 Static charge**

**Question 04 · continued**



*for mark*

**2** (b) (i) Explain why the measurement was made with the person standing on a thick sheet of plastic.

.....

.....

.....

.....

*(2 marks)*

**2** (b) (ii) To make this a fair test, the three people, **A**, **B** and **C**, each wore the same type of clothing.

Suggest a reason why this was important.

.....

.....

*(1 mark)*

**2** (b) (iii) The smallest scale division on the voltmeter was 0.1 kV.

Suggest why, from the data, it was **not** necessary to increase the precision of the potential difference measurements.

.....

.....

*(1 mark)*

**2** (b) (iv) Explain why this investigation may cause a manufacturer to change the material used to cover car seats.

.....

.....

.....

.....

*(2 marks)*

**8**

### 4.2.5.1 Static charge

**Question 05**

June 2010 | PHY2H | Original Q3 | Legacy

**3 (a)** When a glass rod is rubbed with a woollen cloth, the rod becomes positively charged.

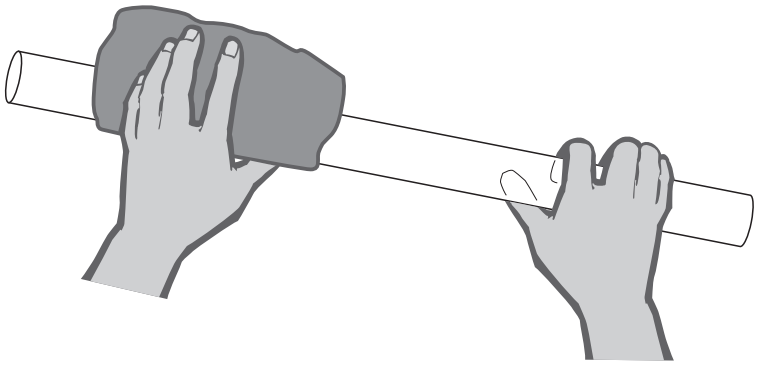

**3 (a) (i)** Explain why the glass becomes positively charged.

.....

.....

.....

.....

*(2 marks)*

**3 (a) (ii)** A glass TV screen, polished with a dry cloth on a dry day, soon becomes dusty again.

Explain why.

.....

.....

.....

.....

*(2 marks)*

**Question 3 continues on the next page**

4.2.5.1 Static charge

Question 05 · continued



**3 (b)** Many devices use electrostatic charge to work.
The following sentences describe how a photocopier works using electrostatic charge.
The sentences are in the wrong order.

**J** A strong light is used to form an image of the page to be copied on the roller.

**K** The charged areas of the roller attract particles of black toner powder.

**L** The charge left on the roller has the same pattern as the dark parts of the original page.

**M** The toner melts and sticks to the paper. This is now a photocopy of the original.

**N** A roller coated with a photoconducting material is given a charge.

**O** Where light hits the roller, the charge leaks away.

**P** A blank piece of paper is heated and pressed against the roller.

**3 (b) (i)** Arrange the sentences in the correct order.
Three of the sentences have been put into the correct places.

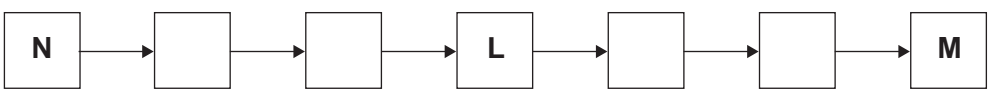


*(3 marks)*

**3 (b) (ii)** Why is it important that the blank piece of paper is heated?

.....

.....

*(1 mark)*

8

### 4.2.5.1 Static charge

**Question 06**

January 2011 | PHY2H | Original Q2 | Legacy

**2 (a)** The diagram shows a negatively charged plastic rod held close to a thin stream of water. The water is attracted towards the rod.

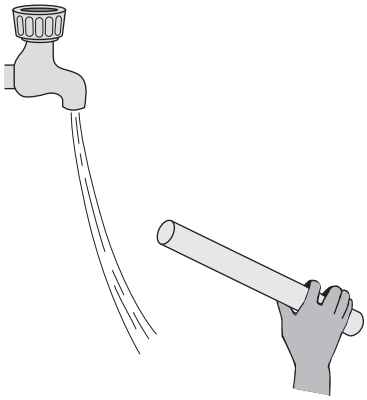

Which **one** of the following statements explains what is happening to the charge in the water?

Tick (✓) **one** box.

The positive and the negative charges in the water are attracted to the rod. ☐

The positive and the negative charges in the water are repelled by the rod. ☐

The negative charge in the water is repelled by the rod and the positive charge is attracted. ☐

The negative charge in the water is attracted by the rod and the positive charge is repelled. ☐

*(1 mark)*

4.2.5.1 Static charge

Question 06 · continued



**2 (b)** A company that produces bottles of mouthwash found a problem with the automatic filling system.

As the bottles go towards the filler, they move around on the conveyer belt and become electrostatically charged. This causes the stream of mouthwash to move sideways, missing the open top of the bottle.

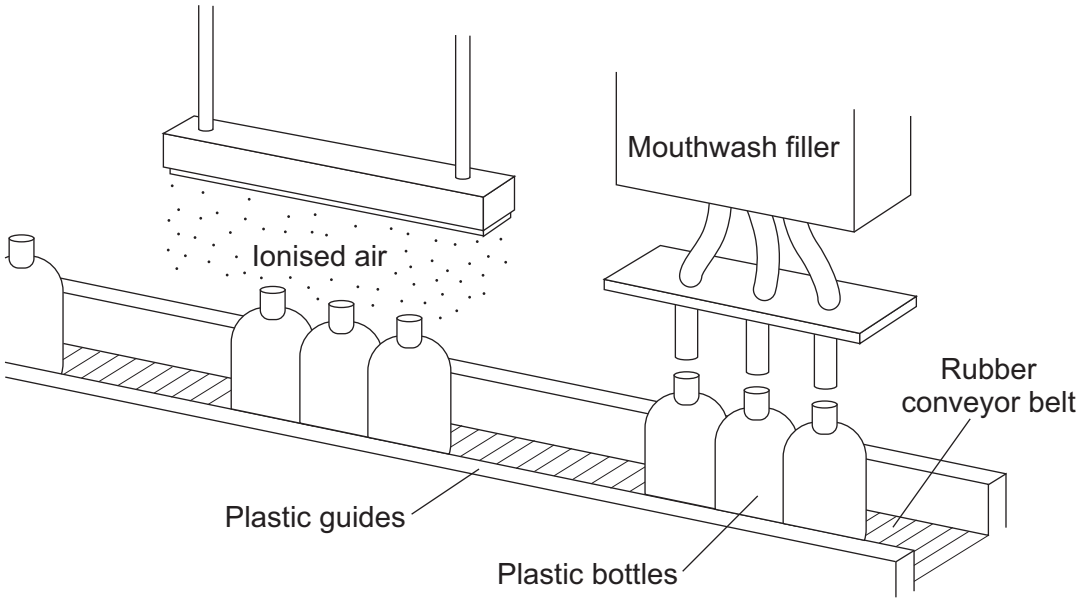


The company came up with a solution to the problem. Before the bottles reach the filler, they pass through a stream of ionised air. The ions in the air neutralise the charge on the bottles.

**2 (b) (i)** Explain why the plastic bottles become charged.

.....

.....

.....

.....

*(2 marks)*

**Question 2 continues on the next page**

4.2.5.1 Static charge

Question 06 · continued



**2 (b) (ii)** What is an ion?

.....

.....

*(1 mark)*

**2 (b) (iii)** Earthing the conveyor belt with a conducting wire would not have solved this problem.

Give a reason why.

.....

.....

*(1 mark)*

5

### 4.2.5.1 Static charge

**Question 07**

June 2017 | PH2HP | Original Q6 | Legacy

**6** When two different materials listed in **Table 2** are rubbed together they become electrostatically charged. The polarity of the material that is higher in **Table 2** would become positive.

**Table 2**

| |
|---|
| glass |
| nylon |
| wool |
| silk |
| polyester |
| PVC |

**6 (a)** **Figure 7** shows a nylon rod being rubbed with a silk cloth.

**Figure 7**

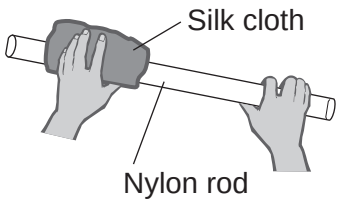


**6 (a) (i)** Explain why both materials become electrostatically charged.
Include in your answer the polarity of each material.

**[3 marks]**

Question 07 · continued



**6 (a) (ii)** What difference would it have made if a PVC rod had been rubbed with the silk cloth rather than a nylon rod?

**[1 mark]**

**6 (b)** The charged nylon rod is put onto an electric balance.

**Figure 8**

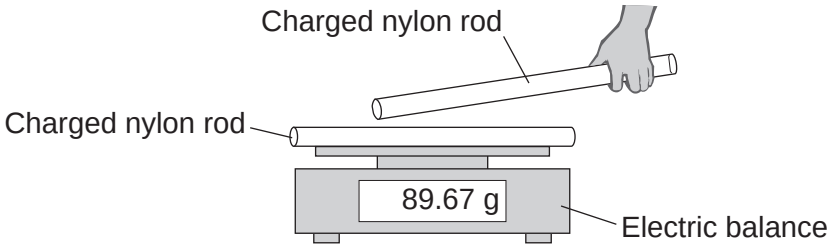


A second identically charged nylon rod is moved towards the rod on the balance, as shown in **Figure 8**.

What will happen to the reading on the balance as the two rods get closer to each other?

The rods do not touch or discharge.

**[3 marks]**

Tick (✓) **one** box.

The reading will decrease. ☐

The reading will not change. ☐

The reading will increase. ☐

Explain the reason for your answer.

**Question 6 continues on the next page**

4.2.5.1 Static charge

Question 07 · continued



**6 (c)** A driver often becomes electrostatically charged when in a car. This happens because the driver's clothing rubs against the car seat.

**6 (c) (i)** The charge on a driver who has just got out of his car is $3.0 \times 10^{-3}$ coulombs. When the driver starts to close the car door a spark jumps across the air gap between the driver and the door. The spark transfers 27 joules of energy.

Calculate the potential difference between the driver and the car as the driver starts to close the door.

Use the correct equation from the Physics Equations Sheet.

**[2 marks]**

Potential difference = _____ volts

**6 (c) (ii)** A scientist investigated how the charge on a driver changed when the driver wore clothes made from different materials. The results from the investigation are given in **Table 3**.

**Table 3**

| Type of material | Charge on the driver $\times 10^{-3}$ coulombs |
|---|---|
| cotton | 1.4 to 1.7 |
| wool | 2.4 to 2.5 |
| polyester | 3.5 to 3.8 |

A student looked at the data in **Table 3** and concluded:

'The charge on a driver will always be less if the driver wears clothes made from cotton rather than any other type of material.'

Suggest **two** reasons why this may **not** be a valid conclusion.

**[2 marks]**

1 _____

2 _____

11

4.2.5.1 Static charge

Question 08

June 2019 | 8463/1H | Original Q10

**1 0** **Figure 12** shows a student after rubbing a balloon on his hair.

The balloon and hair have become charged.

**Figure 12**

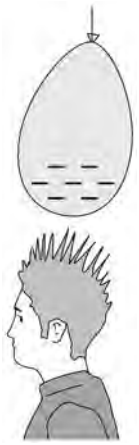

**1 0 . 1** Describe the force that acts on the student's hair in **Figure 12**.

**[2 marks]**

**1 0 . 2** An earthed conductor was brought near the charged student.
A spark jumped between the conductor and the student.

The potential difference between the conductor and the student was 2.5 kV
The energy transferred by the spark was 0.0050 J

Calculate the charge transferred by the spark.

**[3 marks]**

Charge = _____ C

4.2.5.1 Static charge

Question 08 · continued



**1 0 . 3** A defibrillator can transfer a charge to regulate a person's heartbeat.

**Figure 13** shows a defibrillator.

**Figure 13**




When the defibrillator is in use, a potential difference of 4800 V is applied across the person's chest.

A charge of 0.16 coulombs passes through the person's chest in 4.0 ms

Calculate the resistance of the person's chest.

**[5 marks]**

Resistance = _____ Ω

10

4.2.5.1 Static charge

Question 09



**0 1** A student investigated the acceleration of a trolley.

**Figure 1** shows how the student set up the apparatus.

**Figure 1**

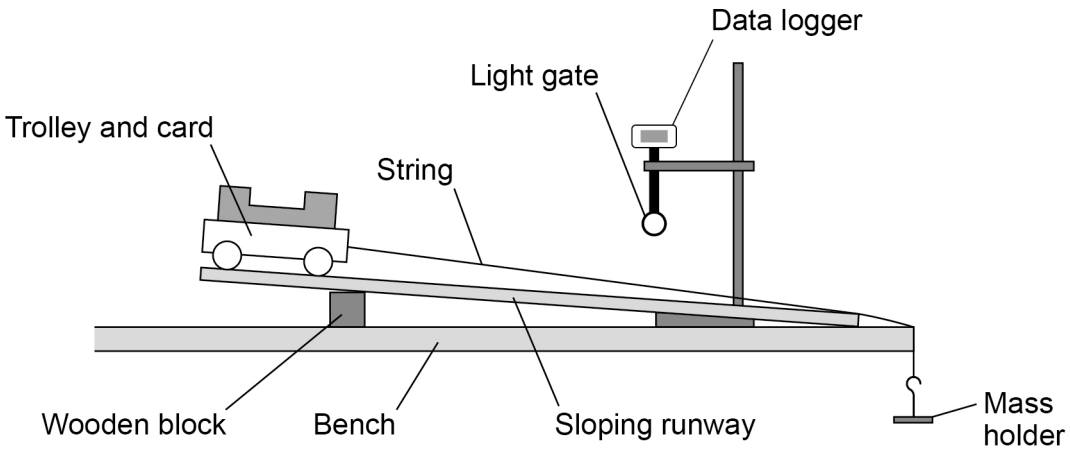


**0 1 . 1** Before attaching the mass holder the student placed the trolley at the top of the runway. The trolley rolled down the runway without being pushed.

What change to the apparatus in **Figure 1** could be made to prevent the trolley from starting to roll down the runway?

**[1 mark]**

Tick (✓) **one** box.

Move the wooden block to the left. ☐

Shorten the length of the runway. ☐

Use a taller wooden block. ☐

**0 1 . 2** The student attached the mass holder to the string.

The string rubbed along the edge of the bench as the mass holder fell to the floor.

Suggest what the student could do to prevent the string from rubbing.

**[1 mark]**

Question 09 · continued



The light gate and data logger were used to determine the acceleration of the trolley.

The student increased the resultant force on the trolley and recorded the acceleration of the trolley.

**Table 1** shows the results.

**Table 1**

| Resultant force in newtons | Acceleration in m/s$^2$ |
|---|---|
| 0.05 | 0.08 |
| 0.10 | 0.18 |
| 0.15 | 0.25 |
| 0.20 | 0.32 |
| 0.25 | 0.41 |

**Figure 2** is an incomplete graph of the results.

**Figure 2**

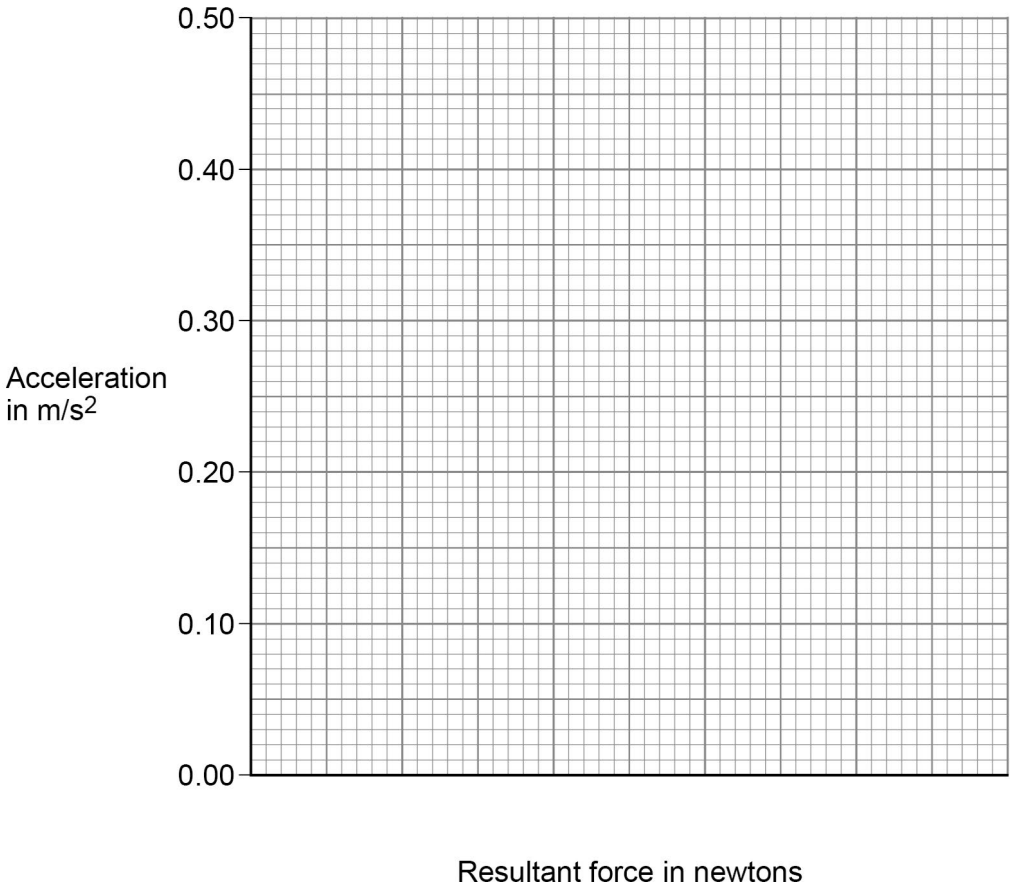


**0 1 . 3** Complete **Figure 2**.

- Choose a suitable scale for the x-axis.
- Plot the results.
- Draw a line of best fit.

**[4 marks]**

4.2.5.1 Static charge

Question 09 · continued



**0 1 . 4** Describe the relationship between the resultant force on the trolley and the acceleration of the trolley.

**[1 mark]**

**0 1 . 5** Describe how the investigation could be improved to reduce the effect of random errors.

**[2 marks]**

**0 1 . 6** Write down the equation that links acceleration (*a*), mass (*m*) and resultant force (*F*).

**[1 mark]**

**0 1 . 7** The resultant force on the trolley was 0.375 N.

The mass of the trolley was 0.60 kg.

Calculate the acceleration of the trolley.

Give your answer to 2 significant figures.

**[4 marks]**

Acceleration (2 significant figures) = _____ $m/s^2$

14

4.2.5.1 Static charge

Question 10

June 2022 | 8463/1H | Original Q5

**0 5** A student rubbed a plastic rod with a cloth.

The rod became negatively charged and the cloth became positively charged.

**0 5 . 1** Explain why the cloth became positively charged.

**[3 marks]**

**Figure 6** shows the negatively charged rod on a balance.

**Figure 6**

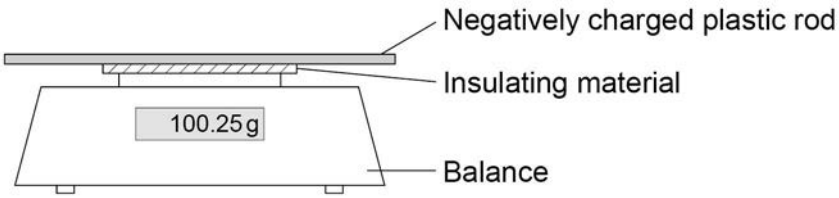


**Figure 7** shows another charged rod being held stationary above the rod on the balance.

The rods do not touch each other.

**Figure 7**

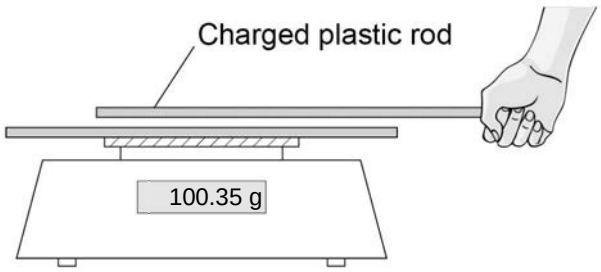

4.2.5.1 Static charge

Question 10 · continued



**0 5 . 2** Explain why the reading on the balance increases.

**[3 marks]**

**0 5 . 3** The balance had a zero error.

The zero error is not important in this experiment.

Give the reason why.

**[1 mark]**

**0 5 . 4** A negatively charged rod is held near an earthed conductor.

Explain why a spark jumps between the negatively charged rod and the earthed conductor.

**[3 marks]**

**10**

4.2.5.1 Static charge

Question 11

June 2024 | 8463/1H | Original Q4

**0 4** **Figure 4** shows a static electricity generator.

**Figure 4**

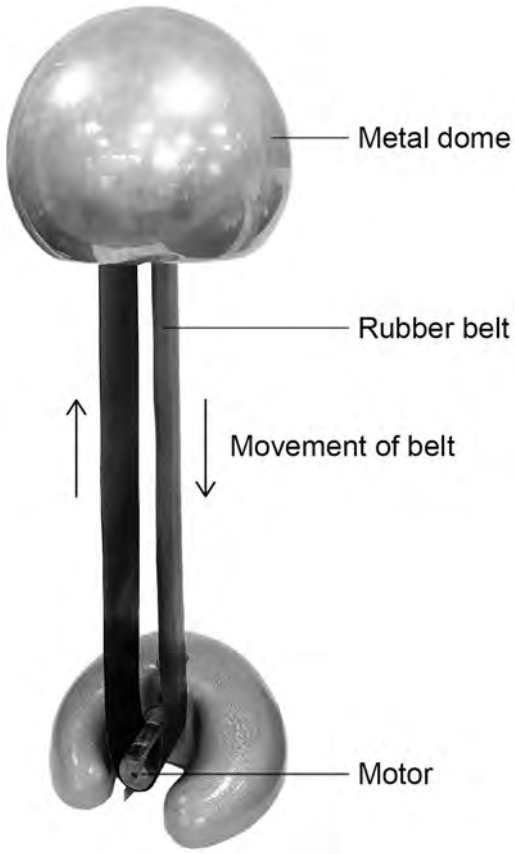


The rubber belt is turned by a motor.

As the rubber belt moves, charge is transferred from the rubber belt to the metal dome.

**Question 4 continues on the next page**

4.2.5.1 Static charge

Question 11 · continued



**0 4 . 1** **Figure 5** shows a student touching the metal dome of the static electricity generator.

The dome is negatively charged.

**Figure 5**



Explain why the student's hair stands up on end.

**[3 marks]**

4.2.5.1 Static charge

Question 11 · continued



The charged metal dome creates an electric field.

**0 4 . 2** What is an electric field?

**[1 mark]**

**0 4 . 3** How does the electric field strength vary as the distance from the charged metal dome increases?

**[1 mark]**

**Question 4 continues on the next page**

4.2.5.1 Static charge

Question 11 · continued



**Figure 6** shows the negatively charged metal dome and an earthed conductor.

**Figure 6**

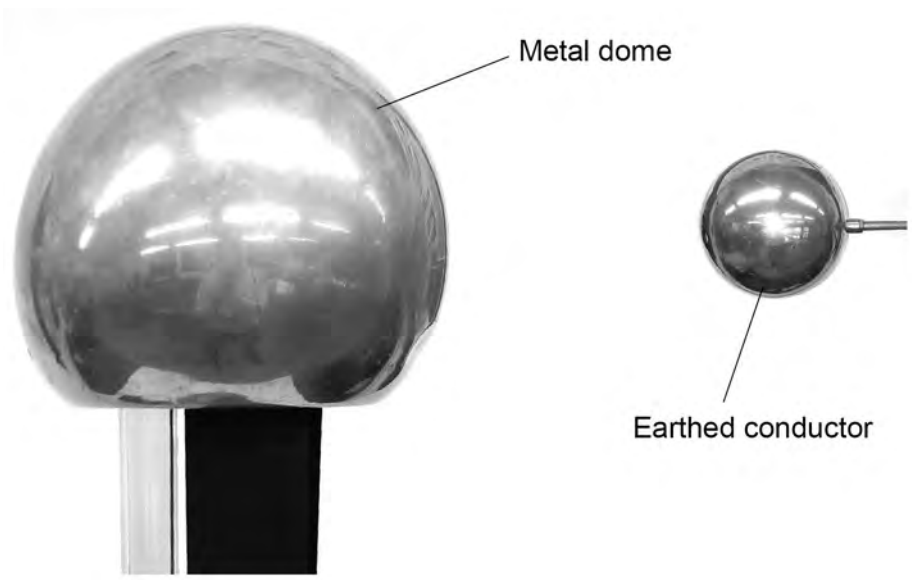


When the earthed conductor is moved towards the metal dome, there is a spark between the dome and the earthed conductor.

**0 4 . 4** The spark transfers 0.60 J of energy, and 2.0 μC of charge is transferred from the dome to the earthed conductor.

Calculate the potential difference between the metal dome and the earthed conductor.

Use the Physics Equations Sheet.

**[4 marks]**

Potential difference = _____ V

4.2.5.1 Static charge

Question 11 · continued



**0 4 . 5** Which of the following changes would increase the distance a spark can jump between the dome and the earthed conductor?

**[1 mark]**

Tick (✓) **one** box.

- Decreased charge on the metal dome ☐
- Decreased electric field strength ☐
- Decreased electrical resistance of air ☐
- Decreased potential difference ☐

10

**Turn over for the next question**