AQA GCSE Physics | 8463

SPECIFICATION POINT 4.2.3.1

Direct and alternating potential difference

Past-paper questions

Tier	**Higher**
Question groups	**28**
Available paper years	**2004–2025**

Using this booklet

1. Answer the questions in order and show your working.
2. Original question numbers and marks are retained.
3. Print at actual size (100%) for measuring questions.
4. Use the companion answer booklet to check your work.

Name: _____ **Date:** _____

Whole questions are retained for context, so some parts assess other specification points. Current and legacy sources are labelled. Continue on extra paper if needed.

4.2.3.1 Direct and alternating potential difference

Question 01

June 2004 | 3451H | Original Q11 | Legacy

11 (a) The diagram shows a simple generator. The trace on the oscilloscope shows that the generator produces an alternating current.

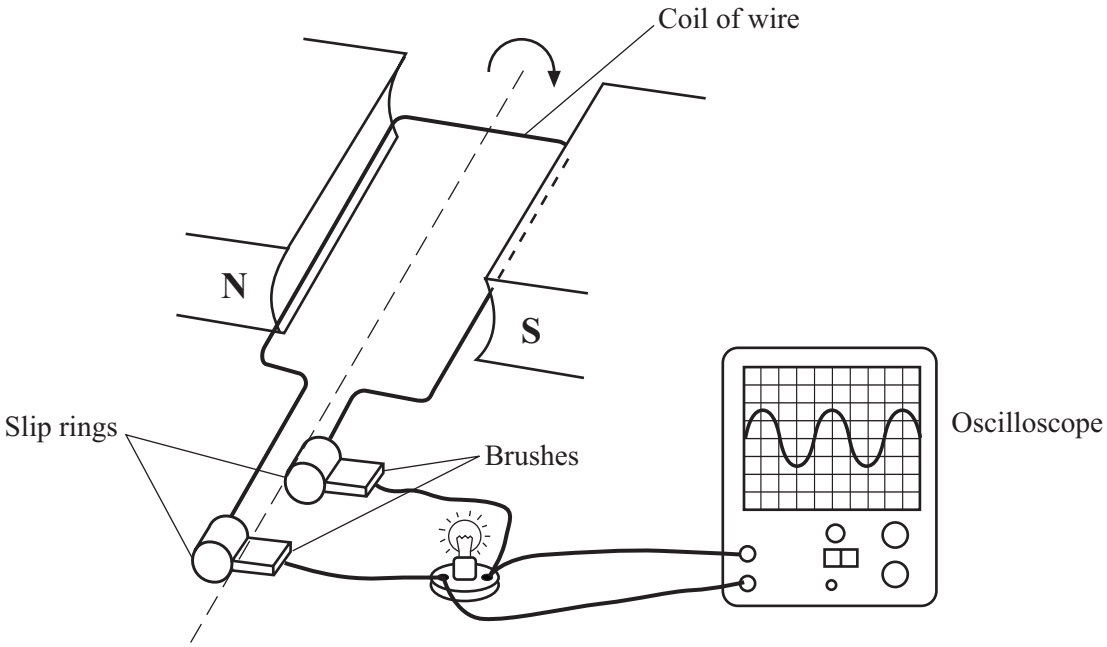

(i) Explain how the generator works. Include in your answer the reasons why the slip rings and brushes are needed.

.....

.....

.....

.....

.....

.....

.....

.....

(4 marks)

4.2.3.1 Direct and alternating potential difference

Question 01 · continued

June 2004 | 3451H | Original Q11 | Legacy

MARGIN BLANK

(ii) What should be done to make the generator give the oscilloscope trace drawn below? Assume the controls on the oscilloscope are unchanged.

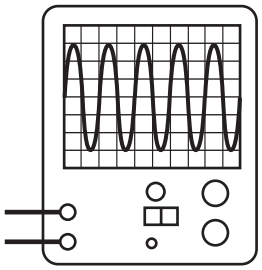

.....

.....

.....

.....

(2 marks)

(b) Explain why electricity is transmitted through the National Grid as alternating current (a.c.) rather than direct current (d.c.).

.....

.....

.....

.....

.....

.....

(3 marks)

9

4.2.3.1 Direct and alternating potential difference

Question 02

June 2004 | 3462H3 | Original Q9 | Legacy

9 (a) The diagram shows a simple generator. The trace on the oscilloscope shows that the generator produces an alternating current.

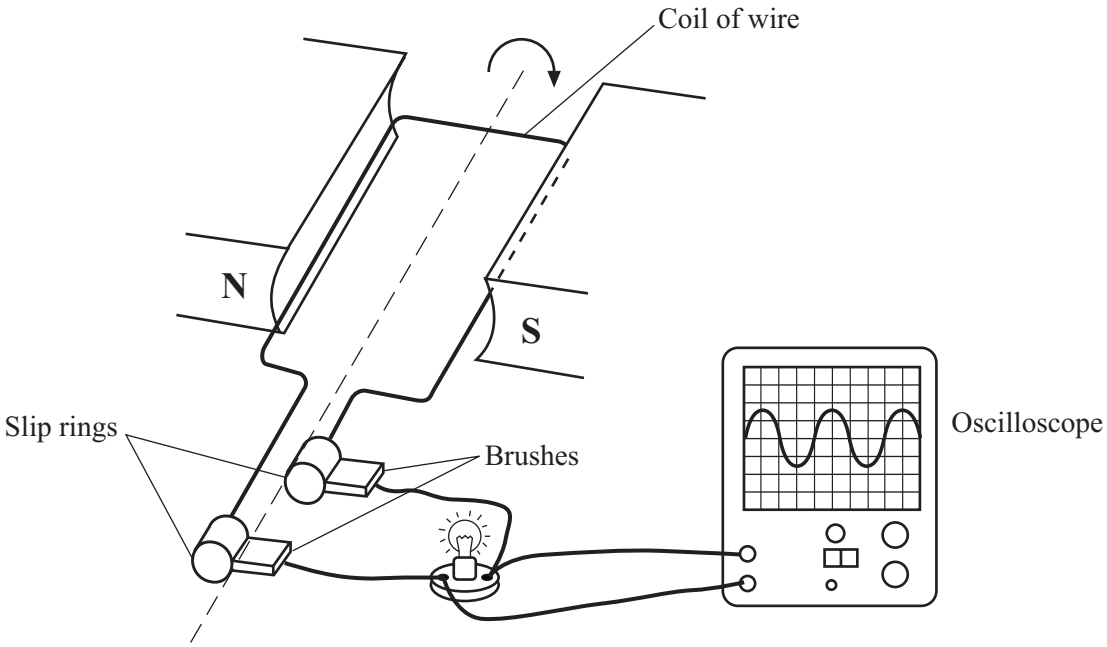

(i) Explain how the generator works. Include in your answer the reasons why the slip rings and brushes are needed.

.....

.....

.....

.....

.....

.....

.....

.....

(4 marks)

4.2.3.1 Direct and alternating potential difference

Question 02 · continued

MARGIN BLANK

(ii) What should be done to make the generator give the oscilloscope trace drawn below? Assume the controls on the oscilloscope are unchanged.

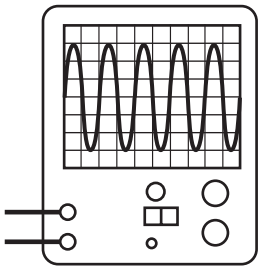

.....

.....

.....

.....

(2 marks)

(b) Explain why electricity is transmitted through the National Grid as alternating current (a.c.) rather than direct current (d.c.).

.....

.....

.....

.....

.....

.....

(3 marks)

9

4.2.3.1 Direct and alternating potential difference

Question 03

November 2006 | PHY1B | Original Q2 | Legacy

QUESTION TWO

Electromagnetic radiation is often absorbed.

Match words, **A**, **B**, **C** and **D**, with the numbers **1–4** in the sentences.

A current

B energy

C frequency

D substance

When electromagnetic radiation is absorbed, the . . . **1** . . . which absorbs it becomes hotter. This is because the radiation carries . . . **2** . . . . The radiation may create an alternating . . . **3** . . . with the same . . . **4** . . . as the radiation itself.

Turn over for the next question

4.2.3.1 Direct and alternating potential difference

Question 04

June 2007 | PHY1B | Original Q6 | Legacy

QUESTION SIX

When electromagnetic radiation is absorbed, the energy it carries makes the substance which absorbs it hotter and may create an alternating current of electricity.

6A When sunlight passes through a prism, a visible spectrum forms. A thermometer is moved slowly from **X** to **Y**.

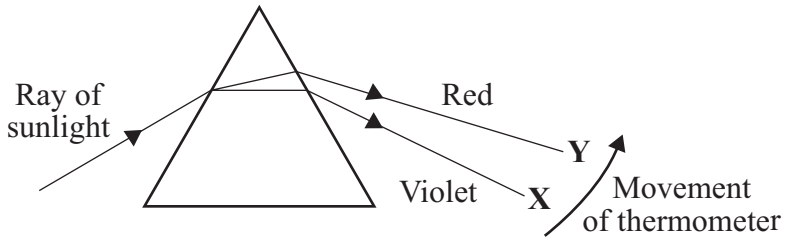

Which sketch graph shows the temperature change as the thermometer moves from **X** to **Y**?

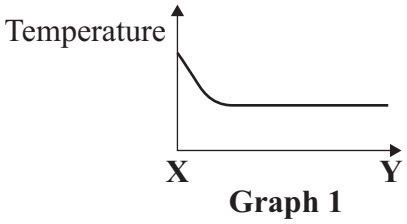

Graph 1

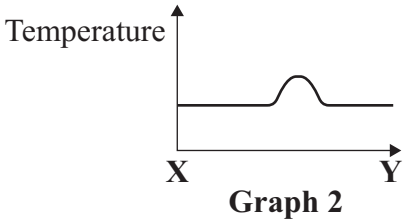

Graph 2

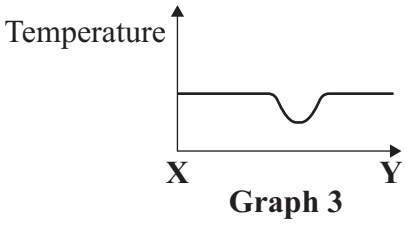

Graph 3

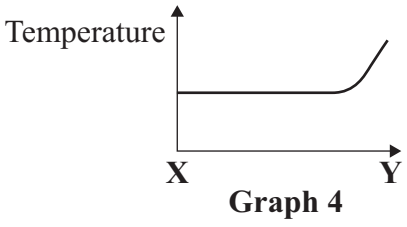

Graph 4

6B The absorption of electromagnetic radiation can create an alternating current in a wire.

This alternating current will have . . .

1 the same frequency as the electromagnetic radiation.

2 the same ionising power as the electromagnetic radiation.

3 the same speed as the electromagnetic radiation.

4 the same wavelength as the electromagnetic radiation.

4.2.3.1 Direct and alternating potential difference

Question 04 · continued

6C Which factors most affect the absorption of electromagnetic radiation by living cells?

1 speed and wavelength

2 speed, wavelength and size of dose

3 wavelength and size of dose

4 size of dose

6D During the solar eclipse of 2001, four students shared their observations.

Which student's observation was correct?

Student	Observation
1	"It went both cold and dark at the same time."
2	"It went cold, then it went dark."
3	"It went cold, then warm again, then dark."
4	"It went dark, then light again, then cold."

4.2.3.1 Direct and alternating potential difference

Question 05

January 2008 | PHY2H | Original Q3 | Legacy

3 The picture shows an advert for an electric mobility scooter.

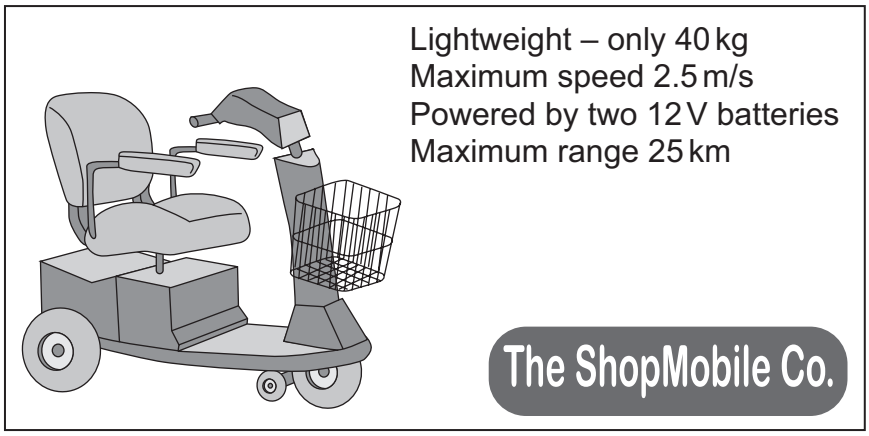

(a) The batteries are joined in series.

(i) What is the potential difference provided by the batteries to the motor?

.....

(1 mark)

(ii) The batteries supply a *direct current (d.c.)*.

What is a *direct current (d.c.)*?

.....

.....

(1 mark)

(b) At 2.5 m/s on flat ground, the motor takes a current of 3.0 A from the batteries.

(i) Explain why a bigger current is taken from the batteries when the scooter is going uphill at 2.5 m/s.

.....

.....

.....

.....

(2 marks)

4.2.3.1 Direct and alternating potential difference

Question 05 · continued

BLANK

(ii) What effect does travelling uphill have on the range of the scooter?

.....

(1 mark)

(c) The mass of the scooter driver is 80 kg.

Use the equation in the box to calculate the kinetic energy of the scooter **and** driver when they are travelling at maximum speed.

$$\text{kinetic energy} = \frac{1}{2} \times \text{mass} \times \text{speed}^2$$

Show clearly how you work out your answer.

.....

.....

Kinetic energy = ... J

(2 marks)

(d) A battery which has run down is recharged in 8 hours. The average current delivered by the battery charger is 1.5 A.

Use the equation in the box to calculate the maximum charge stored by **both** batteries.

$$\text{charge} = \text{current} \times \text{time}$$

Show clearly how you work out your answer and give the unit.

.....

.....

Charge stored = ...

(3 marks)

10

4.2.3.1 Direct and alternating potential difference

Question 06

January 2009 | PHY2H | Original Q5 | Legacy

5 (a) Describe the difference between an alternating current (a.c.) and a direct current (d.c.).

.....

.....

.....

.....

(2 marks)

5 (b) The diagram shows the information plate on the bottom of an electric wallpaper steamer.

230 V a.c.	50 Hz	2.3 kW

5 (b) (i) Use the equation in the box to calculate the current used by the steamer.

power = current × potential difference

Show clearly how you work out your answer.

.....

.....

Current ..... A

(2 marks)

5 (b) (ii) Which **one** of the following fuses should be used inside the plug of the steamer?

Draw a ring around your answer.

1 A **3 A** **5 A** **10 A** **13 A**

(1 mark)

5

4.2.3.1 Direct and alternating potential difference

Question 07

March 2009 | PHY1BP | Original Q4 | Legacy

QUESTION FOUR

This question is about electromagnetic waves.

4A Changes may occur in substances when they absorb the energy carried by electromagnetic waves.

Which row in the table is correct?

	An alternating current is created in the substance	The substance becomes hotter
1	always	never
2	sometimes	always
3	sometimes	sometimes
4	never	sometimes

4B Radio waves travel in straight lines. However, some types of radio waves can be received on the opposite side of the Earth from the transmitter.

This happens because the radio waves are . . .

1 absorbed by the atmosphere.

2 interfered with by the atmosphere.

3 reflected by the atmosphere.

4 stopped by the atmosphere.

4.2.3.1 Direct and alternating potential difference

Question 07 · continued

The graph indicates how the frequency of electromagnetic waves changes with wavelength.

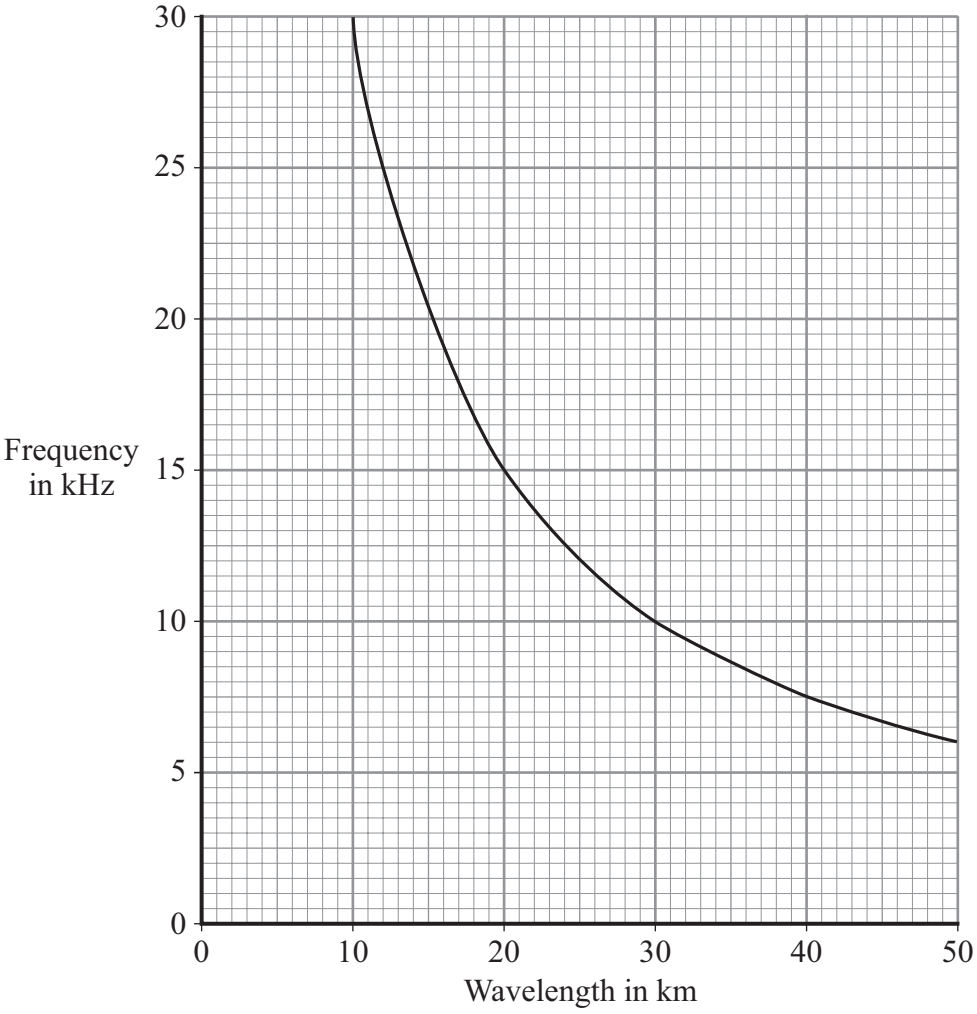

4C The graph shows that when the wavelength doubles, the frequency . . .

1 doubles.

2 halves.

3 quadruples.

4 stays the same.

4D What is the frequency of electromagnetic waves of wavelength 25 000 metres?

1 1.2 kHz

2 1.4 kHz

3 12 kHz

4 14 kHz

4.2.3.1 Direct and alternating potential difference

Question 08

June 2009 | PHY3H | Original Q1 | Legacy

1 (a) The diagram shows a transformer.

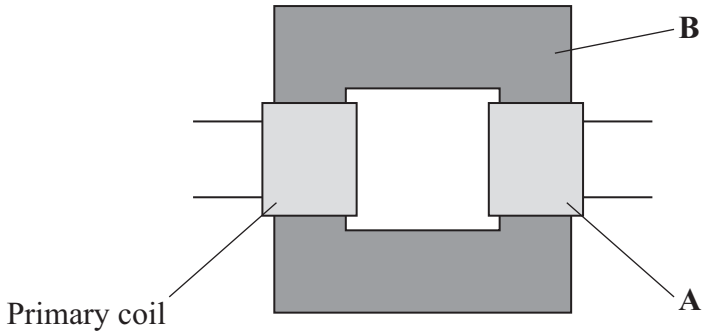

1 (a) (i) What is part **A**?

.....

(1 mark)

1 (a) (ii) What is part **B** and what is it made of?

.....

.....

(2 marks)

1 (a) (iii) When there is an alternating current in the primary coil, what is produced in part **B**?

.....

.....

(2 marks)

4.2.3.1 Direct and alternating potential difference

Question 08 · continued

for mark

1 (b) Transformers are used in the National Grid. The diagram shows part of the National Grid.

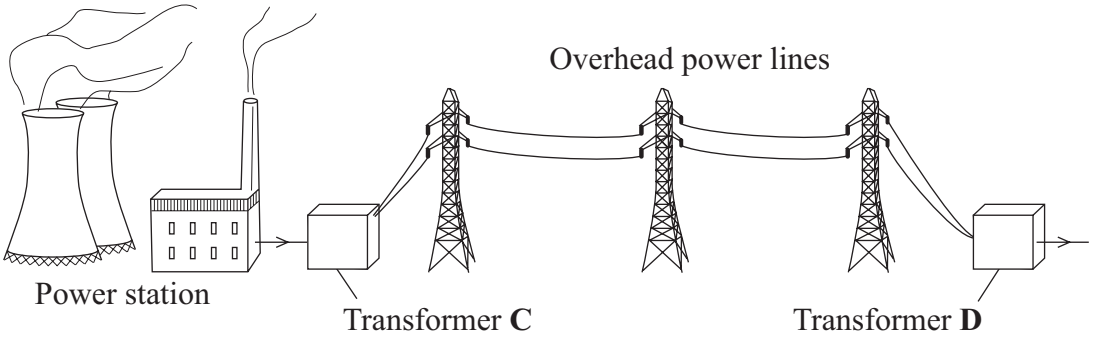

Complete the **two** spaces in the sentence.

Transformer **C** is a ..... transformer and transformer **D** is a ..... transformer. *(1 mark)*

1 (c) This is an item from a newspaper.

Health at risk from power lines?

Are high voltage power lines a health risk to people who live near them?

Some scientists think that scientific evidence shows that they are.

Other scientists do not think that the scientific evidence supports this conclusion.

Which **two** suggestions would reduce the possible risk to people's health? Put a tick (✓) in the box next to your answers.

Do not build new houses near to existing power lines. ☐

Move the power lines so that they take the shortest routes. ☐

Move each power station to the centre of the nearest city. ☐

Build new power lines away from where people live. ☐

Use more transformers in the National Grid. ☐

(2 marks)

8

4.2.3.1 Direct and alternating potential difference

Question 09

5 (a) The diagram shows the basic structure of a step-up transformer.

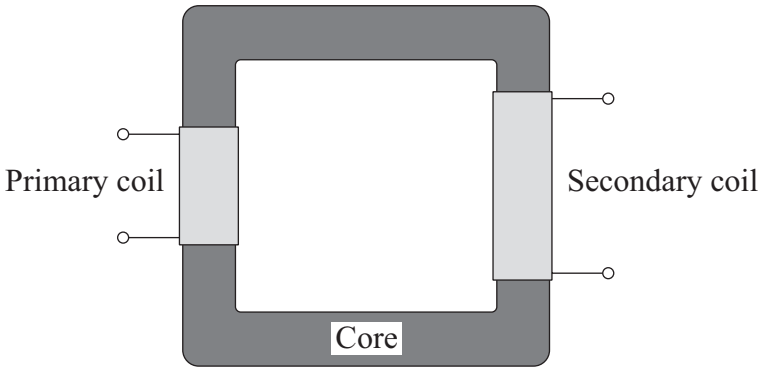

5 (a) (i) What is the core made of?

.....

(1 mark)

5 (a) (ii) Explain how an alternating input produces an alternating output.

.....

.....

.....

.....

.....

.....

(3 marks)

4.2.3.1 Direct and alternating potential difference

Question 09 · continued

for mark

5 (b) Fly killers are used in kitchens and food stores because flying insects carry diseases which cause food poisoning.

The diagram shows the inside of one design. Insects are attracted to a fluorescent lamp. The metal grids have a high potential difference (p.d.) between them. The insects are killed as they fly between the grids.

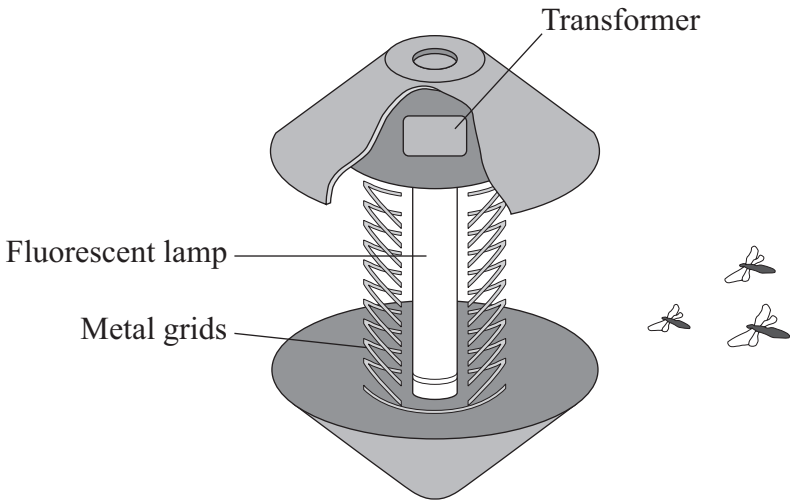

A transformer is used in the fly killer. There is a p.d. of 230 V across the primary coil. There are 300 turns of wire on the primary coil and 4000 turns on the secondary coil.

Use the equation in the box to calculate the p.d. across the secondary coil.

$$\frac{\text{p.d. across primary}}{\text{p.d. across secondary}} = \frac{\text{number of turns on primary}}{\text{number of turns on secondary}}$$

Show clearly how you work out your answer.

.....

.....

.....

.....

.....

Potential difference = ...V

(3 marks)

7

4.2.3.1 Direct and alternating potential difference

Question 10

June 2010 | PHY2H | Original Q6 | Legacy

6 An oscilloscope is connected to an alternating current (a.c.) supply.
The diagram shows the trace produced on the oscilloscope screen.

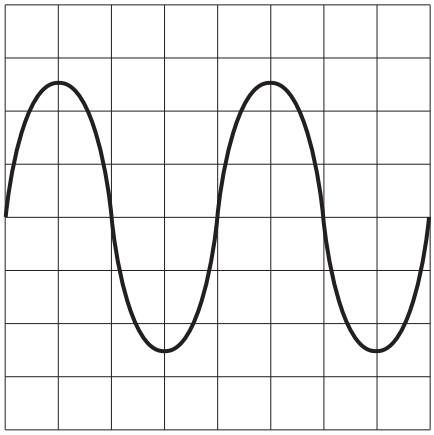

Each horizontal division on the oscilloscope screen represents 0.002 s.

6 (a) Calculate the frequency of the alternating current supply.

Show clearly how you work out your answer and give the unit.

.....

.....

.....

Frequency = ...

(3 marks)

6 (b) What is the frequency of the a.c. mains electricity supply in the UK?

.....

(1 mark)

4

4.2.3.1 Direct and alternating potential difference

Question 11

November 2010 | PHY1BP | Original Q6 | Legacy

QUESTION SIX

Waves from different parts of the electromagnetic spectrum are used for communications.

6A Optical fibres can bend light around corners.

This is because the light . . .

1 is absorbed in the optical fibre.

2 is transmitted through the walls of the optical fibre.

3 is reflected inside the optical fibre.

4 travels faster in the optical fibre.

6B A metal aerial absorbs the energy carried by radio waves. This creates an alternating current (a.c.) in the metal and may produce a temperature change.

Which row in the table is correct?

	Frequency of a.c. produced	Temperature of metal
1	higher than the frequency of the radio waves	increases
2	the same as the frequency of the radio waves	increases
3	lower than the frequency of the radio waves	decreases
4	the same as the frequency of the radio waves	decreases

6C Television and telephone signals sent via satellites use microwaves rather than long wavelength radio waves.

This is because microwaves . . .

1 can pass easily through the Earth's atmosphere.

2 can travel through a vacuum.

3 have longer wavelengths than radio waves.

4 travel faster than radio waves.

4.2.3.1 Direct and alternating potential difference

6D Digital signals are replacing analogue signals in television and telephone transmissions.

Which one of the following statements is correct?

1 Digital signals have discrete values only and are more prone to interference than analogue signals.

2 Digital signals have discrete values only and are less prone to interference than analogue signals.

3 Digital signals vary continuously and are more prone to interference than analogue signals.

4 Digital signals vary continuously and are less prone to interference than analogue signals.

Turn over for the next question

4.2.3.1 Direct and alternating potential difference

Question 12

June 2011 | PHY2H | Original Q6 | Legacy

6 The diagram shows a strain gauge, which is an electrical device used to monitor a changing force.

Applying a force to the gauge causes it to stretch.
This makes the electrical resistance of the wire change.

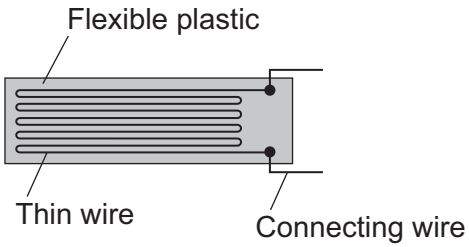

6 (a) (i) Using the correct symbols, **add** to the diagram to show how a battery, an ammeter and a voltmeter can be used to find the resistance of the strain gauge drawn above.

(2 marks)

6 (a) (ii) When in use, the strain gauge is always connected to a d.c. power supply, such as a battery.

How is a d.c. (direct current) power supply different from an a.c. (alternating current) power supply?

.....

.....

.....

(1 mark)

4.2.3.1 Direct and alternating potential difference

Question 12 · continued

6 (b) Before any force is applied, the unstretched gauge, correctly connected to a 3.0 V battery, has a current of 0.040 A flowing through it.

6 (b) (i) Use the equation in the box to calculate the resistance of the unstretched gauge.

potential difference = current × resistance

Show clearly how you work out your answer.

.....

.....

Resistance = ... Ω

(2 marks)

6 (b) (ii) Stretching the gauge causes the current flowing through the gauge to decrease.

What happens to the resistance of the gauge when it is stretched?

.....

.....

(1 mark)

6 (b) (iii) What form of energy is stored in the gauge when a force is applied and the gauge stretches?

.....

(1 mark)

7

4.2.3.1 Direct and alternating potential difference

Question 13

June 2011 | PHY3H | Original Q7 | Legacy

7 (a) In the National Grid, very large step-up transformers link power stations to the transmission cables.

A transformer used for this purpose has 800 turns on its primary coil and 12 800 turns on its secondary coil. The p.d. (potential difference) across its primary coil is 25 kV.

Use the equation in the box to calculate the p.d. across its secondary coil.

$$\frac{\text{p.d. across primary}}{\text{p.d. across secondary}} = \frac{\text{number of turns on primary}}{\text{number of turns on secondary}}$$

Show clearly how you work out your answer **and** give the unit.

.....

.....

p.d. across secondary coil = ...

(3 marks)

7 (b) The primary and secondary coils of a transformer are made of insulated wire.

Why is this insulation necessary?

.....

.....

(1 mark)

7 (c) Describe what happens when an alternating potential difference is applied across the primary coil of a transformer.

.....

.....

.....

.....

.....

.....

(3 marks)

7

4.2.3.1 Direct and alternating potential difference

Question 14

January 2013 | PH2HP | Original Q4 | Legacy

4 (a) A student set up the circuit shown in the diagram. The student uses the circuit to obtain the data needed to plot a current - potential difference graph for a diode.

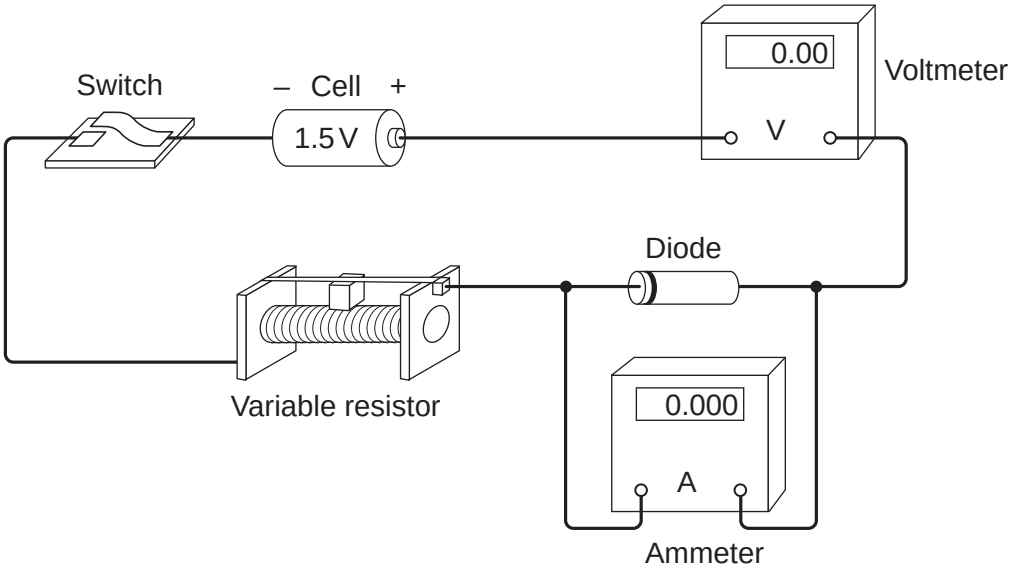

4 (a) (i) Draw, in the boxes, the circuit symbol for a diode and the circuit symbol for a variable resistor.

Diode	**Variable resistor**

(2 marks)

4 (a) (ii) The student made two mistakes when setting up the circuit.

What **two** mistakes did the student make?

1 .....

.....

2 .....

.....

(2 marks)

4.2.3.1 Direct and alternating potential difference

Question 14 · continued

4 (b) After correcting the circuit, the student obtained a set of data and plotted the graph below.

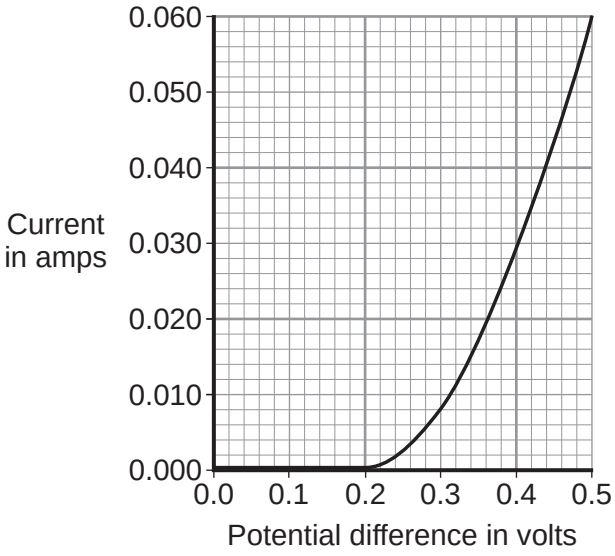

4 (b) (i) At what potential difference did the diode start to conduct an electric current?

..... V
(1 mark)

4 (b) (ii) Use data from the graph to calculate the resistance of the diode when the potential difference across the diode is 0.3 V.

Use the correct equation from the Physics Equations Sheet.

.....

.....

.....

Resistance = ... ohms
(3 marks)

Question 4 continues on the next page

4.2.3.1 Direct and alternating potential difference

Question 14 · continued

4 (c) The diagram shows the trace produced by an alternating current (a.c.) supply on an oscilloscope.

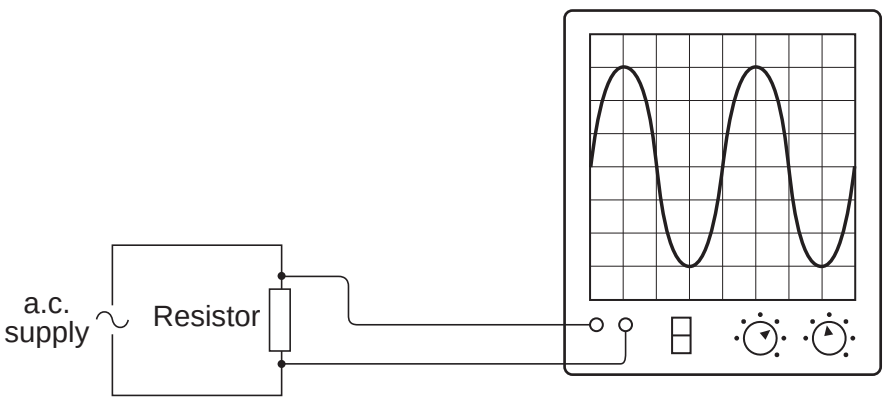

Each horizontal division on the oscilloscope screen represents a time of 0.01s.

4 (c) (i) Calculate the frequency of the a.c. supply.

.....

.....

.....

Frequency = ... hertz
(2 marks)

4.2.3.1 Direct and alternating potential difference

Question 14 · continued

4 (c) (ii) A diode is now connected in series with the a.c. power supply.

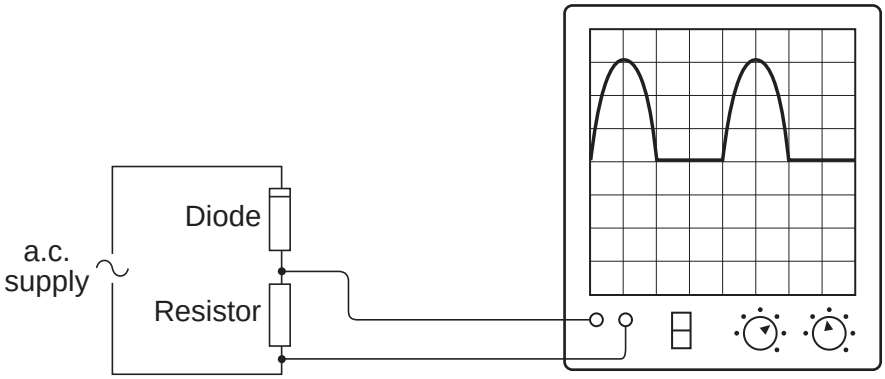

Why does the diode cause the trace on the oscilloscope screen to change?

.....

.....

.....

.....

(2 marks)

12

4.2.3.1 Direct and alternating potential difference

Question 15

June 2013 | PH2HP | Original Q6 | Legacy

6 The picture shows an electric cooker hob. The simplified circuit diagram shows how the four heating elements connect to the mains electricity supply. The heating elements are identical.

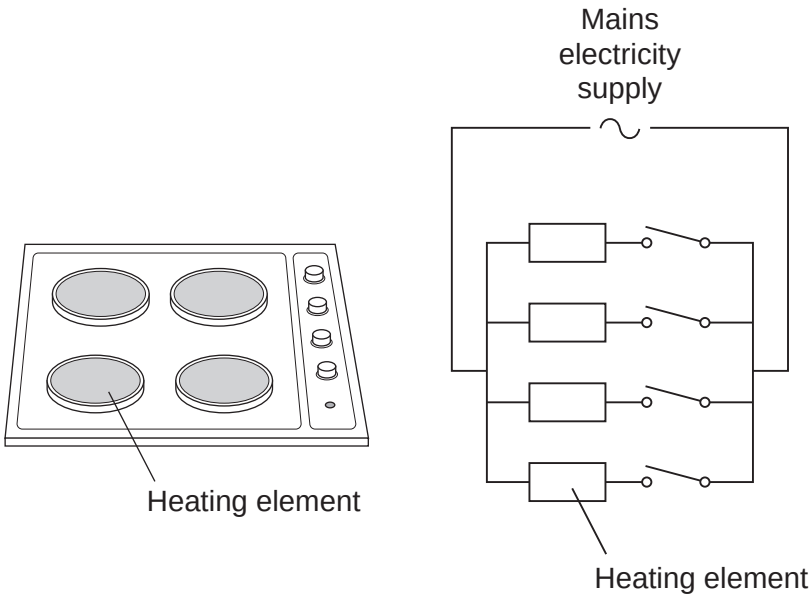

When all four heating elements are switched on at full power the hob draws a current of 26 A from the 230 V mains electricity supply.

6 (a) Calculate the resistance of one heating element when the hob is switched on at full power.

Use the correct equation from the Physics Equations Sheet.

Give your answer to 2 significant figures.

.....

.....

.....

Resistance = ... Ω

(3 marks)

Question 6 continues on the next page

4.2.3.1 Direct and alternating potential difference

Question 15 · continued

6 (b) The table gives the maximum current that can safely pass through copper wires of different cross-sectional area.

Cross-sectional area in mm^2	Maximum safe current in amps
1.0	11.5
2.5	20.0
4.0	27.0
6.0	34.0

6 (b) (i) The power sockets in a home are wired to the mains electricity supply using cables containing 2.5 mm^2 copper wires. Most electrical appliances are connected to the mains electricity supply by plugging them into a standard power socket.

It would **not** be safe to connect the electric cooker hob to the mains electricity supply by plugging it into a standard power socket.

Why?

.....

.....

.....

.....

(2 marks)

6 (b) (ii) Describe the structure of the cable that should be used to connect the electric cooker hob to the mains electricity supply.

.....

.....

.....

.....

.....

.....

.....

.....

(3 marks)

4.2.3.1 Direct and alternating potential difference

Question 15 · continued

6 (c) Mains electricity is an alternating current supply. Batteries supply a direct current.

What is the difference between an alternating current and a direct current?

.....

.....

.....

.....

(2 marks)

10

4.2.3.1 Direct and alternating potential difference

Question 16

June 2013 | PH3HP | Original Q7 | Legacy

7 Batteries inside laptop computers are charged using laptop chargers. The laptop charger contains a traditional transformer.

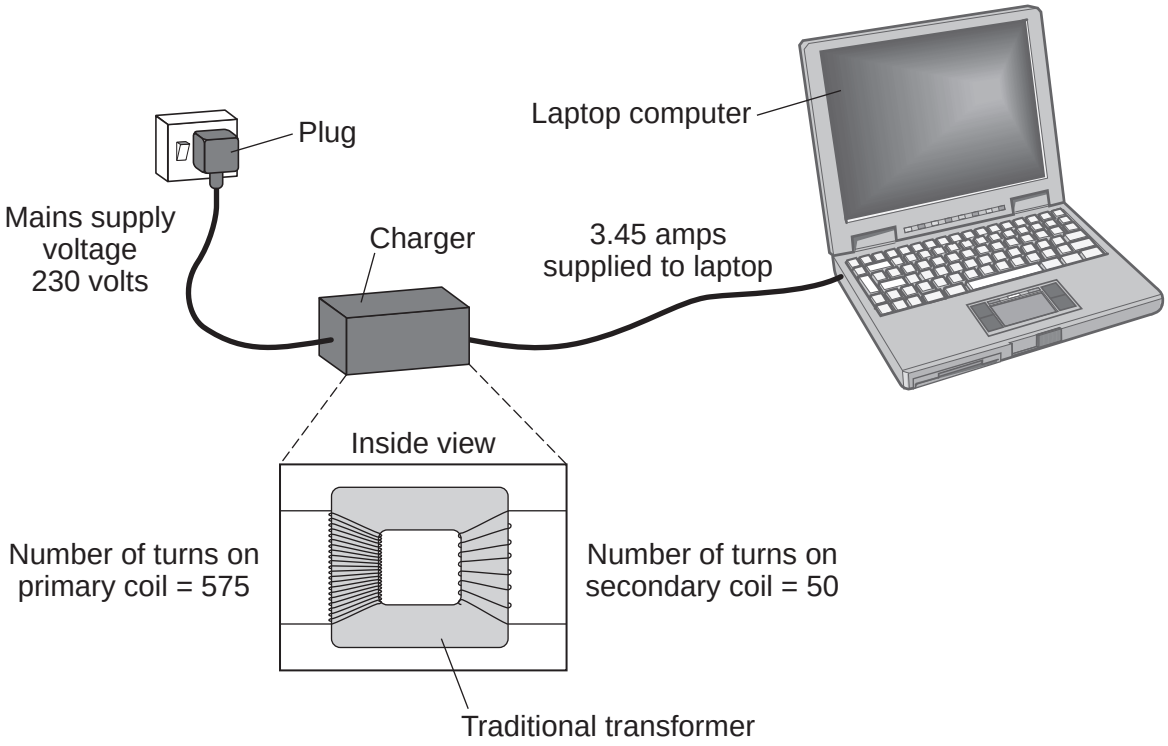

7 (a) The alternating current flowing through the primary coil of the transformer creates an alternating current in the secondary coil.

Explain how.

.....

.....

.....

.....

.....

.....

.....

.....

(3 marks)

4.2.3.1 Direct and alternating potential difference

Question 16 · continued

7 (b) (i) Use information from the diagram to calculate the potential difference the charger supplies to the laptop.

Use the correct equation from the Physics Equations Sheet.

.....

.....

.....

.....

Potential difference = ... V

(2 marks)

7 (b) (ii) Calculate the current in the primary coil of the transformer when the laptop is being charged.

Assume the transformer is 100% efficient.

Use the correct equation from the Physics Equations Sheet.

.....

.....

.....

.....

Current = ... A

(2 marks)

Question 7 continues on the next page

4.2.3.1 Direct and alternating potential difference

Question 16 · continued

7 (c) Switch mode transformers can be used in mobile phone chargers.

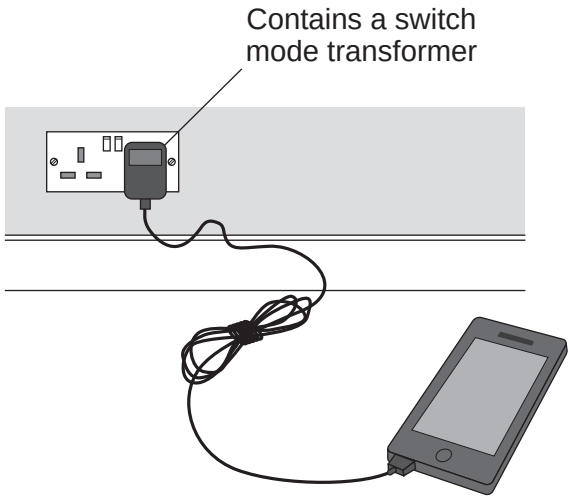

Switch mode transformers and traditional transformers can both use the UK mains supply.

The switch mode transformer is smaller and lighter than the traditional transformer used in the laptop charger.

Give **one** other advantage of the switch mode transformer.

.....

.....

(1 mark)

7 (d) Laptop batteries and mobile phone batteries can only be recharged a limited number of times. After this, the batteries cannot store enough charge to be useful. Scientists are developing new batteries that can be recharged many more times than existing batteries.

Suggest **one** other advantage of developing these new batteries.

.....

.....

.....

(1 mark)

9

4.2.3.1 Direct and alternating potential difference

Question 17

June 2014 | PH3HP | Original Q8 | Legacy

8 Musicians sometimes perform on a moving platform.

Figure 13 shows the parts of the lifting machine used to move the platform up and down.

Figure 13

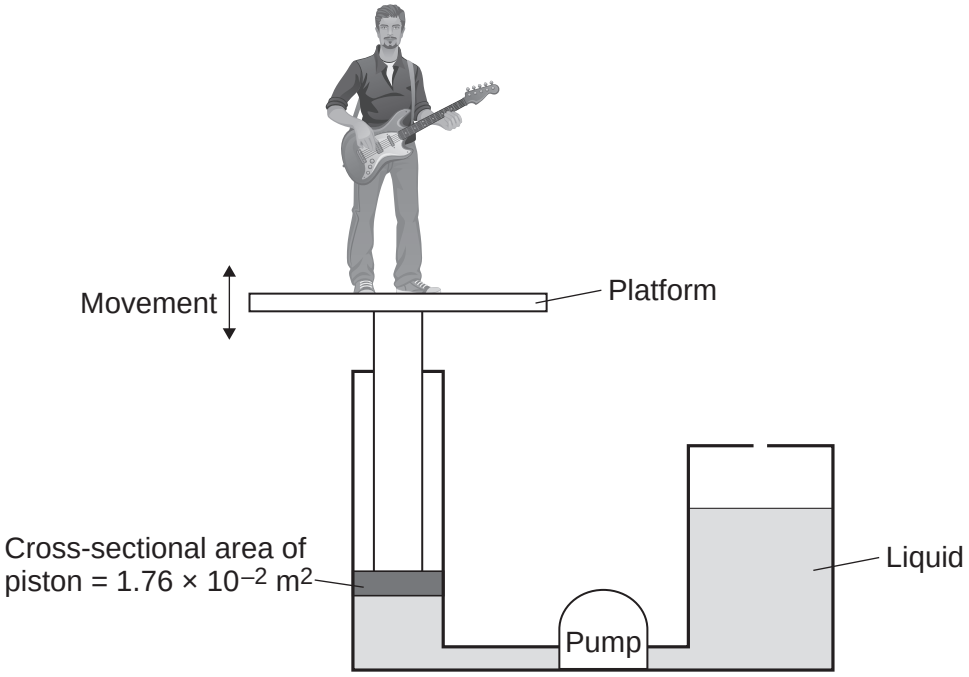

8 (a) What type of system uses a liquid to transmit a force?

[1 mark]

.....

8 (b) The pump creates a pressure in the liquid of 8.75 x 10^4 Pa to move the platform upwards.

Calculate the force that the liquid applies to the piston.

Use the correct equation from the Physics Equations Sheet.

[2 marks]

.....

.....

.....

Force = ... N

4.2.3.1 Direct and alternating potential difference

Question 17 · continued

8 (c) The liquid usually used in the machine is made by processing oil from underground wells. A new development is to use plant oil as the liquid.

Extracting plant oil requires less energy than extracting oil from underground wells.

Suggest an environmental advantage of using plant oil.

[1 mark]

.....

.....

.....

Question 8 continues on the next page

4.2.3.1 Direct and alternating potential difference

Question 17 · continued

8 (d) Musicians often use loudspeakers.

Figure 14 shows how a loudspeaker is constructed.

Figure 14

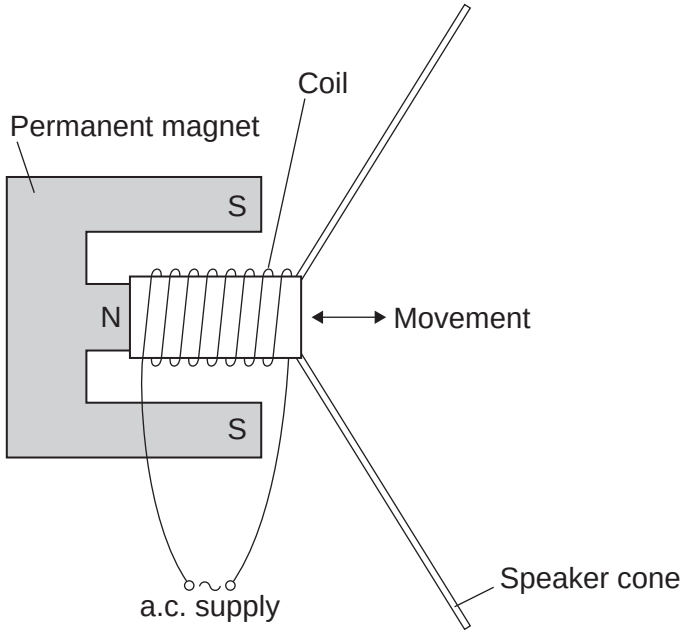

The loudspeaker cone vibrates when an alternating current flows through the coil.

Explain why.

[4 marks]

.....

.....

.....

.....

.....

.....

.....

.....

.....

.....

8

4.2.3.1 Direct and alternating potential difference

Question 18

June 2015 | PH3HP | Original Q5 | Legacy

5 **Figure 10** shows apparatus set up by a student.

Figure 10

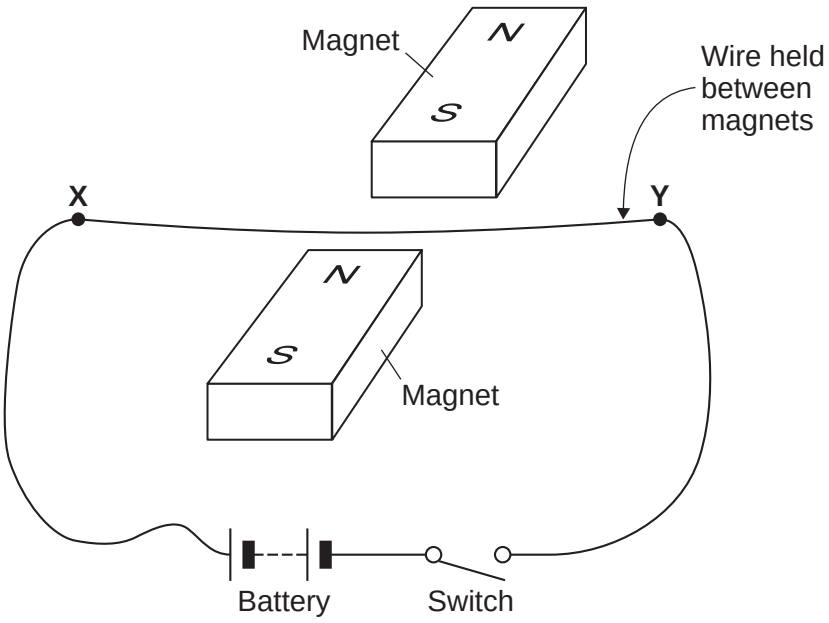

Closing the switch creates a force that acts on the wire **XY**.

5 (a) (i) Explain why a force acts on the wire **XY** when the switch is closed.

[3 marks]

.....

.....

.....

.....

.....

.....

5 (a) (ii) The force causes the wire **XY** to move.
Draw an arrow on **Figure 10** to show the direction in which the wire **XY** will move.

[1 mark]

5 (a) (iii) State the effect that this experiment demonstrates.

[1 mark]

.....

4.2.3.1 Direct and alternating potential difference

Question 18 · continued

5 (b) The student replaced the battery with a low frequency alternating current (a.c.) power supply.

The student closed the switch.

5 (b) (i) Describe the movement of the wire.

[1 mark]

.....

5 (b) (ii) Give a reason for your answer to part **(b)(i)**.

[1 mark]

.....

.....

.....

7

4.2.3.1 Direct and alternating potential difference

Question 19

June 2015 | PH3HP | Original Q8 | Legacy

8 An electric toothbrush is charged by standing it on a separate charging base. **Figure 15** shows the inside of the electric toothbrush and the charging base.

Figure 15

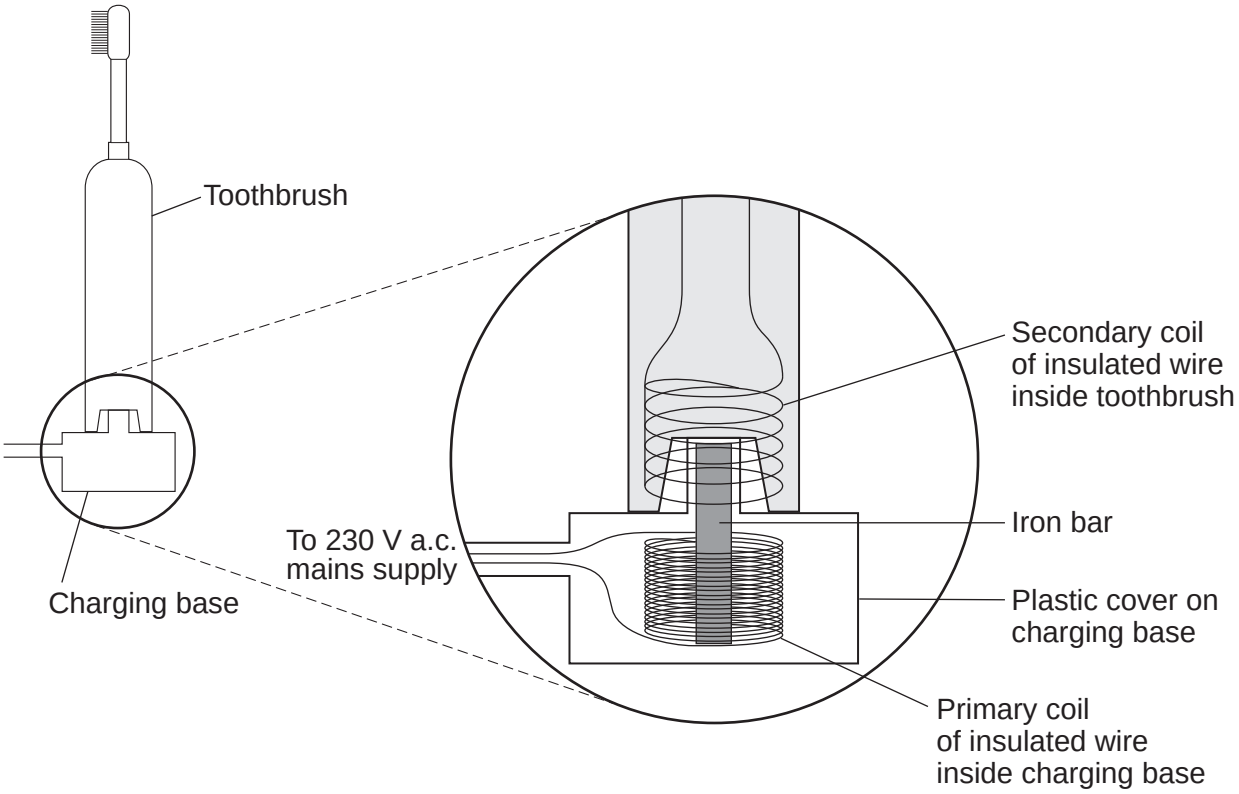

8 (a) An alternating potential difference (p.d.) across the coil in the charging base creates an alternating current in the coil inside the toothbrush.

Explain how.

[3 marks]

.....

.....

.....

.....

.....

.....

.....

.....

4.2.3.1 Direct and alternating potential difference

Question 19 · continued

8 (b) When the toothbrush is being charged, the p.d. across the primary coil in the charging base is 230 V.

The charging p.d. across the secondary coil in the toothbrush is 7.2 V.

The primary coil in the charging base has 575 turns of wire on its coil.

Calculate the number of turns on the secondary coil inside the toothbrush.

Use the correct equation from the Physics Equations Sheet.

[2 marks]

.....

.....

.....

.....

Number of turns on the secondary coil = ...

5

4.2.3.1 Direct and alternating potential difference

Question 20

June 2016 | PH3HP | Original Q2 | Legacy

2 **Figure 2** shows the structure of a traditional transformer.

Figure 2

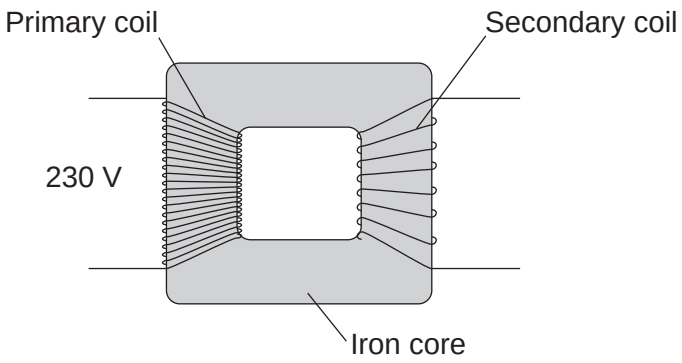

2 (a) There is an alternating current in the primary coil of the transformer.

State what is produced in the iron core.

[2 marks]

_____

_____

2 (b) A transformer has only **one** turn of wire on the secondary coil.
The potential difference across the secondary coil is 11.5 V
The potential difference across the primary coil is 230 V

Calculate the number of turns on the primary coil.

Use the correct equation from the Physics Equations Sheet.

[2 marks]

_____

_____

_____

_____

Number of turns on the primary coil = _____

Question 2 continues on the next page

Question 20 · continued

2 (c) In most transformers, the power output is less than the power input.

State why.

[1 mark]

_____

_____

2 (d) Two students investigated how magnets can be used to produce a potential difference. The students held a coil of wire above a magnet. The students quickly lowered the coil so that the magnet was inside the coil, as shown in **Figure 3**.

Figure 3

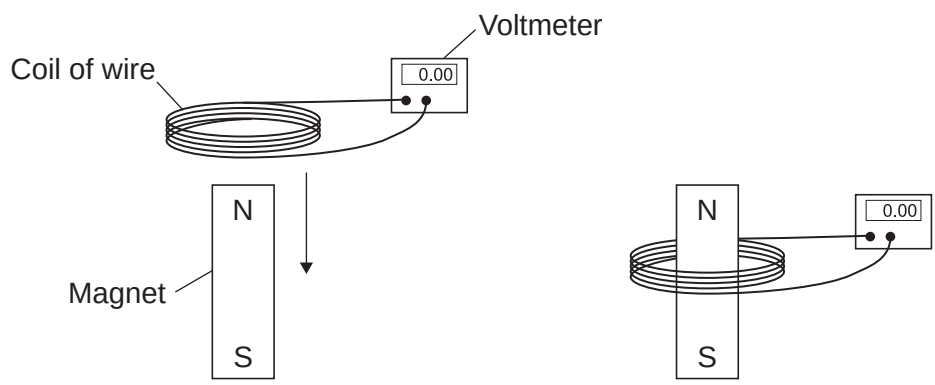

The students recorded the maximum potential difference for coils with different numbers of turns of wire. The results are shown in **Table 1**.

Table 1

Number of turns of wire in the coil	Maximum potential difference in volts	
	Results from student 1	Results from student 2
5	0.09	0.08
10	0.20	0.15
15	0.31	0.25
20	0.39	0.33
25	0.51	0.39

4.2.3.1 Direct and alternating potential difference

Question 20 · continued

2 (d) (i) State the resolution of the voltmeter.

Give **one** reason why the resolution of the voltmeter is suitable for this investigation.

[2 marks]

Resolution _____

Reason _____

_____

2 (d) (ii) The two students used exactly the same equipment to carry out their investigations. Both students recorded their results correctly.

Give the reason why student 2 got different results from student 1.

[1 mark]

_____

_____

2 (d) (iii) The students decided that even though the results were different, there was no need to repeat the investigation.

How do the results show that the investigation is reproducible?

[1 mark]

_____

_____

2 (d) (iv) State the name of the process which causes the potential difference to be produced in this investigation.

[1 mark]

_____

2 (e) A transformer has been developed that can be used with many different devices.

Suggest **one** advantage of having a transformer that can be used with many different devices.

[1 mark]

_____

_____

11

4.2.3.1 Direct and alternating potential difference

Question 21

June 2017 | PH3HP | Original Q1 | Legacy

1 **Figure 1** shows a loudspeaker made by a student. When there is a current in the coil the paper cone moves.

Figure 1

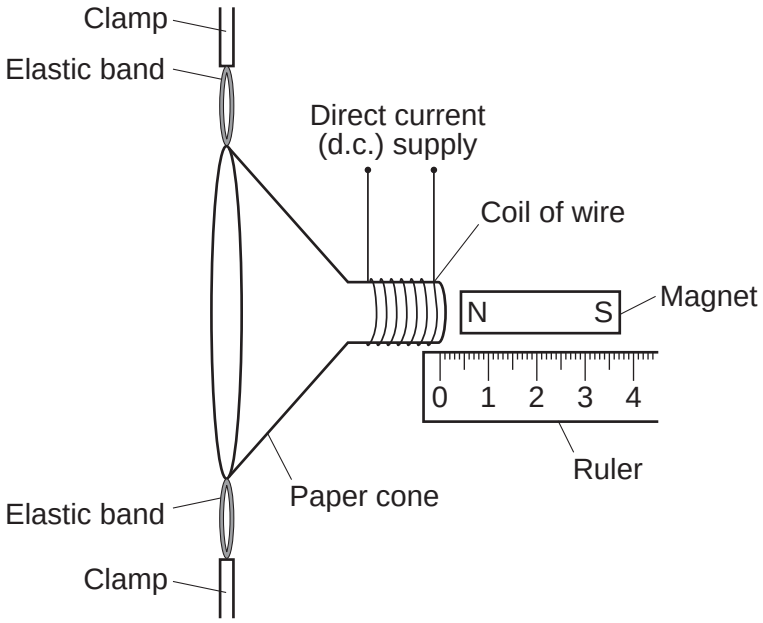

The student investigates how changing the size of the current in the coil of wire affects the distance moved by the paper cone.

1 (a) State **two** variables the student should control.

[2 marks]

1 _____

_____

2 _____

_____

4.2.3.1 Direct and alternating potential difference

Question 21 · continued

1 (b) The results of the student's investigation are shown in **Figure 2**.

Figure 2

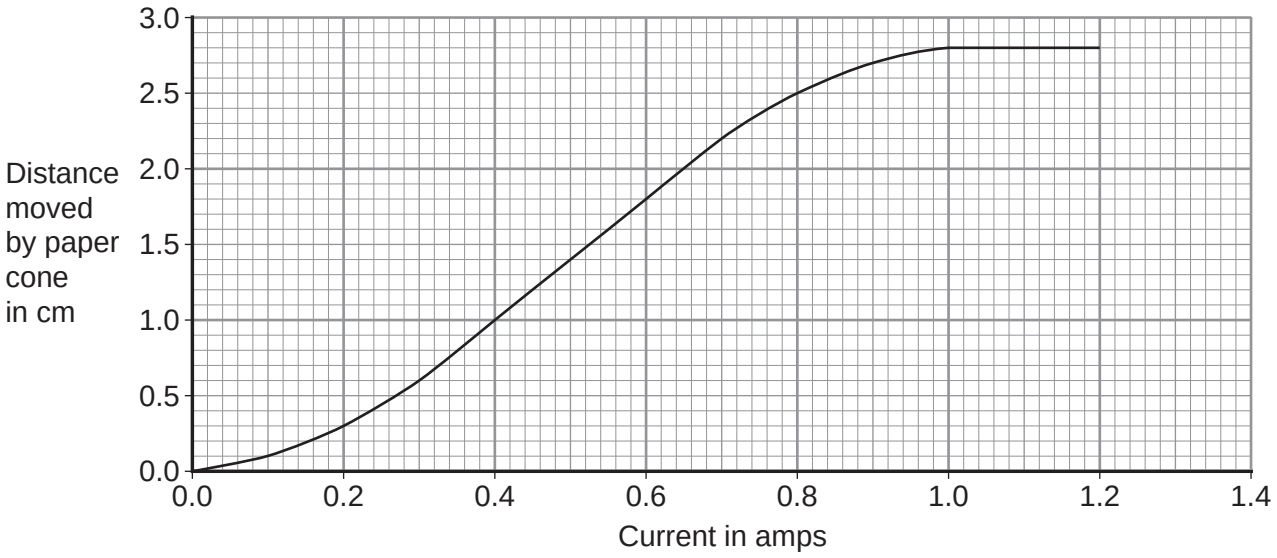

1 (b) (i) When the current increases from 0.5 A to 0.9 A, how much does the distance moved increase?

[2 marks]

Increase in distance moved = _____ cm

1 (b) (ii) State **two** conclusions that can be made from the graph.

[2 marks]

1 _____

_____

2 _____

_____

6

4.2.3.1 Direct and alternating potential difference

Question 22

June 2018 | 8463/2H | Original Q3

0 3 P-waves and S-waves are two types of seismic wave caused by earthquakes.

0 3 . 1 Which **one** of the statements about P-waves and S-waves is correct?

Tick **one** box.

[1 mark]

P-waves and S-waves are transverse. ☐

P-waves and S-waves are longitudinal. ☐

P-waves are transverse and S-waves are longitudinal. ☐

P-waves are longitudinal and S-waves are transverse. ☐

Seismometers on the Earth's surface record the vibrations caused by seismic waves.

Figure 3 shows the vibration recorded by a seismometer for one P-wave.

Figure 3

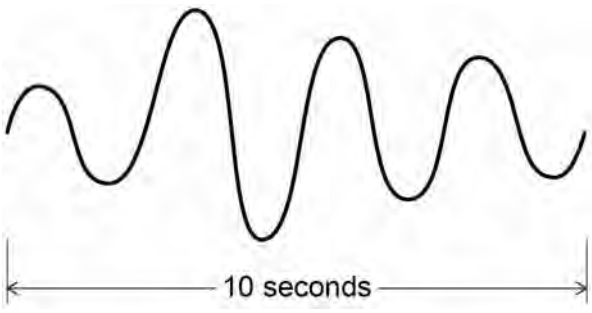

0 3 . 2 Calculate the frequency of the P-wave shown in **Figure 3**.

[1 mark]

Frequency = _____ Hz

4.2.3.1 Direct and alternating potential difference

Question 22 · continued

0 3 . 3 Write down the equation which links frequency, wavelength and wave speed.

[1 mark]

0 3 . 4 The P-wave shown in **Figure 3** is travelling at 7200 m/s.

Calculate the wavelength of the P-wave.

[3 marks]

Wavelength = _____ m

0 3 . 5 Explain why the study of seismic waves provides evidence for the structure of the Earth's core.

[2 marks]

Question 3 continues on the next page

4.2.3.1 Direct and alternating potential difference

Question 22 · continued

Figure 4 shows a simple seismometer made by a student.

Figure 4

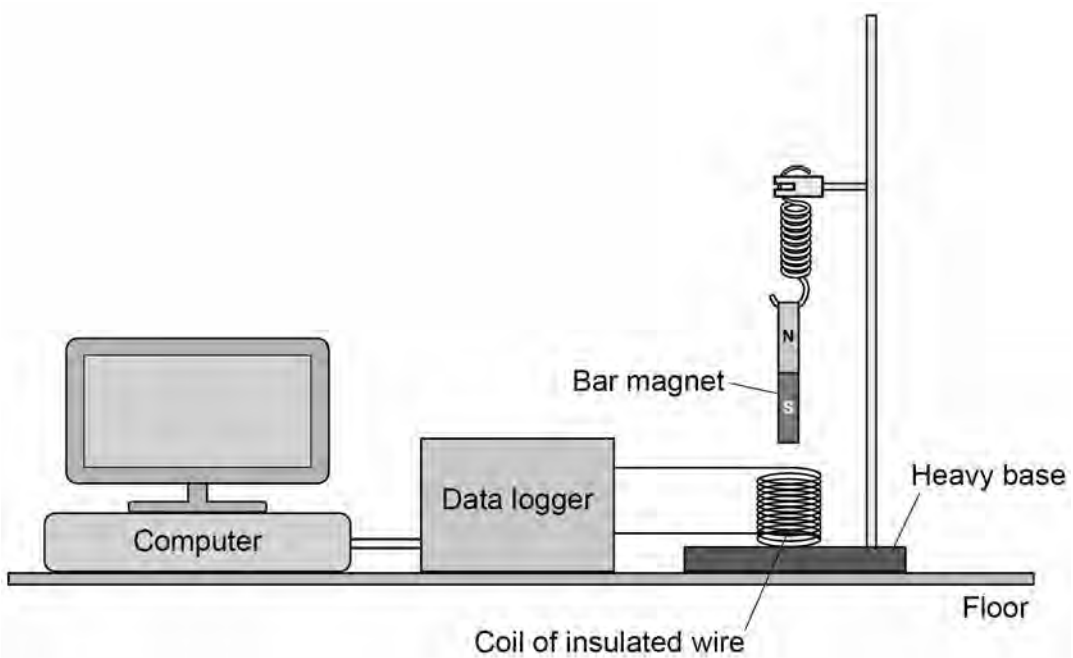

To test that the seismometer works, the student pushes the bar magnet into the coil and then releases the bar magnet.

0 3 . 6 Why does the movement of the bar magnet induce a potential difference across the coil?

[1 mark]

0 3 . 7 Why is the induced potential difference across the coil alternating?

[1 mark]

4.2.3.1 Direct and alternating potential difference

Question 22 · continued

0 3 . 8 **Figure 5** shows how the potential difference induced across the coil varies after the bar magnet has been released.

Figure 5

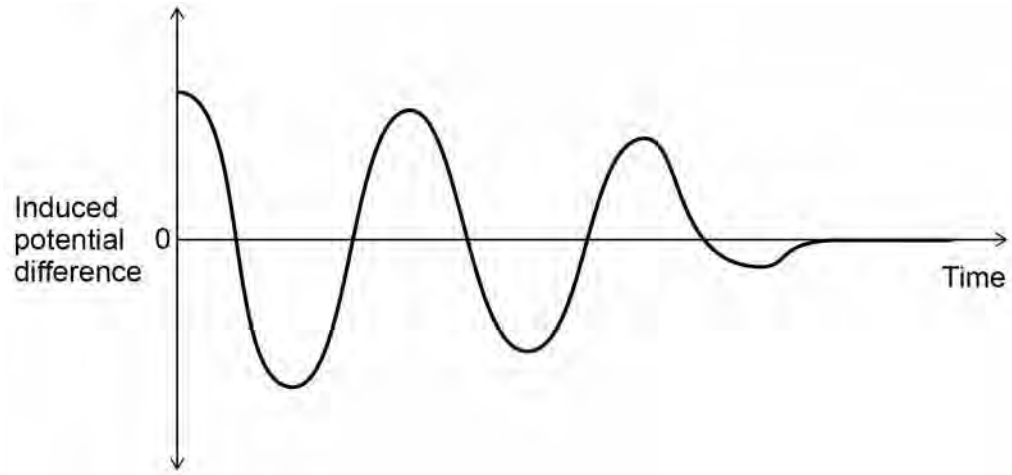

Which statement describes the movement of the magnet when the induced potential difference is zero?

Tick **one** box.

[1 mark]

Accelerating upwards. ☐

Constant speed upwards. ☐

Decelerating downwards. ☐

Stationary. ☐

0 3 . 9 The seismometer cannot detect small vibrations.

Suggest **two** changes to the design of the seismometer that would make it more sensitive to small vibrations.

[2 marks]

1 _____

_____

2 _____

_____

13

4.2.3.1 Direct and alternating potential difference

Question 23

November 2020 | 8463/2H | Original Q7

0 7 **Figure 10** shows a portable power supply.

Figure 10

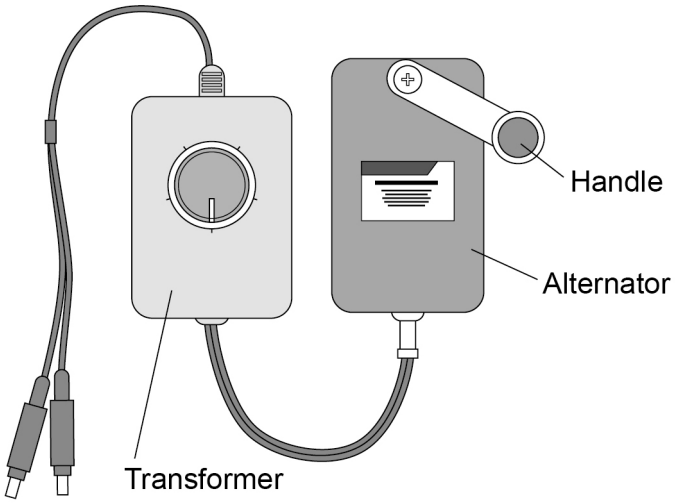

0 7 . 1 The portable power supply has an alternator connected to a transformer.

The transformer can be adjusted to have different numbers of turns on the secondary coil.

Suggest why.

[2 marks]

4.2.3.1 Direct and alternating potential difference

Question 23 · continued

0 7 . 2 A lamp is connected to the power supply.

The lamp requires an input potential difference of 5.0 V.

The alternator generates a potential difference of 1.5 V.

The primary coil of the transformer has 150 turns.

Calculate the number of turns needed on the secondary coil.

[3 marks]

Number of turns on the secondary coil = _____

Question 7 continues on the next page

4.2.3.1 Direct and alternating potential difference

Question 23 · continued

Figure 11 shows the inside parts of the alternator.

Figure 11

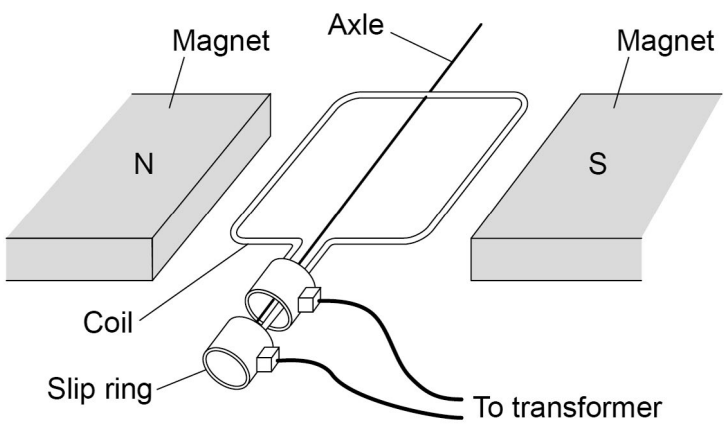

0 7 . 3 The handle of the alternator is turned, causing the coil to rotate.

Explain why an alternating current is induced in the coil.

[5 marks]

4.2.3.1 Direct and alternating potential difference

Question 23 · continued

0 7 . 4 Suggest the purpose of the slip rings.

[1 mark]

0 7 . 5 The alternator from the portable power supply is disconnected from the transformer and lamp.

Explain why the handle of the alternator becomes much easier to turn.

[3 marks]

14

4.2.3.1 Direct and alternating potential difference

Question 24

November 2021 | 8463/1H | Original Q1

0 1 **Figure 1** shows an electric car being recharged.

Figure 1

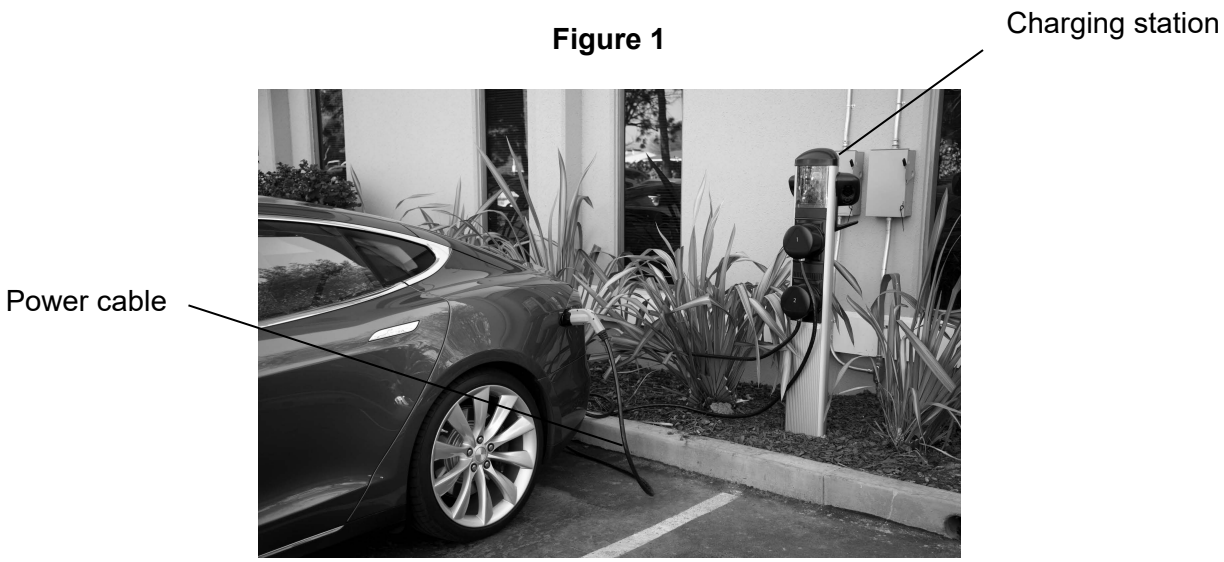

0 1 . 1 The charging station applies a direct potential difference across the battery of the car.

What does 'direct potential difference' mean?

[1 mark]

Question 1 continues on the next page

4.2.3.1 Direct and alternating potential difference

Question 24 · continued

0 1 . 2 Which equation links energy transferred (*E*), power (*P*) and time (*t*)?

[1 mark]

Tick (✓) **one** box.

energy transferred = $\frac{\text{power}}{\text{time}}$ ☐

energy transferred = $\frac{\text{time}}{\text{power}}$ ☐

energy transferred = power × time ☐

energy transferred = power^2 × time ☐

0 1 . 3 The battery in the electric car can store 162 000 000 J of energy.

The charging station has a power output of 7200 W.

Calculate the time taken to fully recharge the battery from zero.

[3 marks]

Time taken = _____ s

4.2.3.1 Direct and alternating potential difference

Question 24 · continued

0 1 . 4 Which equation links current (I), potential difference (V) and resistance (R)?

[1 mark]

Tick (✓) **one** box.

$I = V \times R$ ☐

$I = V^2 \times R$ ☐

$R = I \times V$ ☐

$V = I \times R$ ☐

0 1 . 5 The potential difference across the battery is 480 V.

There is a current of 15 A in the circuit connecting the battery to the motor of the electric car.

Calculate the resistance of the motor.

[3 marks]

Resistance = _____ Ω

Question 1 continues on the next page

4.2.3.1 Direct and alternating potential difference

Question 24 · continued

0 1 . 6 Different charging systems use different electrical currents.

- Charging system **A** has a current of 13 A.
- Charging system **B** has a current of 26 A.
- The potential difference of both charging systems is 230 V.

How does the time taken to recharge a battery using charging system **A** compare with the time taken using charging system **B**?

[1 mark]

Tick (✓) **one** box.

Time taken using system **A** is half the time of system **B** ☐

Time taken using system **A** is the same as system **B** ☐

Time taken using system **A** is double the time of system **B** ☐

10

4.2.3.1 Direct and alternating potential difference

Question 25

June 2022 | 8463/2HR | Original Q7

0 7 The National Grid uses transformers to change potential difference (pd).

Figure 12 shows a transformer.

Figure 12

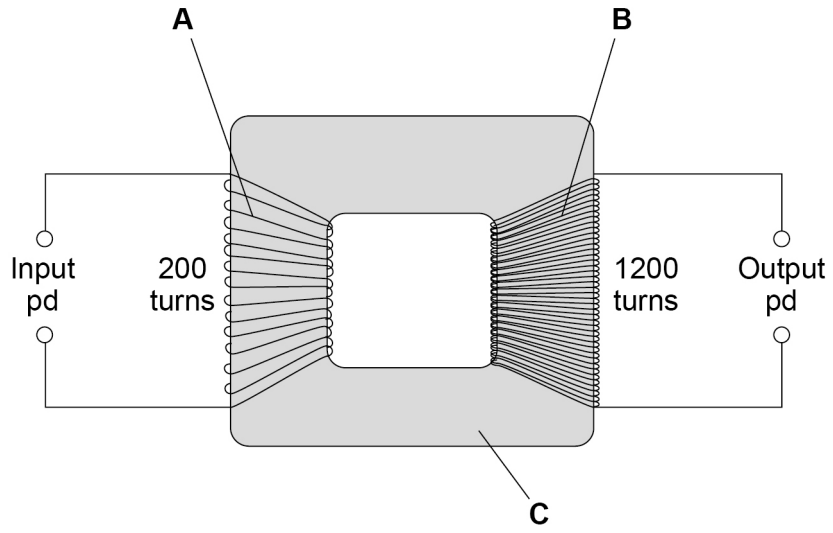

0 7 . 1 Identify the parts of the transformer labelled in **Figure 12**.

[2 marks]

A _____

B _____

C _____

0 7 . 2 There is an alternating input pd of 230 V.

Determine the output pd.

Use the Physics Equations Sheet.

[3 marks]

_____

_____

_____

_____

_____

Output pd = _____ V

4.2.3.1 Direct and alternating potential difference

Question 25 · continued

0 7 . 3 The input pd causes an alternating current.

Explain why there is an alternating current in the output when the transformer is connected to a circuit.

[3 marks]

Question 7 continues on the next page

Question 25 · continued

Figure 13 shows a large cable supported by two wooden poles. The cable is connected to an electricity supply.

Figure 13

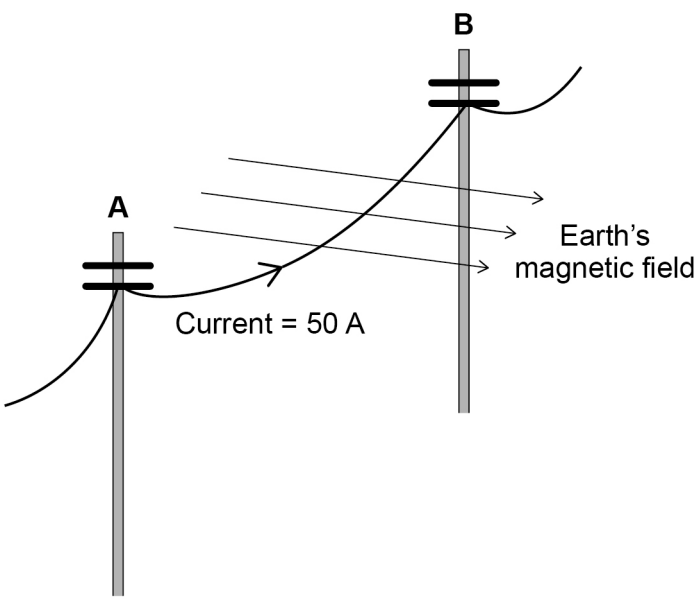

0 7 . 4 There is a force on the cable due to the Earth's magnetic field when the current is in the direction **A** to **B**.

What is the direction of this force?

[1 mark]

Tick (✓) **one** box.

Down ☐

Left ☐

Right ☐

Up ☐

4.2.3.1 Direct and alternating potential difference

Question 25 · continued

0 7 . 5 The cable experiences a force of 0.045 N due to the Earth's magnetic field.

magnetic flux density = 60 μT

current = 50 A

Calculate the length of the cable between **A** and **B**.

Use the Physics Equations Sheet.

[4 marks]

Length = _____ m

0 7 . 6 State **one** assumption you made in your calculation.

[1 mark]

_____

14

4.2.3.1 Direct and alternating potential difference

Question 26

June 2023 | 8463/1H | Original Q3

0 3 **Figure 4** shows an electrical circuit used to heat the windscreen of a car.

Each resistor in the circuit represents a heating element.

Figure 4

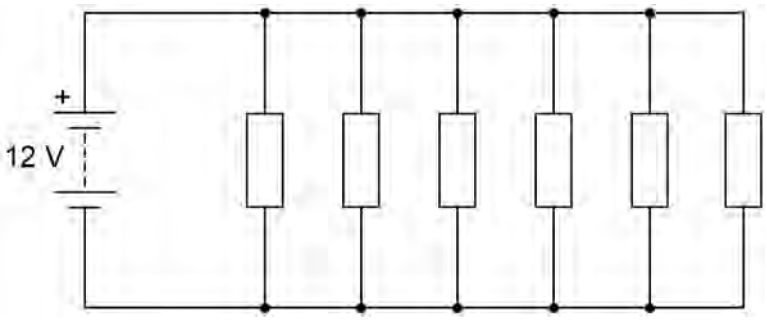

0 3 . 1 The 12 V battery supplies direct potential difference.

What is meant by 'direct potential difference'?

[1 mark]

Use the Physics Equations Sheet to answer questions **03.2** and **03.3**.

0 3 . 2 Which equation links charge flow (Q), energy (E) and potential difference (V)?

[1 mark]

Tick (✓) **one** box.

$E = \frac{V}{Q}$ ☐

$E = QV$ ☐

$E = \frac{Q}{V}$ ☐

$E = \frac{V^2}{Q}$ ☐

4.2.3.1 Direct and alternating potential difference

Question 26 · continued

0 3 . 3 Calculate the charge flow through the 12 V battery when the battery transfers 5010 J of energy.

[3 marks]

Charge flow = _____ C

0 3 . 4 Ice forms on the windscreen at a temperature of 0 °C.

The electrical circuit transfers 5010 J of energy to the ice.

A mass of 0.015 kg of ice melts.

Calculate the specific latent heat of fusion of water.

Use the Physics Equations Sheet.

[3 marks]

Specific latent heat of fusion of water = _____ J/kg

4.2.3.1 Direct and alternating potential difference

Question 26 · continued

0 3 . 5 The electrical circuit was left switched on while the ice changed from a solid to a liquid and increased in temperature to 5 °C.

Explain the changes in the arrangement **and** movement of the particles as the ice melted and the temperature increased to 5 °C.

[6 marks]

14

4.2.3.1 Direct and alternating potential difference

Question 27

June 2023 | 8463/2H | Original Q9

0 9 A dynamo is used to generate an electric current.

Figure 22 shows the inside parts of the dynamo connected to a lamp.

Figure 22

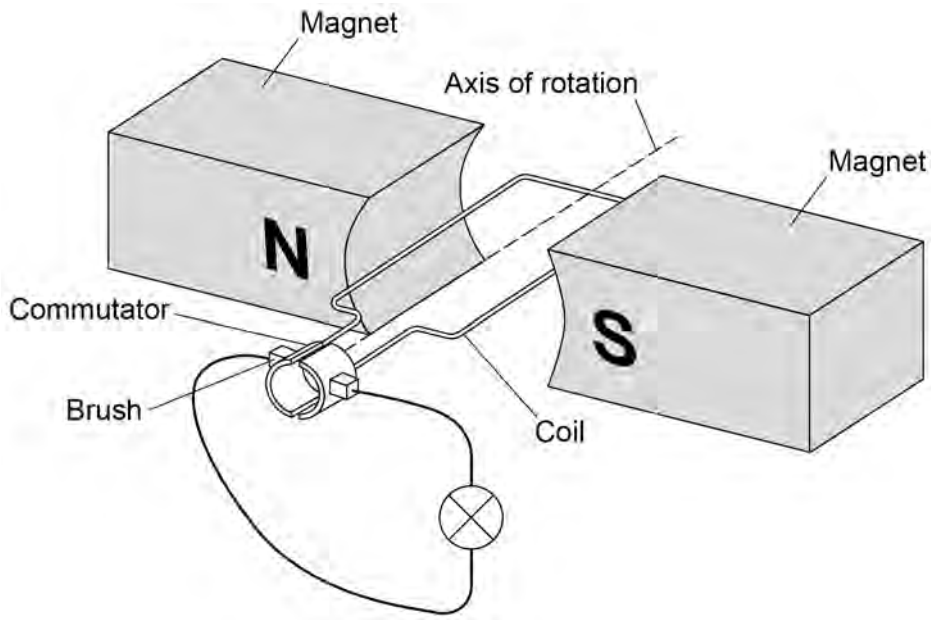

0 9 . 1 The coil is rotated.

Explain why a direct current is induced in the coil.

[5 marks]

4.2.3.1 Direct and alternating potential difference

Question 27 · continued

0 9 . 2 Sketch a graph on **Figure 23** to show how the potential difference generated across the lamp varies for **two** complete revolutions of the dynamo coil.

[1 mark]

Figure 23



0 9 . 3 The lamp is disconnected from the dynamo.

Explain why the dynamo becomes much easier to turn.

[3 marks]

9

4.2.3.1 Direct and alternating potential difference

Question 28

June 2025 | 8463/2H | Original Q9

0 9 Transformers are used to change alternating potential differences.

0 9 . 1 **Figure 11** shows a transformer.

Figure 11

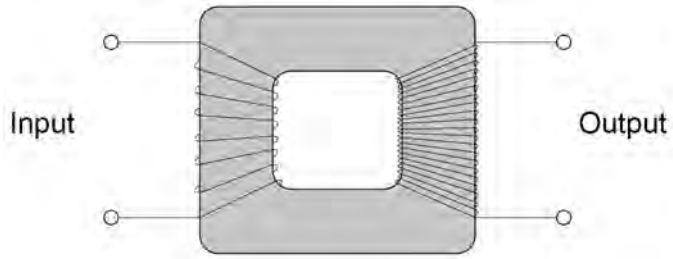

Why is the core of the transformer made from iron?

[1 mark]

Question 9 continues on the next page

4.2.3.1 Direct and alternating potential difference

Question 28 · continued

0 9 . 2 A transformer has 345 turns on the primary coil and 6000 turns on the secondary coil.

The potential difference across the secondary coil is 400 kV.

Calculate the potential difference across the primary coil.

Use the Physics Equations Sheet.

Give your answer in volts.

[4 marks]

Potential difference = _____ V

0 9 . 3 There is an alternating current in the primary coil of a transformer.

Explain why there is an alternating potential difference across the ends of the secondary coil of the transformer.

[3 marks]

8