AQA GCSE Physics | 8463

SPECIFICATION POINT 4.2.1.4

Resistors

Past-paper questions

Tier	**Higher**
Question groups	**36**
Available paper years	**2003–2024**

Using this booklet

1. Answer the questions in order and show your working.
2. Original question numbers and marks are retained.
3. Print at actual size (100%) for measuring questions.
4. Use the companion answer booklet to check your work.

Name: _____ **Date:** _____

Whole questions are retained for context, so some parts assess other specification points. Current and legacy sources are labelled. Continue on extra paper if needed.

4.2.1.4 Resistors

Question 01

June 2003 | 3451H | Original Q8 | Legacy

8 A set of Christmas tree lights is made from twenty identical lamps connected in series.

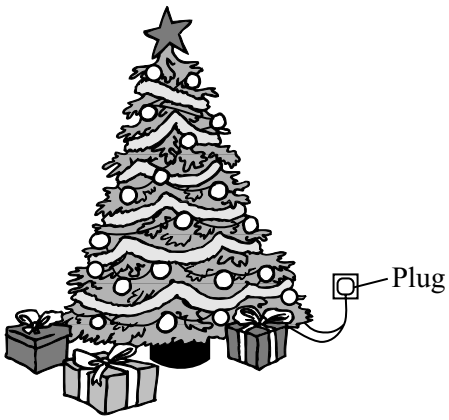

(a) Each lamp is designed to take a current of 0.25 A. The set plugs directly into the 230 V mains electricity supply.

(i) Write down the equation that links current, potential difference and resistance.

.....

(1 mark)

(ii) Calculate the resistance of **one** of the lamps. Show clearly how you work out your final answer and give the unit.

.....

.....

.....

.....

Resistance = ...

(4 marks)

(iii) What is the total resistance of the set of lights?

.....

Total resistance = ...

(1 mark)

(b) How does the resistance of a filament lamp change as the temperature of the filament changes?

.....

.....

(1 mark)

7

4.2.1.4 Resistors

Question 02

June 2003 | 3451H | Original Q15 | Legacy

15 (a) An electronic circuit in a freezer contains an alarm. This alarm will sound if the temperature inside the freezer rises above –15 °C. The alarm will also sound if the freezer door is left open for more than 45 seconds.

In the electronic circuit, name:

(i) the logic gate;

.....

(1 mark)

(ii) an input sensor which could detect the temperature rise;

.....

(1 mark)

(iii) a component which could act as a timer.

.....

(1 mark)

(b) The diagram shows a different system which could be used to switch on a security light, outside a house, at night. The diagram shows the input sensing circuit and the circuit for an output device.

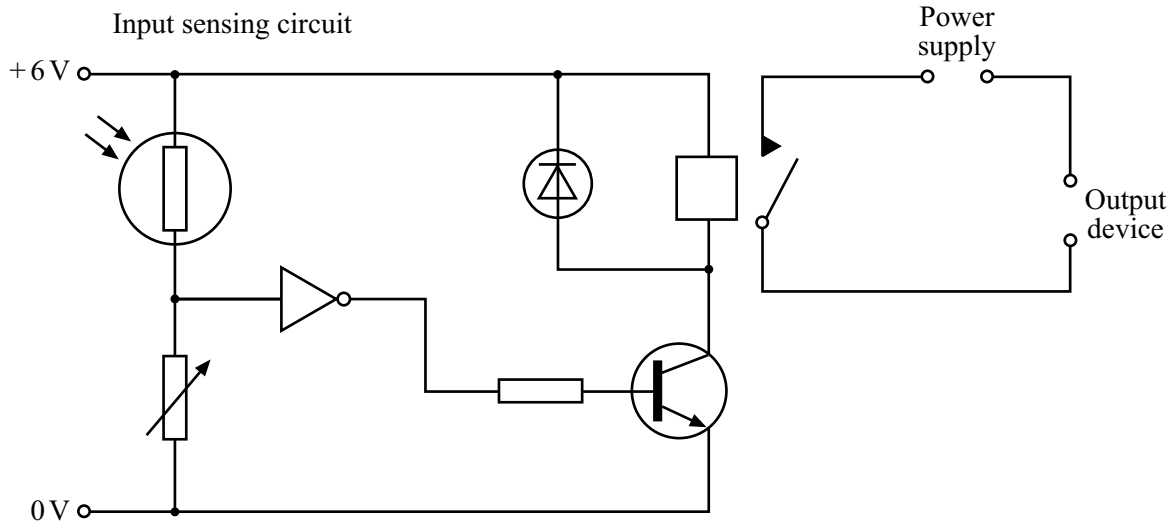

4.2.1.4 Resistors

Question 02 · continued

MARGIN BLANK

(i) Complete the **five** spaces in these sentences to give the correct order for the events which occur.

As it gets dark, the resistance of the light dependent resistor (LDR) increases. The input to the logic gate will be ..... so the output will be ..... . Then the ..... will be switched on, the ..... will be switched on and the ..... will be switched on. *(5 marks)*

(ii) Explain why a diode is included in the circuit.

.....

.....

.....

..... *(2 marks)*

(iii) Why is the diode reverse-biased?

.....

..... *(1 mark)*

(iv) The system, in the diagram, can be modified to control a garden water fountain. This can be done by changing the output device to an electric pump.

The input sensing circuit could be modified so that the water fountain would operate only during the day.

Suggest **two** alternative ways in which the input sensing circuit could be modified so that it would have this result.

1 .....

.....

2 .....

..... *(2 marks)*

13

4.2.1.4 Resistors

Question 03

June 2003 | 3462H3 | Original Q6 | Legacy

6 A set of Christmas tree lights is made from twenty identical lamps connected in series.

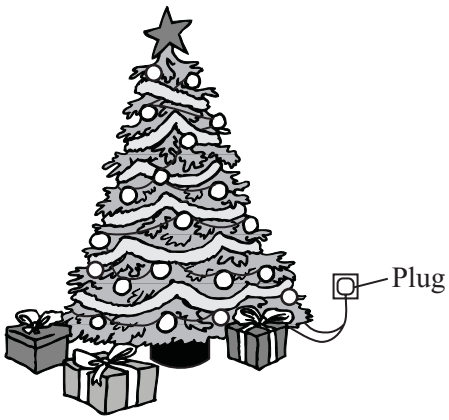

(a) Each lamp is designed to take a current of 0.25 A. The set plugs directly into the 230 V mains electricity supply.

(i) Write down the equation that links current, potential difference and resistance.

.....

(1 mark)

(ii) Calculate the resistance of **one** of the lamps. Show clearly how you work out your final answer and give the unit.

.....

.....

.....

.....

Resistance = ...

(4 marks)

(iii) What is the total resistance of the set of lights?

.....

Total resistance = ...

(1 mark)

(b) How does the resistance of a filament lamp change as the temperature of the filament changes?

.....

.....

(1 mark)

7

4.2.1.4 Resistors

Question 04

June 2004 | 3451H | Original Q1 | Legacy

1 The drawing shows the circuit used to investigate how the current through a 5 ohm (Ω) resistor changes as the potential difference (voltage) across the resistor changes.

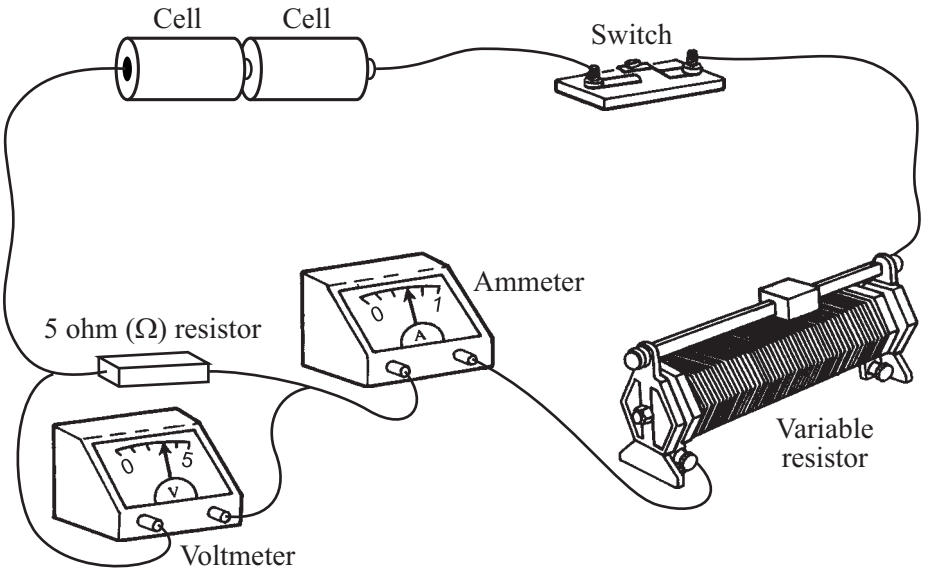

(a) Draw, in the space below, a circuit diagram of this circuit. Use the correct symbols for each part of the circuit.

(2 marks)

4.2.1.4 Resistors

Question 04 · continued

MARGIN BLANK

(b) (i) Write down the equation that links current, potential difference and resistance.

.....

(1 mark)

(ii) Calculate the potential difference across the 5 ohm (Ω) resistor when the current through the resistor equals 0.4 A. Show clearly how you work out your final answer.

.....

.....

potential difference =.....volts

(2 marks)

(iii) Complete the graph to show how the current through the resistor changes as the potential difference across the resistor increases from 0 V to 3 V. Assume the resistor stays at a constant temperature.

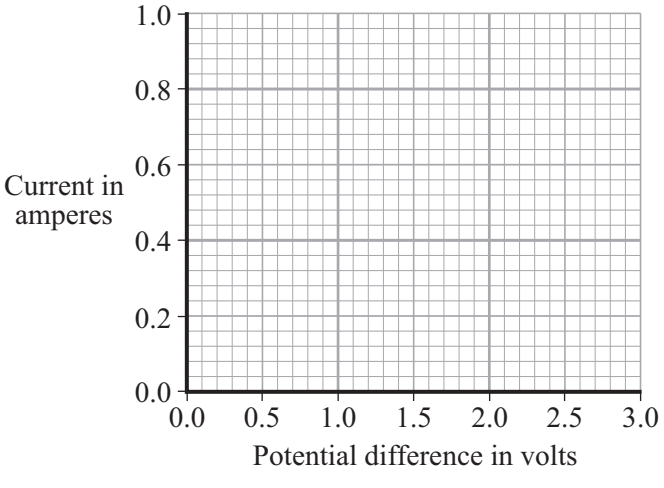

(2 marks)

(c) The resistor is replaced by a 3 V filament lamp. The resistance of the lamp increases as the potential difference across it increases. Why?

.....

.....

(1 mark)

8

4.2.1.4 Resistors

Question 05

June 2004 | 3451H | Original Q8 | Legacy

8 (a) A physics textbook says that:

"The *flow of electrons* through a circuit can be controlled by using a fixed resistor or a variable resistor."

(i) What word can be used for the *flow of electrons*?

.....

(1 mark)

(ii) The flow of electrons can also be controlled by a *thermistor*.

How is a *thermistor* affected by an increase in temperature?

.....

.....

.....

(2 marks)

(b) Draw straight lines to link each part of an electronic circuit with its description.

Part of electronic circuit	Description
input sensor	controlled by the processor
processor	detects changes in the environment
output device	decides what action is needed

(2 marks)

4.2.1.4 Resistors

Question 05 · continued

MARGIN BLANK

(c) The diagram shows part of an electronic circuit. This part is connected to the processor.

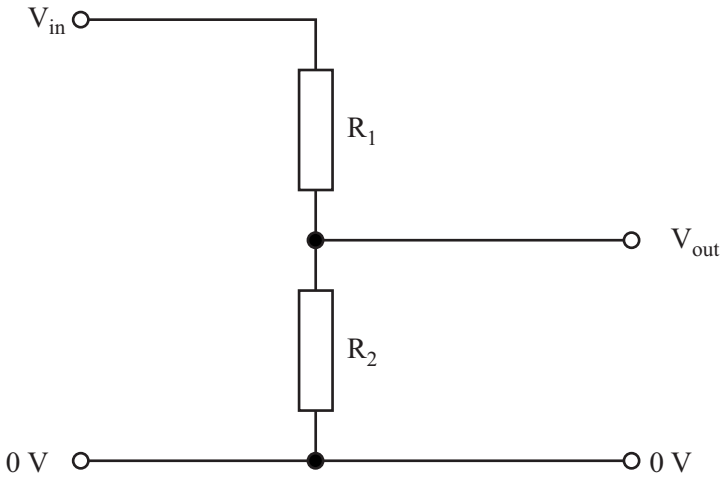

(i) What is the name of this part?

.....

(1 mark)

(ii) The input potential difference (voltage) is 6 volts, the value of R_1 is 15 ohms and the value of R_2 is 30 ohms.

Use the following equation to calculate the value of the output potential difference.

$$V_{out} = V_{in} \times \frac{R_2}{(R_1 + R_2)}$$

.....

.....

Output potential difference = ...volts

(2 marks)

(iii) The resistor R_1 is replaced by another resistor with a higher value. The resistor R_2 is not changed.

What effect will this have on:

the potential difference across the new resistor;

.....

the potential difference across R_2?

.....

(2 marks)

10

4.2.1.4 Resistors

Question 06

June 2004 | 3462H3 | Original Q1 | Legacy

1 The drawing shows the circuit used to investigate how the current through a 5 ohm (Ω) resistor changes as the potential difference (voltage) across the resistor changes.

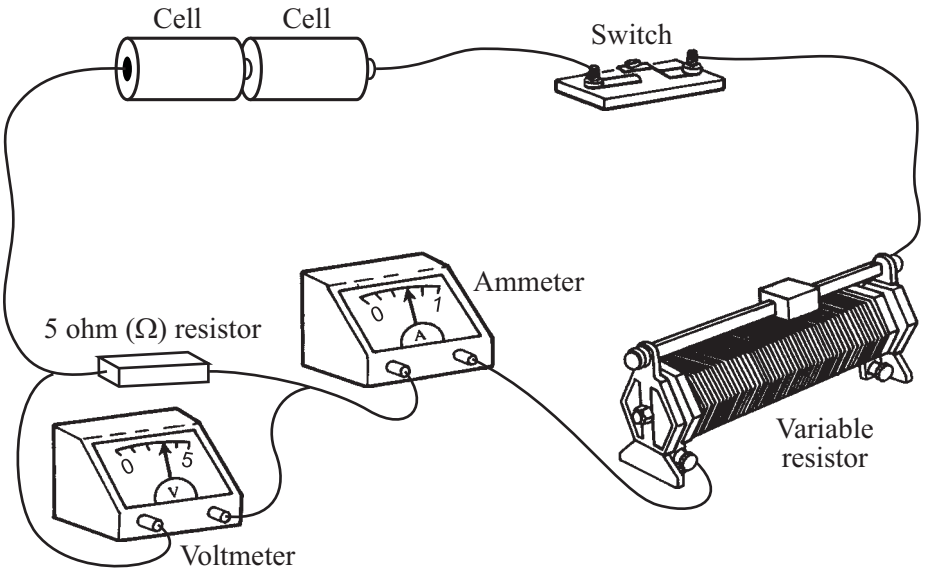

(a) Draw, in the space below, a circuit diagram of this circuit. Use the correct symbols for each part of the circuit.

(2 marks)

4.2.1.4 Resistors

Question 06 · continued

MARGIN BLANK

(b) (i) Write down the equation that links current, potential difference and resistance.

.....

(1 mark)

(ii) Calculate the potential difference across the 5 ohm (Ω) resistor when the current through the resistor equals 0.4 A. Show clearly how you work out your final answer.

.....

.....

potential difference =.....volts

(2 marks)

(iii) Complete the graph to show how the current through the resistor changes as the potential difference across the resistor increases from 0 V to 3 V. Assume the resistor stays at a constant temperature.

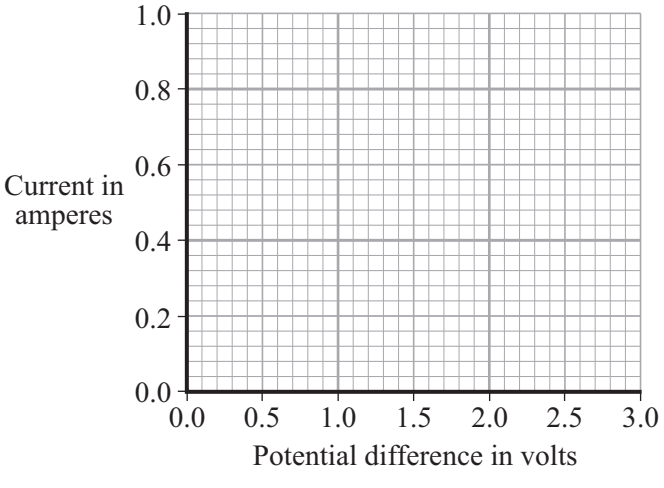

(2 marks)

(c) The resistor is replaced by a 3 V filament lamp. The resistance of the lamp increases as the potential difference across it increases. Why?

.....

.....

(1 mark)

8

4.2.1.4 Resistors

Question 07

June 2005 | 3451 | Original Q12 | Legacy

12 (a) The graph shows how the resistance of a thermistor changes with temperature.

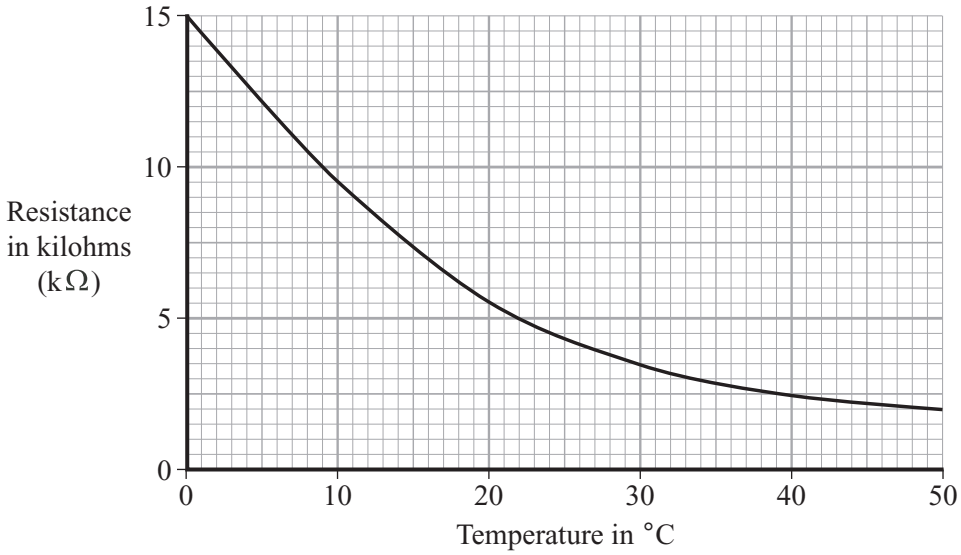

Use the graph to find:

(i) the resistance, in kΩ, of the thermistor at 18 ºC;

Resistance = ... kΩ

(1 mark)

(ii) the temperature, in ºC, when the resistance of the thermistor is 12 500 ohms (Ω).

Temperature = ... ºC

(1 mark)

(b) The diagram shows how a thermistor is used in part of an electronic circuit.

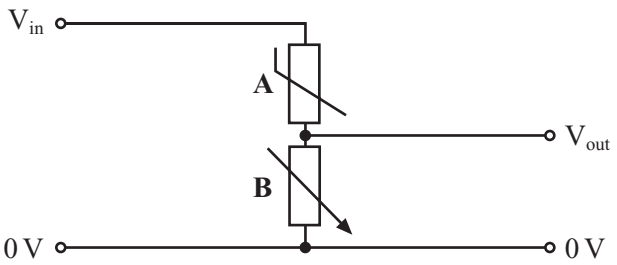

(i) Name the components **A** and **B**.

A is a ..... and **B** is a .....

(1 mark)

(ii) Name the part of the electronic circuit shown in the diagram.

.....

(1 mark)

Question 07 · continued

MARGIN BLANK

(iii) What will happen to the value of V_{out} as the temperature increases from the freezing point of water to room temperature?

.....

(1 mark)

(iv) Explain your answer to part (b)(iii).

.....

.....

.....

(2 marks)

(c) An electronic circuit switches on an output device when the temperature gets above a certain value. Name a suitable output device.

.....

(1 mark)

(d) The diagram shows an electronic circuit.

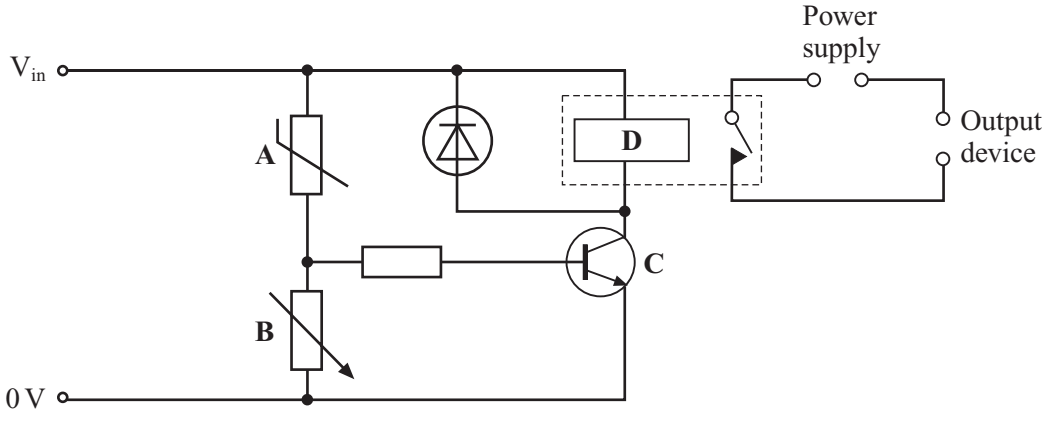

(i) Name components **C** and **D**.

C is a ..... and **D** is a .....

(2 marks)

(ii) The circuit is modified by adding a NOT gate. This makes the circuit switch on the output device when the temperature gets too low.

Describe where in the circuit the NOT gate would be put.

.....

.....

(1 mark)

Describe a use for this modified circuit.

.....

.....

(1 mark)

12

4.2.1.4 Resistors

Question 08

June 2006 | 3451 | Original Q1 | Legacy

1 The diagram shows how a student joined several components, including a 6-volt lamp and four identical 1.5 volt cells, in a circuit.

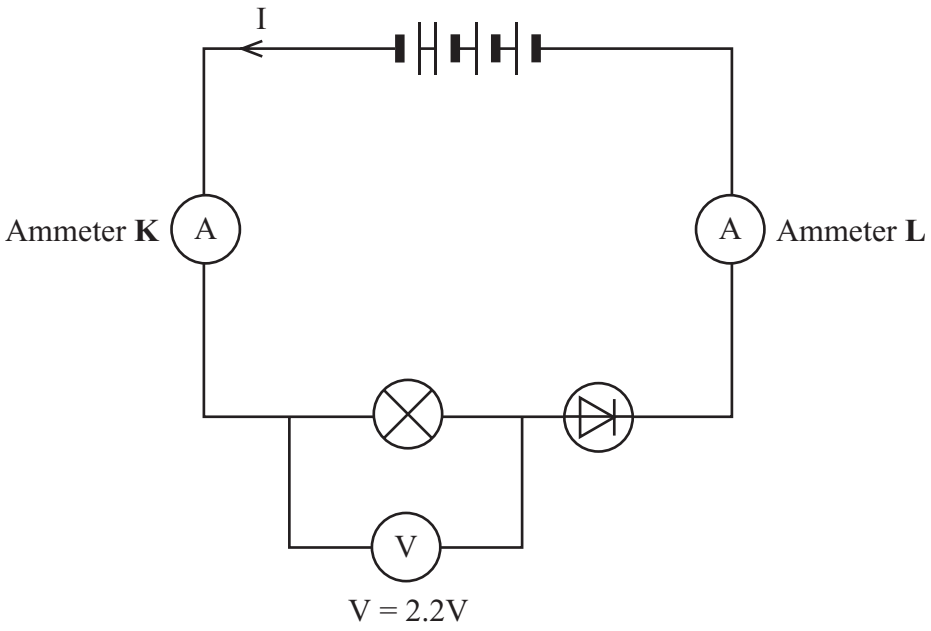

(a) The reading on ammeter **K** is 0.05 A.

What is the reading on ammeter **L**?

.....

(1 mark)

(b) The student expected the lamp in the diagram to be much brighter and the reading on the voltmeter to be 6 volts.

(i) Give **two** reasons why the reading on the voltmeter is much less than 6 volts. The voltmeter is working correctly.

1.....

.....

2.....

.....

(2 marks)

4.2.1.4 Resistors

Question 08 · continued

BLANK

(ii) The student decides that the lamp is dim because the diode is connected the wrong way round. When the student reverses the connections to the diode the lamp goes out.

Explain why.

.....

.....

.....

.....

(2 marks)

(c) The graph shows how the current through a filament lamp changes as the voltage (potential difference) across it changes.

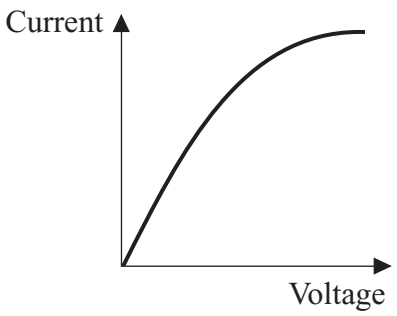

Explain why the graph is not a straight line.

To gain full marks in this question you should write your ideas in good English. Put them into a sensible order and use the correct scientific words.

.....

.....

.....

.....

.....

.....

.....

(4 marks)

9

4.2.1.4 Resistors

Question 09

June 2006 | 3451 | Original Q9 | Legacy

9 The diagram shows the circuit for a simple light meter.

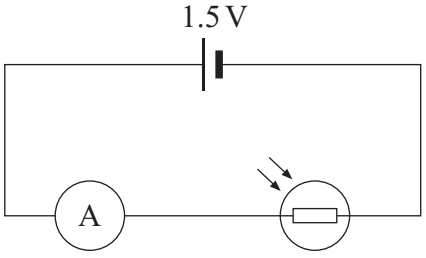

(a) The graph shows how a tennis umpire uses the light meter to decide when it is too dark for play to continue.

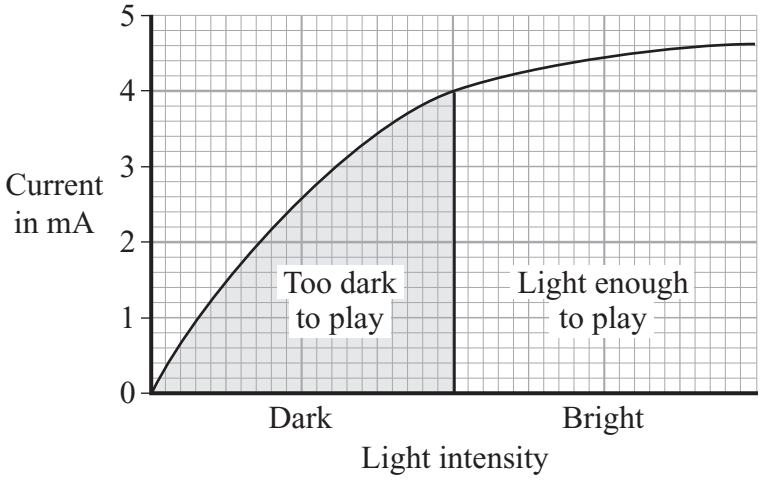

(i) Write down the equation that links current, potential difference and resistance.

.....

(1 mark)

(ii) Calculate the resistance of the light dependent resistor (LDR) at the point when it becomes too dark for play to continue.

Show clearly how you work out your answer.
(1000 mA = 1 A)

.....

.....

.....

Resistance = ... Ω

(3 marks)

4.2.1.4 Resistors

Question 09 · continued

BLANK

(b) The current-voltage (potential difference) graph for an LDR in daylight is drawn below.

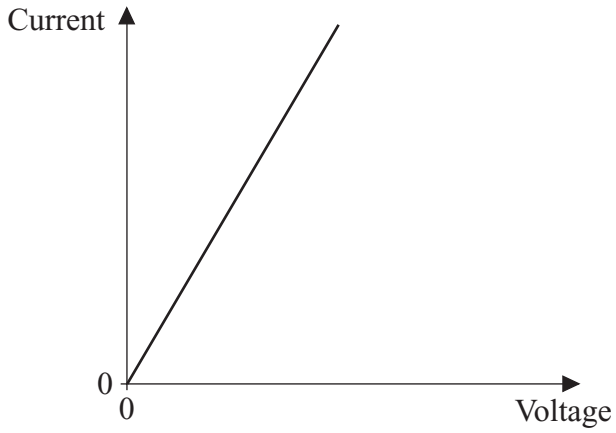

Draw a second line on the graph to show how the current may change with the voltage when the LDR is in the dark. *(1 mark)*

5

Turn over for the next question

4.2.1.4 Resistors

Question 10

June 2006 | 3462 | Original Q1 | Legacy

1 The diagram shows how a student joined several components, including a 6-volt lamp and four identical 1.5 volt cells, in a circuit.

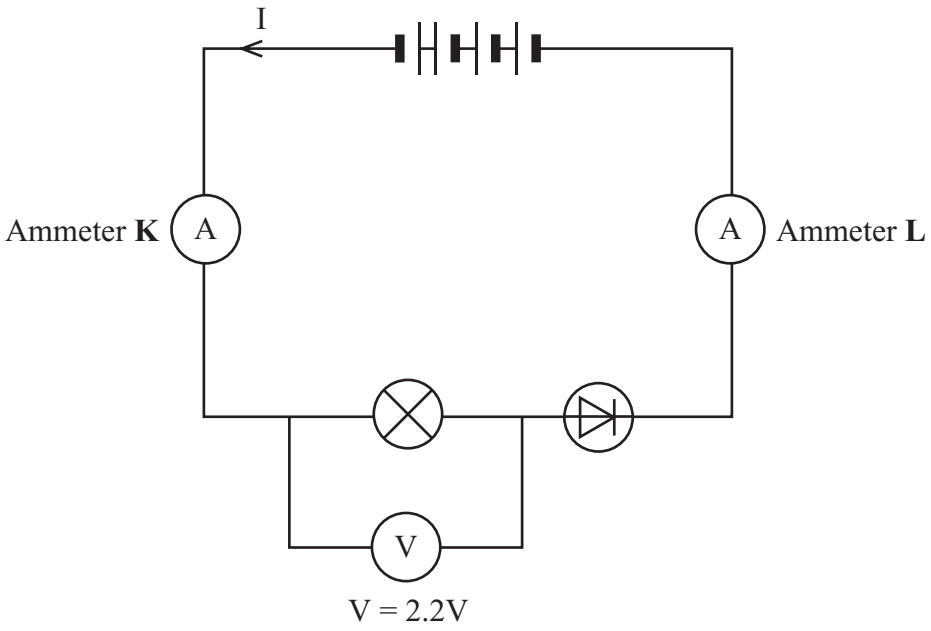

(a) The reading on ammeter **K** is 0.05 A.

What is the reading on ammeter **L**?

.....

(1 mark)

(b) The student expected the lamp in the diagram to be much brighter and the reading on the voltmeter to be 6 volts.

(i) Give **two** reasons why the reading on the voltmeter is much less than 6 volts. The voltmeter is working correctly.

1.....

.....

2.....

.....

(2 marks)

4.2.1.4 Resistors

Question 10 · continued

BLANK

(ii) The student decides that the lamp is dim because the diode is connected the wrong way round. When the student reverses the connections to the diode the lamp goes out.

Explain why.

.....

.....

.....

.....

(2 marks)

(c) The graph shows how the current through a filament lamp changes as the voltage (potential difference) across it changes.

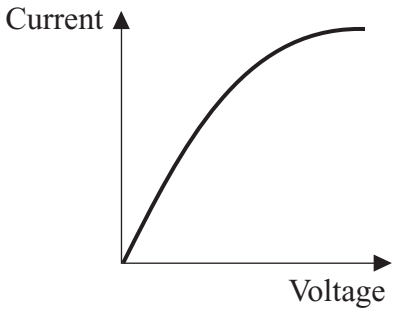

Explain why the graph is not a straight line.

To gain full marks in this question you should write your ideas in good English. Put them into a sensible order and use the correct scientific words.

.....

.....

.....

.....

.....

.....

.....

(4 marks)

9

4.2.1.4 Resistors

Question 11

June 2006 | 3462 | Original Q7 | Legacy

7 The diagram shows the circuit for a simple light meter.

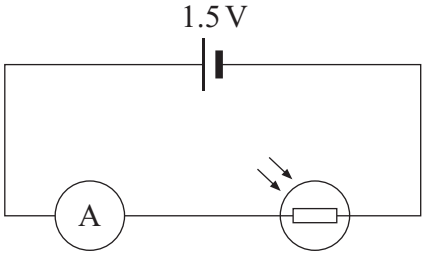

(a) The graph shows how a tennis umpire uses the light meter to decide when it is too dark for play to continue.

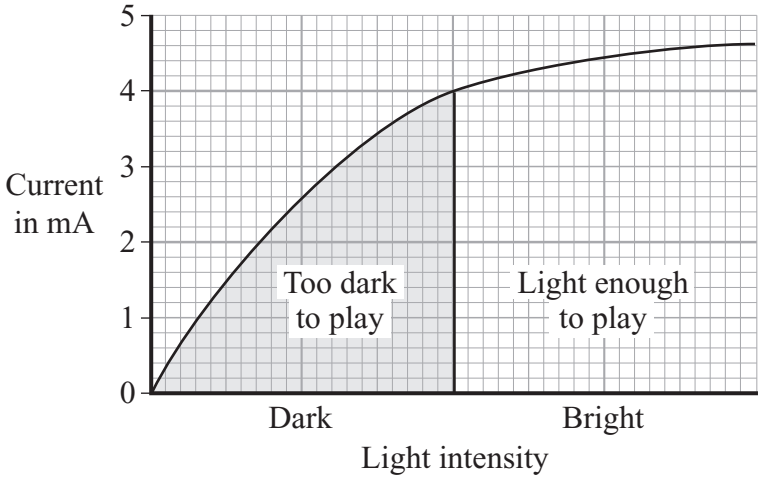

(i) Write down the equation that links current, potential difference and resistance.

.....

(1 mark)

(ii) Calculate the resistance of the light dependent resistor (LDR) at the point when it becomes too dark for play to continue.

Show clearly how you work out your answer.
(1000 mA = 1 A)

.....

.....

.....

Resistance = ... Ω

(3 marks)

4.2.1.4 Resistors

Question 11 · continued

BLANK

(b) The current-voltage (potential difference) graph for an LDR in daylight is drawn below.

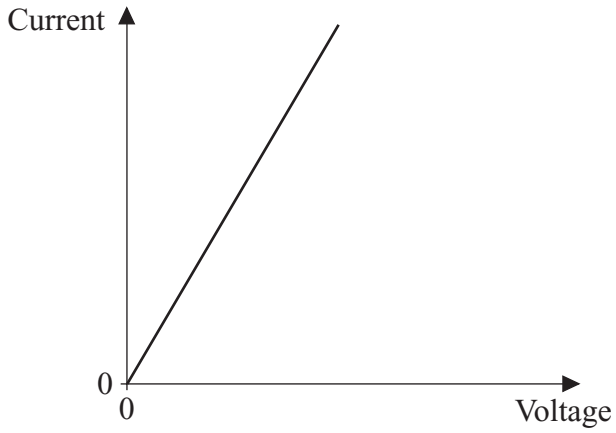

Draw a second line on the graph to show how the current may change with the voltage when the LDR is in the dark. *(1 mark)*

5

Turn over for the next question

4.2.1.4 Resistors

Question 12

November 2008 | PHY1AP | Original Q5 | Legacy

QUESTION FIVE

The diagram shows information about four types of electric lamp.

Each lamp produces the same amount of light energy in the same time.

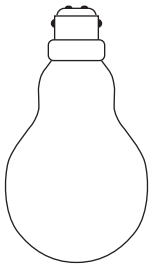

100 watt filament lamp
Average life = 1000 hours
Cost = £0.50

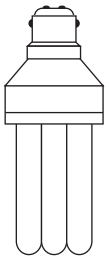

20 watt energy-saving lamp
Average life = 10 000 hours
Cost = £3.00

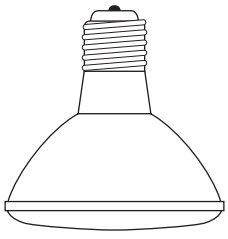

10 watt LED spotlight
Average life = 60 000 hours
Cost = £30.00

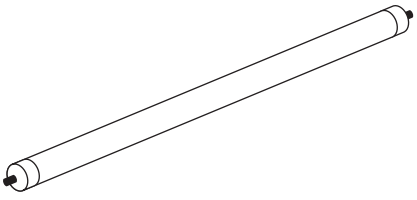

15 watt fluorescent tube
Average life = 5000 hours
Cost = £5.00

5A Which lamp is the most efficient?

1 100 watt filament lamp

2 20 watt energy-saving lamp

3 10 watt LED spotlight

4 15 watt fluorescent tube

4.2.1.4 Resistors

Question 12 · continued

5B Which lamp would get the hottest when it is working?

1 100 watt filament lamp

2 20 watt energy-saving lamp

3 10 watt LED spotlight

4 15 watt fluorescent tube

5C Which lamp would be the cheapest to run for 1000 hours?

1 100 watt filament lamp

2 20 watt energy-saving lamp

3 10 watt LED spotlight

4 15 watt fluorescent tube

5D You want a lamp that will provide light for 60 000 hours. You realise that you may have to buy more than one lamp to last this long.

Which type of lamp would work out the cheapest to buy?

1 100 watt filament lamp

2 20 watt energy-saving lamp

3 10 watt LED spotlight

4 15 watt fluorescent tube

4.2.1.4 Resistors

Question 13

March 2009 | PHY1AP | Original Q9 | Legacy

QUESTION NINE

A householder bought an energy-saving lamp. She found the following table printed on its packaging.

Power of energy-saving lamp in W	Equivalent power of filament lamp in W
5	25
9	40
11	60
15	75
20	100

The graph shows the data.

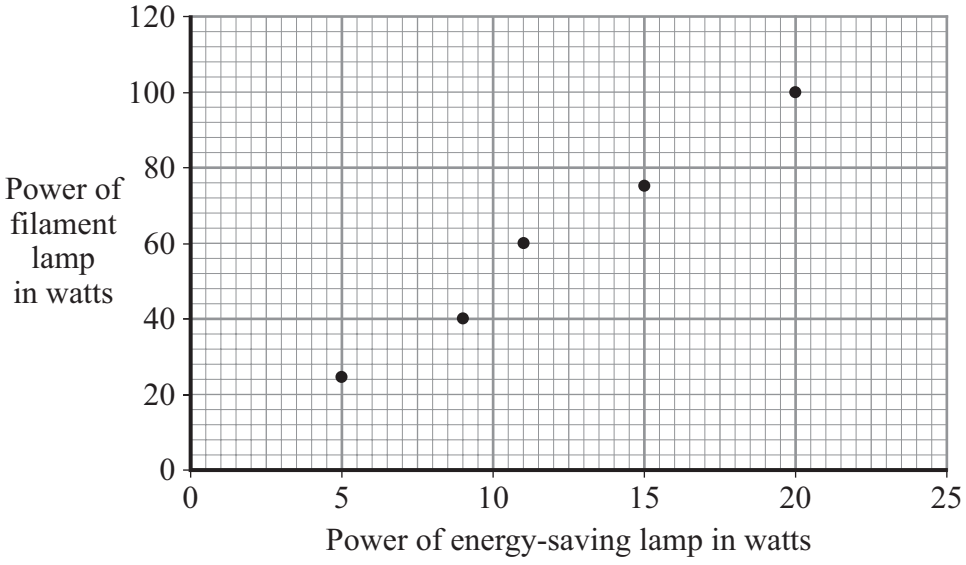

9A To see if the power of the filament lamp is directly proportional to the power of the energy-saving lamp, you should . . .

1 draw a line of best fit.

2 draw a straight line of best fit and see whether it passes through (0,0).

3 plot more points and see whether a straight line is produced.

4 produce a bar chart and see whether there is a positive relationship.

4.2.1.4 Resistors

Question 13 · continued

$$\text{efficiency} = \frac{\text{useful energy transferred by the device}}{\text{total energy supplied to the device}}$$

9B A 25 W lamp transforms 25 joules of electrical energy each second.

The efficiency of a 25 W energy-saving lamp is 0.6

How much energy does it waste each second?

1 10.0 J

2 15.0 J

3 41.2 J

4 62.5 J

9C The efficiency of a 100 W filament lamp is 0.15

From the data in the table on page 30, what is the approximate efficiency of the 20 W energy-saving lamp?

1 0.03

2 0.15

3 0.30

4 0.75

9D The government has recommended that the sale of filament lamps should be stopped.

Why is this?

1 to give shops new products to sell

2 to use less fuel for generating electricity

3 to make electricity cheaper to buy

4 to give householders brighter lamps

END OF TEST

4.2.1.4 Resistors

Question 14

June 2009 | PHY1AP | Original Q7 | Legacy

QUESTION SEVEN

The table compares data for two types of lamp.

	Filament lamp	Compact fluorescent lamp (CFL)
Cost	80p	£3.00
Efficiency	0.2	0.8
Expected life	1000 hours	8000 hours

7A People may decide **not** to buy CFLs because CFLs are . . .

1 more expensive to buy.

2 more efficient.

3 cheaper to run.

4 longer lasting.

7B A filament lamp with a power rating of 100 W gives 2000 units of light.

What power rating would a CFL need to provide 2000 units of light?

1 8000 W

2 20 W

3 25 W

4 25 kW

4.2.1.4 Resistors

Question 14 · continued

energy transferred (kilowatt-hour, kWh)	=	power (kilowatt, kW)	×	time (hour, h)

total cost	=	number of kilowatt-hours	×	cost per kilowatt-hour

Electricity costs 15 p per kWh

7C What will be the cost of using a 100 W filament lamp during its expected life?

1 £1.50

2 £15.00

3 £150.00

4 £1500.00

7D In its lifetime, a security light is used for 15 000 hours.

How much would you expect to spend on buying CFLs for the security light in that time?

1 £5.63

2 £6.00

3 £12.00

4 £45.00

4.2.1.4 Resistors

Question 15

June 2009 | PHY3H | Original Q2 | Legacy

2 The diagram shows some parts of a torch which works without batteries.
The coil is part of a complete circuit with the LED (light-emitting diode).

You have to shake the torch for a short time and then it is ready to use.

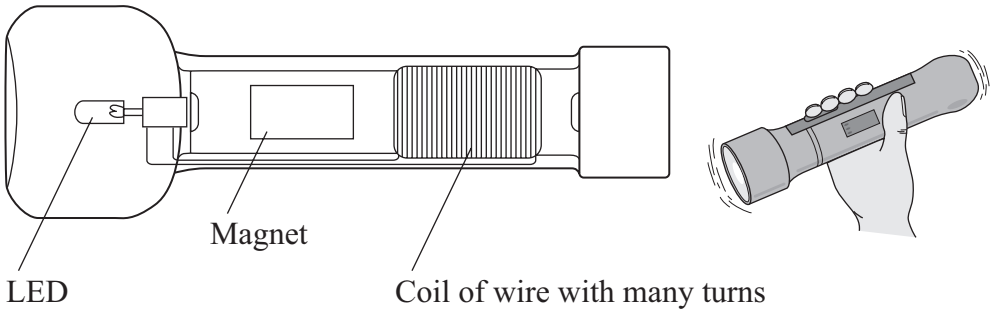

2 (a) Arrange the letters, **A**, **B**, **C**, **D** and **E**, in the correct order to explain how shaking the torch produces an electric current.

A An electric current is induced in the circuit.

B The magnetic field cuts through the coil.

C The magnet moves in and out of the coil.

D A potential difference (p.d.) is induced across the ends of the coil.

E The torch is shaken to and fro.

The first letter has been done for you.

E				

(2 marks)

2 (b) Give **two** changes which you would make to the design of the torch to increase the size of the induced potential difference.

1 .....

.....

2 .....

.....

(2 marks)

4.2.1.4 Resistors

Question 15 · continued

for mark

2 (c) A few minutes after shaking, the LED gets dimmer and then stops giving out light.

A student tests the torch. She shakes it for a period of time. Then she switches it on and times how long the light lasts.

These are her results.

Period of time torch is shaken measured in seconds	How long the light lasts measured in seconds
30	168
60	312
90	420
120	546
150	654

2 (c) (i) What conclusion can the student come to on the basis of these results?

.....

.....

(1 mark)

2 (c) (ii) The student's friend says that the results are **not** reliable. Her friend is correct.

Give **two** reasons why.

1 .....

.....

.....

2 .....

.....

.....

(2 marks)

7

4.2.1.4 Resistors

Question 16

November 2009 | PHY1AP | Original Q2 | Legacy

QUESTION TWO

The diagram shows a torch which contains a rechargeable battery. The battery is recharged by winding the handle.

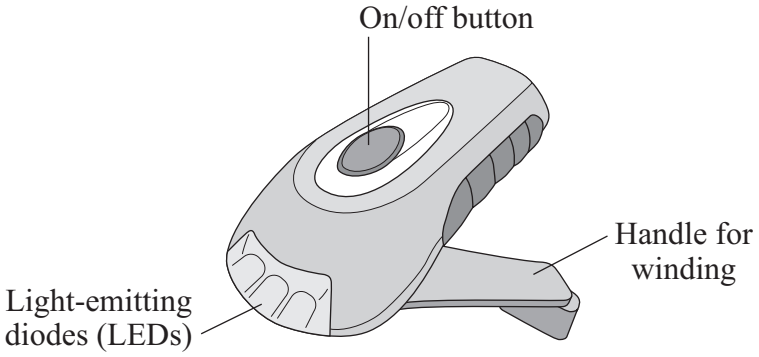

Match words, **A**, **B**, **C** and **D**, with the numbers **1–4** in the sentences.

A chemical

B electrical

C kinetic

D light

When the user winds the handle, the useful energy transformation is from . . . **1** . . . energy to . . . **2** . . energy which is stored in the battery.

When the torch is switched on, the useful output from the battery is . . . **3** . . . energy and the useful output from the LEDs is . . . **4** . . . energy.

4.2.1.4 Resistors

Question 17

January 2010 | PHY2H | Original Q4 | Legacy

4 The diagram shows a simple light-sensing circuit.

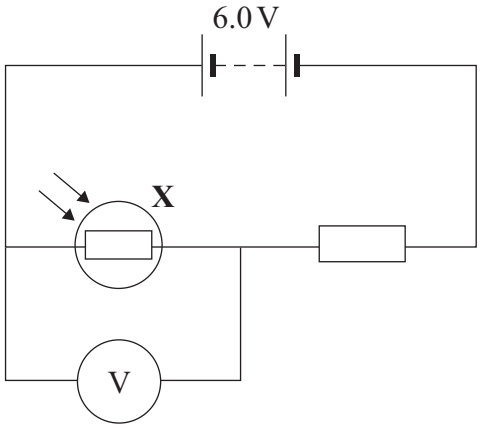

4 (a) The graph, supplied by the manufacturer, shows how the resistance of the component labelled **X** varies with light intensity.

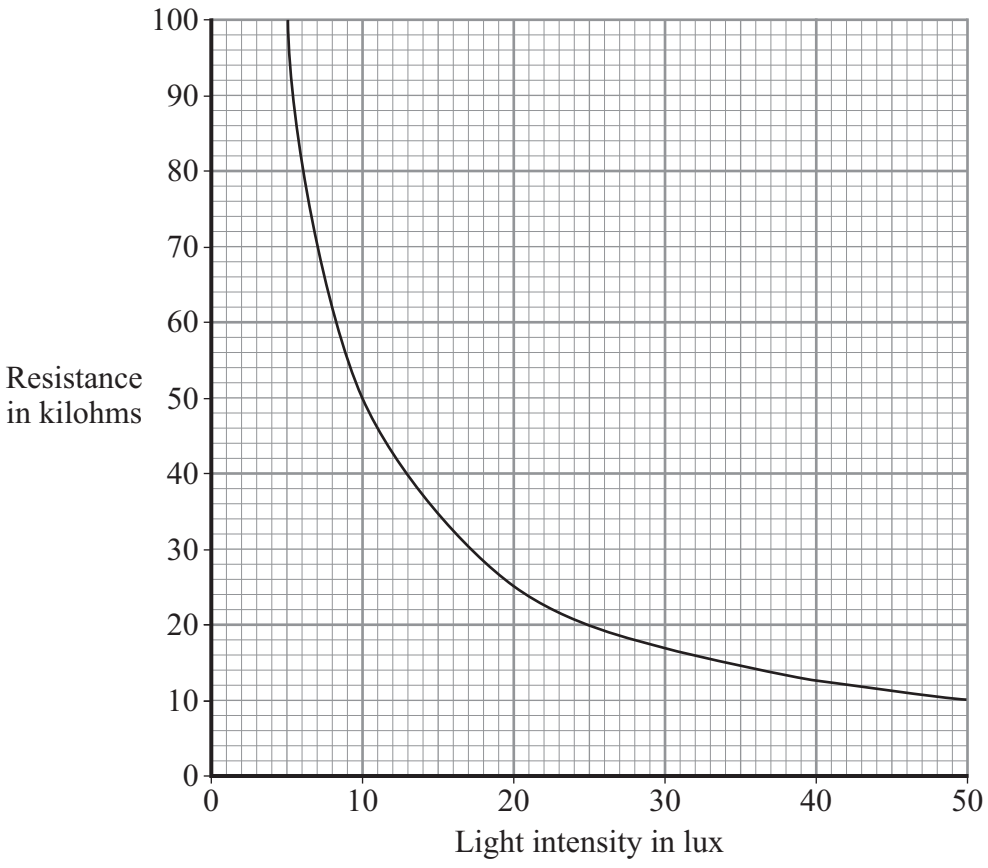

4.2.1.4 Resistors

Question 17 · continued

for mark

4 (a) (i) What is component **X**?

.....

(1 mark)

4 (a) (ii) Use the graph to find the resistance of component **X** when the light intensity is 20 lux.

.....

(1 mark)

4 (a) (iii) When the light intensity is 20 lux, the current through the circuit is 0.0002 A.

Use the equation in the box to calculate the reading on the voltmeter when the light intensity is 20 lux.

potential difference = current × resistance

Show clearly how you work out your answer.

.....

.....

Voltmeter reading = ... volts

(2 marks)

Question 4 continues on the next page

4.2.1.4 Resistors

Question 17 · continued

for mark

4 (b) Use the grid below to show how the voltmeter reading in the light-sensing circuit varies with light intensity.

4 (b) (i) Add a suitable scale to the *y*-axis (vertical axis).

(1 mark)

4 (b) (ii) Complete the sketch graph by drawing a line on the grid to show how the voltmeter reading will vary with light intensity.

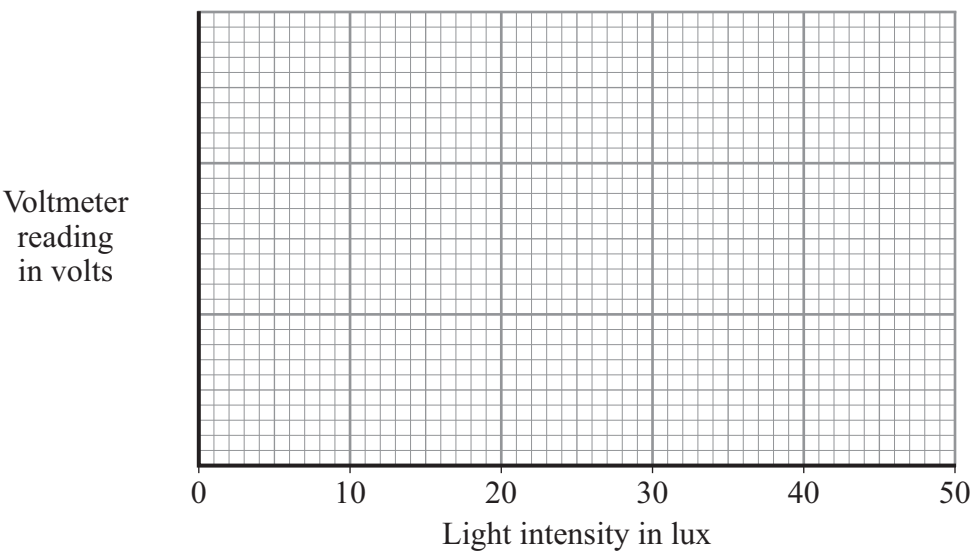

(2 marks)

4 (c) The following passage is taken from the technical data supplied for component **X** by the manufacturer.

> For any given light intensity, the resistance of this component can vary by plus or minus 50% of the value shown on the **graph of light intensity and resistance**.

4 (c) (i) Calculate the maximum resistance that component **X** could have at 20 lux light intensity.

.....

Maximum resistance = ... kilohms

(1 mark)

4 (c) (ii) Explain why this light-sensing circuit would **not** be used to measure values of light intensity.

.....

.....

.....

(2 marks)

10

4.2.1.4 Resistors

Question 18

March 2010 | PHY1AP | Original Q4 | Legacy

QUESTION FOUR

The diagram shows a compact fluorescent lamp (CFL).

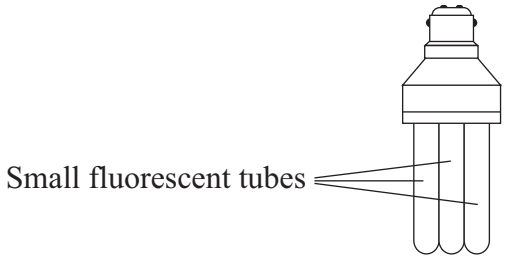

The graph shows the electrical power of a CFL compared with a filament lamp and a halogen lamp.

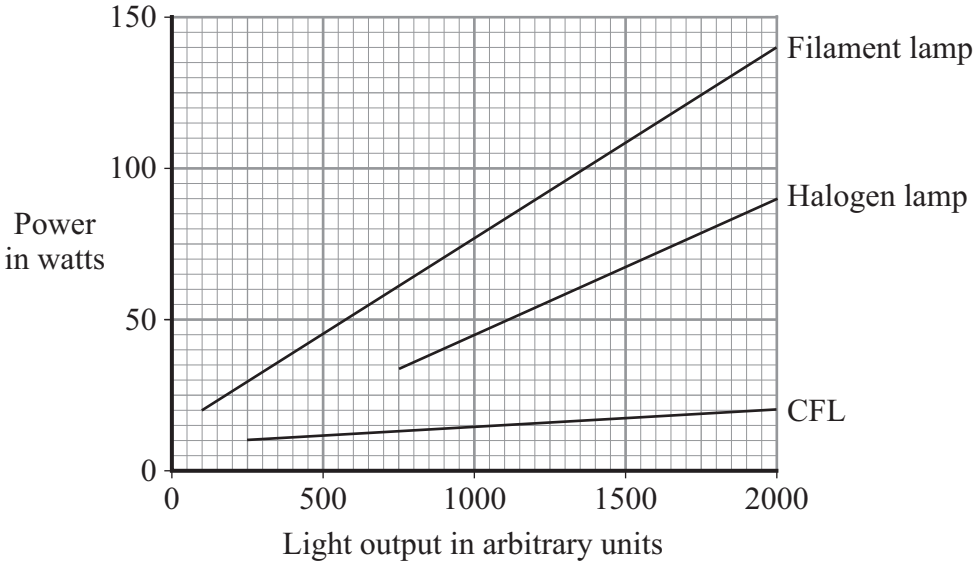

4A How much power does a halogen lamp need in order to give an output of 1000 units of light?

1 40 watts

2 45 watts

3 50 watts

4 55 watts

4.2.1.4 Resistors

Question 18 · continued

4B How many more watts of power would a filament lamp need, compared with a halogen lamp, to produce 2000 units of light?

1 40

2 50

3 70

4 120

4C What happens to the extra energy that the filament lamp uses compared with the halogen lamp?

The extra energy . . .

1 is stored in the filament of the lamp.

2 is transferred as heat to the surroundings.

3 is used to produce a chemical reaction in the lamp.

4 returns to the electricity supply.

4D In some countries, governments are making it compulsory to use CFLs rather than filament lamps.

What is the reason for this?

1 CFLs are more powerful than filament lamps.

2 CFLs can give out much more light than filament lamps.

3 CFLs can heat the room as well as light it.

4 CFLs save energy because they are more efficient.

4.2.1.4 Resistors

Question 19

June 2010 | PHY1AP | Original Q4 | Legacy

QUESTION FOUR

The UK government has decided that filament lamps must be replaced by energy-saving lamps. Some people want to continue using filament lamps. Below are some of the arguments for using each type of lamp.

Filament lamps	Energy-saving lamps
• Filament lamps cost only 42 p; energy-saving lamps are more expensive. • Filament lamps reach full brightness almost immediately; energy-saving lamps take a long time to warm up. • The extra heat given out from a filament lamp helps to warm the room.	• An 11 watt energy-saving lamp gives as much light as a 60 watt filament lamp. • Energy-saving lamps produce very little waste energy; filament lamps have an efficiency of only 0.1. • Energy-saving lamps are cheaper to use. • Energy-saving lamps last about 7 times longer than filament lamps.

4A Filament lamps are less efficient than energy-saving lamps.

This means that they . . .

1 cost less.

2 do not last as long.

3 have a larger input power for the same light output.

4 reach full brightness straight away.

The graph shows the total cost of buying and using each type of lamp.

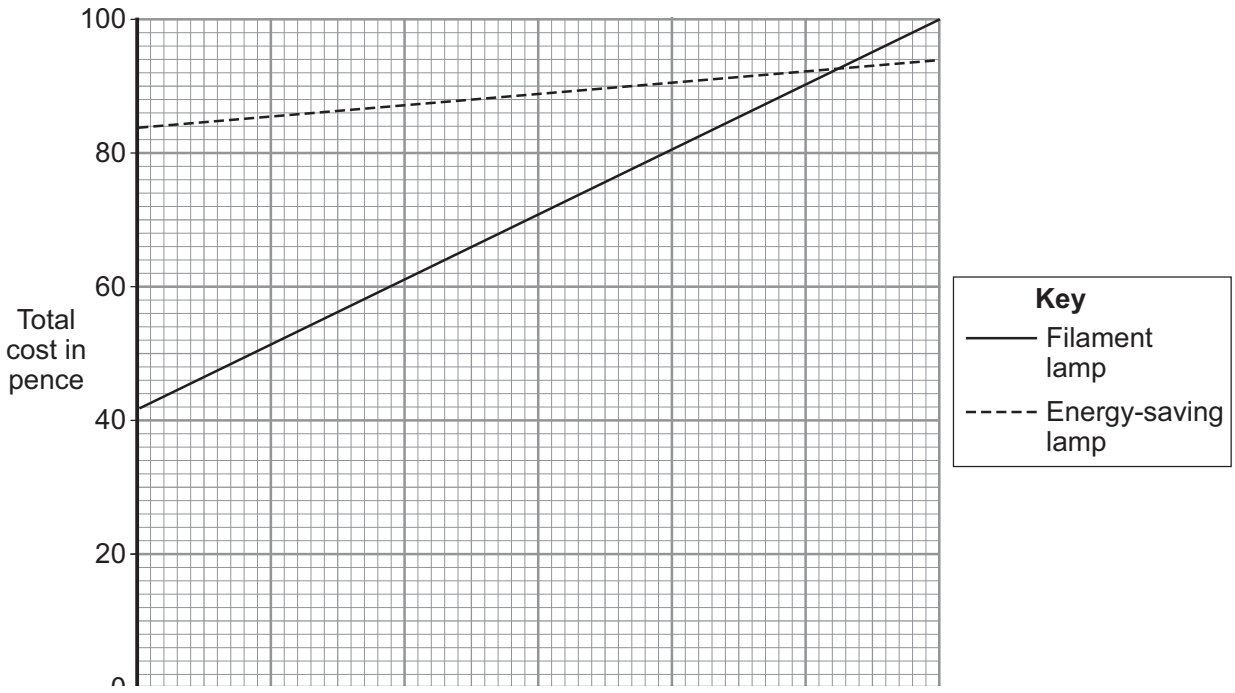

4.2.1.4 Resistors

Question 19 · continued

4B The graph shows that the cost of buying an energy-saving lamp compared with buying a filament lamp is . . .

1 half as much.

2 twice as much.

3 the same.

4 four times as much.

4C An energy-saving lamp becomes more economical than a filament lamp after . . .

1 86 hours of use.

2 93 hours of use.

3 103 hours of use.

4 105 hours of use.

4D Supporters of filament lamps believe that the 'waste' heat from each lamp is used to heat their houses. They believe that this saves on their heating costs. They say that the total energy used to **light and heat** their houses would not be reduced by using energy-saving lamps.

To find out if they are correct, it is necessary to compare the costs . . .

1 in a small house using filament lamps and in a large house using energy-saving lamps.

2 in a small house using energy-saving lamps and in a large house using filament lamps.

3 using two identical houses with filament lamps in one and energy-saving lamps in the other.

4 using some filament lamps and some energy-saving lamps in the same house.

4.2.1.4 Resistors

Question 20

January 2011 | PHY2H | Original Q6 | Legacy

6 A set of lights consists of 20 lamps connected in series to the 230 V mains electricity supply.

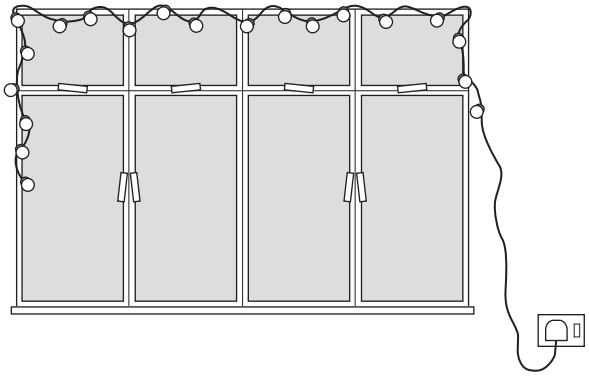

6 (a) When the lights are switched on and working correctly, the current through each lamp is 0.25 A.

6 (a) (i) What is the total current drawn from the mains supply?

.....

(1 mark)

6 (a) (ii) Use the equation in the box to calculate the charge passing through **one** of the lamps in 5 minutes.

charge = current × time

Show clearly how you work out your answer and give the unit.

.....

.....

.....

.....

Total charge = ...

(3 marks)

4.2.1.4 Resistors

Question 20 · continued

6 (b) One of the lamps in the set is a fuse lamp. This contains a filament which melts if a fault occurs. A short time after the lights are switched on, a fault causes the filament inside the fuse lamp to melt and all the lamps go out.

The householder cannot find another fuse lamp so connects a piece of aluminium foil across the contacts inside the fuse lamp holder.
When switched on, the nineteen remaining lamps work.
What the householder has done is dangerous.

Explain why.

.....

.....

.....

.....

(2 marks)

6

Turn over for the next question

4.2.1.4 Resistors

Question 21

March 2011 | PHY1AP | Original Q1 | Legacy

QUESTION ONE

The diagram shows a compact fluorescent lamp (CFL).

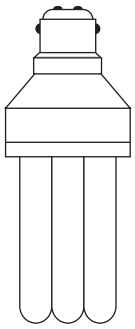

Match words, **A**, **B**, **C** and **D**, with the numbers **1**–**4** in the sentences.

A economical

B efficient

C environmental

D ethical

Compared with a filament lamp, a CFL transforms less electrical energy to produce the same amount of light energy each second. This makes the CFL more . . . **1** . . . .

Over time, CFLs cost less to buy and use, making them more . . . **2** . . . than filament lamps.

CFLs contain mercury and their disposal causes . . . **3** . . . problems.

Society must decide whether or not it is . . . **4** . . . to use CFLs even if there is a possible hazard to health.

4.2.1.4 Resistors

Question 22

March 2011 | PHY1AP | Original Q7 | Legacy

QUESTION SEVEN

The table is taken from an advert for low-energy lamps.

Save up to 80 % of your electricity bill by switching to low-energy lamps		
Filament lamp	**Equivalent low-energy lamp**	**Power saving**
60 W	12 W	80 %
60 W	15 W	
100 W	20 W	80 %
100 W	24 W	76 %

7A A householder changes from using a 60 W filament lamp to using a 15 W low-energy lamp.

What is the percentage power saving made?

1 20 %

2 45 %

3 75 %

4 80 %

A 20 W low-energy lamp provides the same amount of light each second as a 100 W filament lamp.

7B The efficiency of a 100 W filament lamp is 0.15.

What is the efficiency of the 20 W low-energy lamp?

1 0.03

2 0.15

3 0.30

4 0.75

4.2.1.4 Resistors

Question 22 · continued

7C How much money is saved over 200 hours by replacing a 100 W filament lamp with a 20 W low-energy lamp?

total cost	=	number of kilowatt-hours	×	cost per kilowatt-hour

Electricity costs 15p per kWh

1 48p

2 60p

3 £2.40

4 £3.00

7D A householder is considering changing all her filament lamps for low-energy lamps. However, she says that the table in the advert does not contain enough information for her to know how much money she will save.

She needs to know . . .

1 how much each lamp costs and how long it lasts.

2 how long each lamp lasts and how much electricity costs per kWh.

3 how much electricity costs per kWh and how much each lamp costs.

4 how much each lamp costs, how long each lamp lasts and how much electricity costs per kWh.

4.2.1.4 Resistors

Question 23

November 2011 | PHY1AP | Original Q5 | Legacy

QUESTION FIVE

A householder bought an energy-saving lamp. The following table was printed on the box.

Power of energy-saving lamp in W	Equivalent power of filament lamp in W
8	40
12	60
15	75
20	100

5A The graph shows the data given in the table.

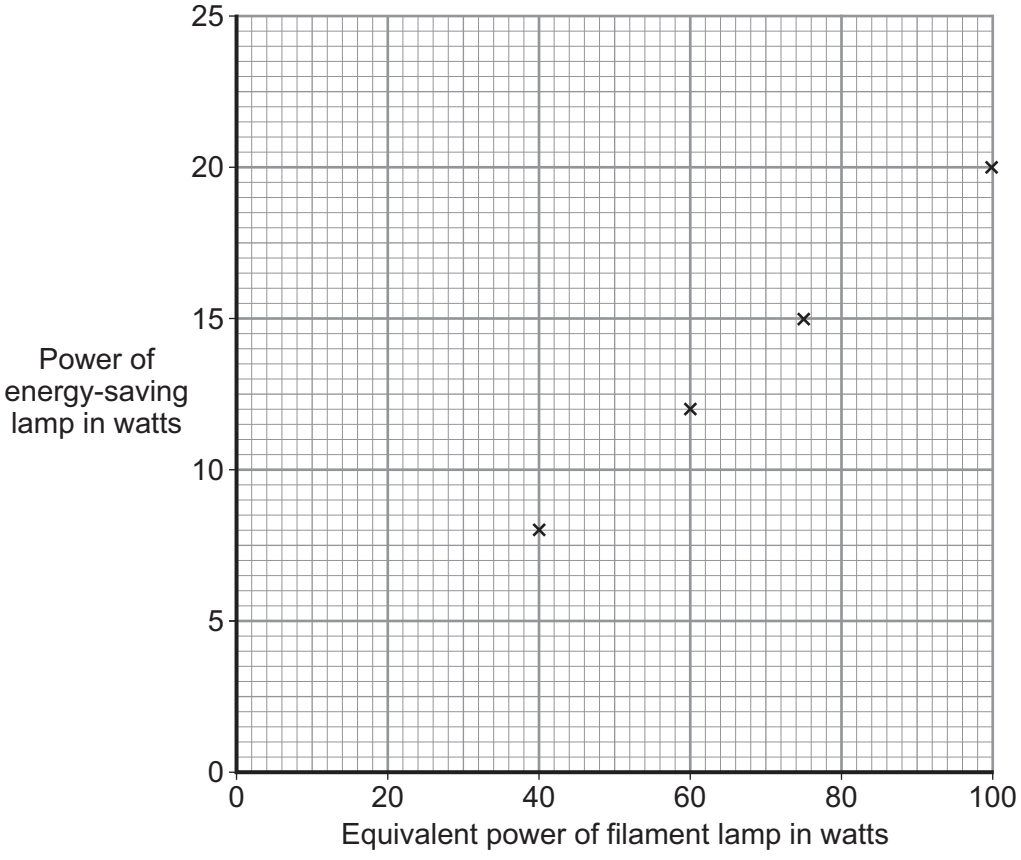

To see if the power of the filament lamp is directly proportional to the power of the energy-saving lamp, you should . . .

1 draw a line of best fit and see if it passes through (0,0).

2 change the watts to kilowatts.

3 produce a bar chart.

4 use a different scale.

Question 23 · continued

5B Assume that the power of the filament lamp is directly proportional to the power of the energy-saving lamp.

What is the power of an energy-saving lamp that is equivalent to a 150 W filament lamp?

1 8 W

2 18 W

3 30 W

4 35 W

5C The efficiency of a 100 W filament lamp is 0.15.

What is the efficiency of a 20 W energy-saving lamp?

1 0.03

2 0.15

3 0.30

4 0.75

5D The government has decided to stop the sale of filament lamps. This is to save on the amount of fuel needed for making electricity.

Most energy-saving lamps contain toxic chemicals. Safety campaigners say that energy-saving lamps must be disposed of carefully.

Which row in the table correctly describes the types of issue given above that concern the government and safety campaigners?

	The Government	Safety campaigners
1	environmental	economic
2	economic	environmental
3	ethical	social
4	social	ethical

4.2.1.4 Resistors

Question 24

June 2012 | PH2HP | Original Q5 | Legacy

5 The graph shows how the electric current through a 12 V filament bulb varies with the potential difference across the bulb.

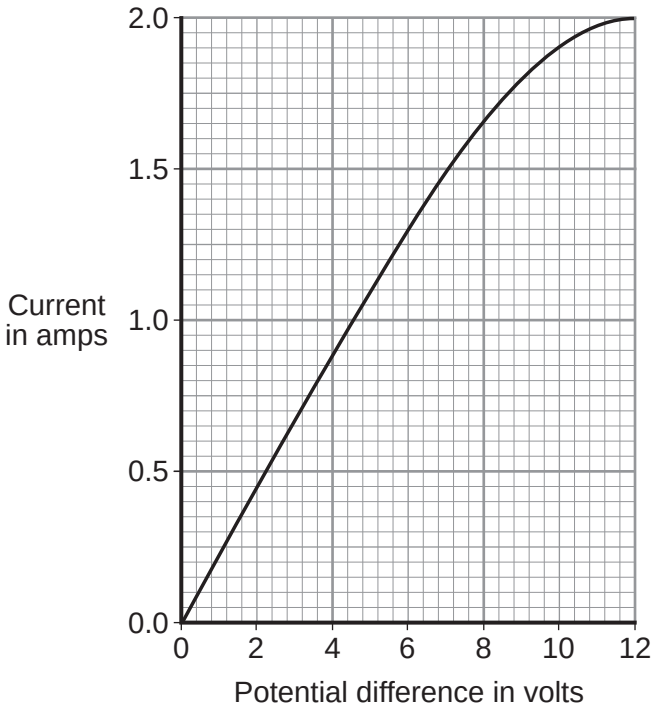

5 (a) What is the meaning of the following terms?

electric current

.....

.....

potential difference

.....

.....

(2 marks)

4.2.1.4 Resistors

Question 24 · continued

5 (b) The resistance of the metal filament inside the bulb increases as the potential difference across the bulb increases.

Explain why.

.....

.....

.....

.....

.....

.....

.....

.....

(3 marks)

5 (c) Use data from the graph to calculate the rate at which the filament bulb transfers energy, when the potential difference across the bulb is 6 V.

Use the correct equation from the Physics Equations Sheet.

Show clearly how you work out your answer.

.....

.....

Rate of energy transfer = ... W

(2 marks)

7

4.2.1.4 Resistors

Question 25

January 2013 | PH2HP | Original Q4 | Legacy

4 (a) A student set up the circuit shown in the diagram. The student uses the circuit to obtain the data needed to plot a current - potential difference graph for a diode.

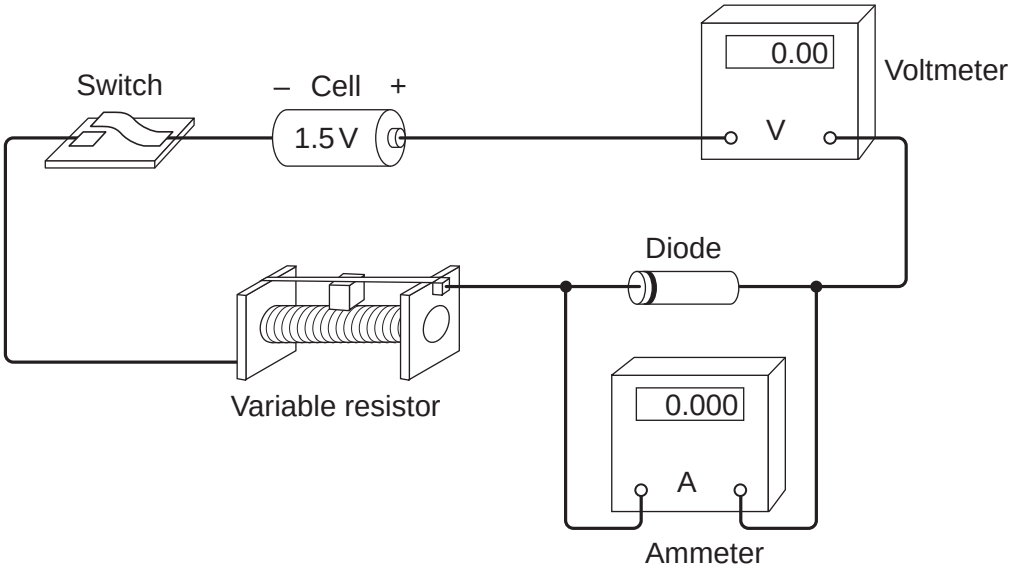

4 (a) (i) Draw, in the boxes, the circuit symbol for a diode and the circuit symbol for a variable resistor.

Diode	**Variable resistor**

(2 marks)

4 (a) (ii) The student made two mistakes when setting up the circuit.

What **two** mistakes did the student make?

1 .....

.....

2 .....

.....

(2 marks)

4.2.1.4 Resistors

Question 25 · continued

4 (b) After correcting the circuit, the student obtained a set of data and plotted the graph below.

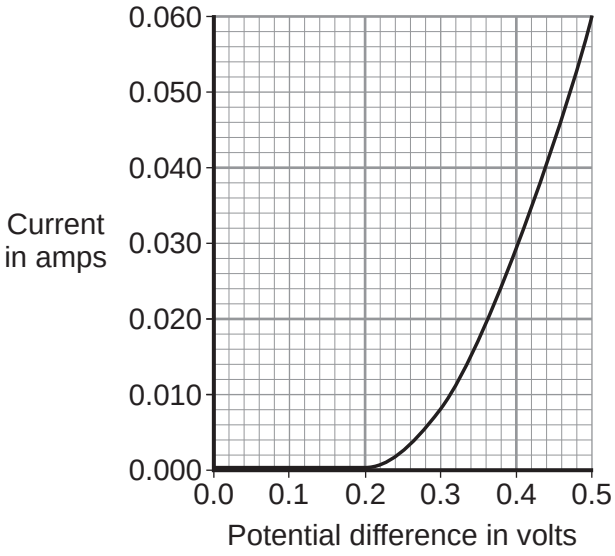

4 (b) (i) At what potential difference did the diode start to conduct an electric current?

..... V
(1 mark)

4 (b) (ii) Use data from the graph to calculate the resistance of the diode when the potential difference across the diode is 0.3 V.

Use the correct equation from the Physics Equations Sheet.

.....

.....

.....

Resistance = ... ohms
(3 marks)

Question 4 continues on the next page

4.2.1.4 Resistors

Question 25 · continued

4 (c) The diagram shows the trace produced by an alternating current (a.c.) supply on an oscilloscope.

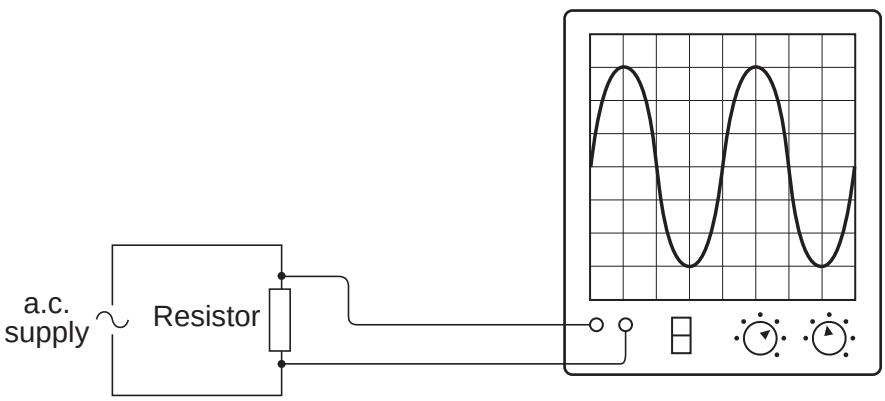

Each horizontal division on the oscilloscope screen represents a time of 0.01s.

4 (c) (i) Calculate the frequency of the a.c. supply.

.....

.....

.....

Frequency = ... hertz
(2 marks)

4.2.1.4 Resistors

Question 25 · continued

4 (c) (ii) A diode is now connected in series with the a.c. power supply.

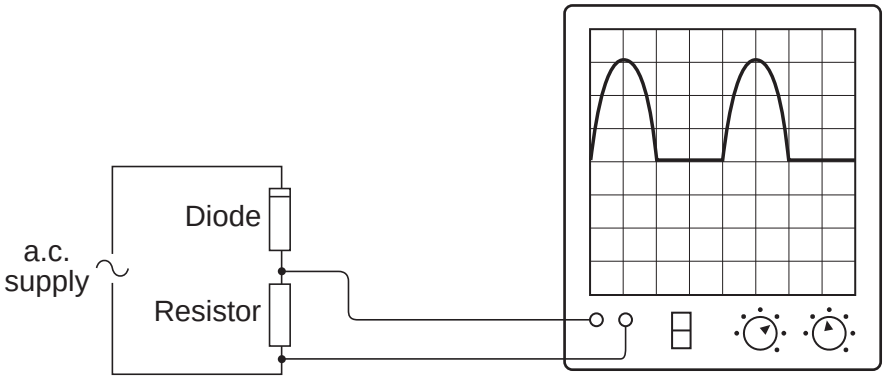

Why does the diode cause the trace on the oscilloscope screen to change?

.....

.....

.....

.....

(2 marks)

12

4.2.1.4 Resistors

Question 26

January 2013 | PH2HP | Original Q6 | Legacy

6 The diagram shows the structure of a cable. The cable is part of an undersoil heating circuit inside a large greenhouse.

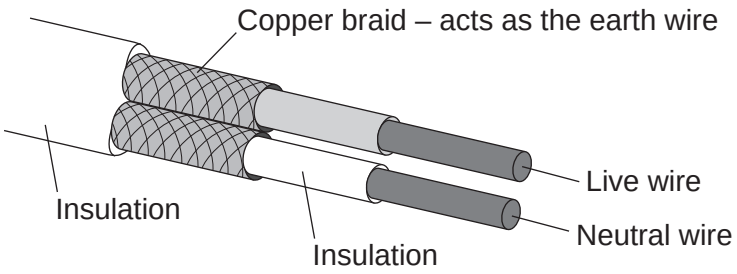

6 (a) The cable is connected to the mains electricity supply through a residual current circuit breaker (RCCB). If the cable is accidentally cut the RCCB automatically switches the circuit off.

6 (a) (i) What is the frequency of the mains electricity supply in the UK?

.....

(1 mark)

6 (a) (ii) What happens, as the cable is cut, to cause the RCCB to switch the circuit off?

.....

.....

.....

.....

(2 marks)

6 (a) (iii) A circuit can also be switched off by the action of a fuse.

Give **one** advantage of using a RCCB to switch off a circuit rather than a fuse.

.....

.....

(1 mark)

4.2.1.4 Resistors

Question 26 · continued

6 (b) The 230 volt mains electricity supply causes a current of 11 amps to flow through the cable.

6 (b) (i) Calculate the amount of charge that flows through the cable when the cable is switched on for 2 hours and give the unit.

Use the correct equation from the Physics Equations Sheet.

.....

.....

.....

Charge = ...

(3 marks)

6 (b) (ii) Calculate the energy transferred from the cable to the soil in 2 hours.

Use the correct equation from the Physics Equations Sheet.

.....

.....

Energy transferred =..... J

(2 marks)

6 (c) The heating circuit includes a thermistor. The thermistor is buried in the soil and acts as a thermostat to control the increase in the temperature of the soil.

Describe how an **increase** in the temperature of the soil affects the thermistor.

.....

.....

.....

.....

(2 marks)

11

4.2.1.4 Resistors

Question 27

June 2013 | PH2HP | Original Q2 | Legacy

2 (a) The diagram shows the circuit used to obtain the data needed to plot the current–potential difference graph for a filament bulb.

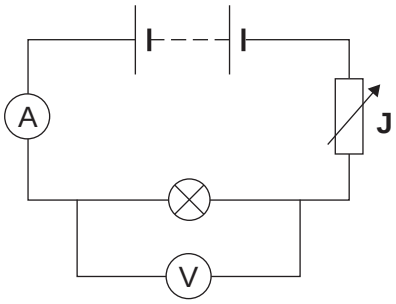

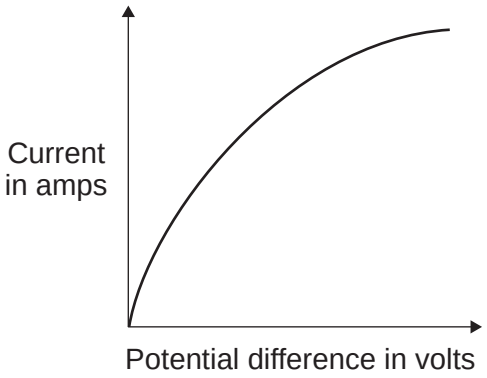

2 (a) (i) Why is the component labelled '**J**' included in the circuit?

.....

.....

(1 mark)

2 (a) (ii) The resistance of the bulb increases as the potential difference across the bulb increases. Why?

.....

.....

(1 mark)

2 (a) (iii) The bulb is at full brightness when the potential difference across the bulb is 12 V. The current through the bulb is then 3 A.

Calculate the power of the bulb when it is at full brightness and give the unit.

Use the correct equation from the Physics Equations Sheet.

.....

.....

.....

Power = ...

(3 marks)

4.2.1.4 Resistors

Question 27 · continued

2 (b) *In this question you will be assessed on using good English, organising information clearly and using specialist terms where appropriate.*

The table gives data about two types of light bulb people may use in their homes.

Type of light bulb	Energy efficiency	Cost of one light bulb	Average lifetime in hours
Halogen	10%	£1.95	2 000
Light Emitting Diode (LED)	32%	£11.70	36 000

Both types of light bulb produce the same amount of light.

Evaluate, in terms of cost and energy efficiency, the use of the two types of light bulb.

To gain full marks you must compare both types of light bulb and conclude which light bulb would be the best to use.

.....

.....

.....

.....

.....

.....

.....

.....

.....

.....

.....

.....

.....

.....

.....

(6 marks)

11

4.2.1.4 Resistors

Question 28

June 2014 | PH2HP | Original Q4 | Legacy

4 (a) **Figure 4** shows the apparatus used to obtain the data needed to calculate the resistance of a thermistor at different temperatures.

Figure 4

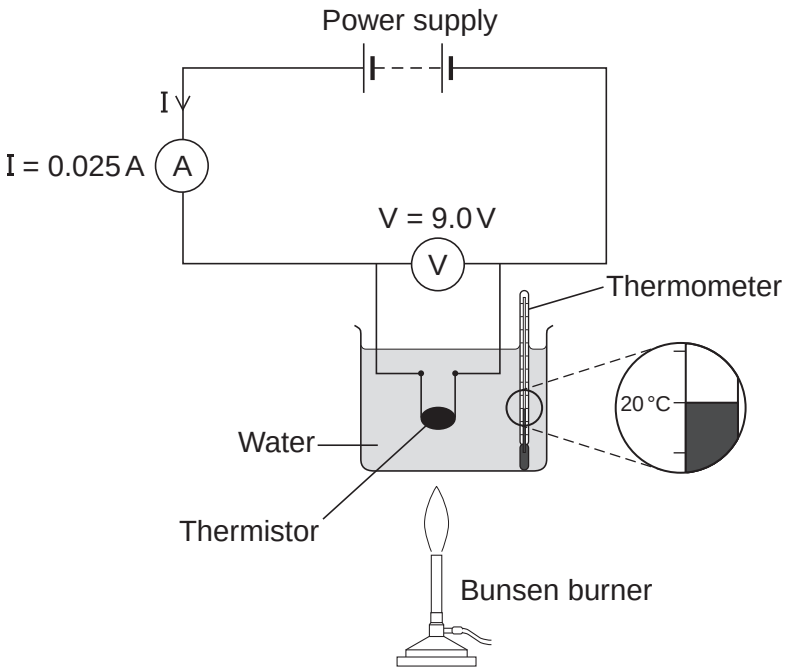

4 (a) (i) In the box below, draw the circuit symbol for a thermistor.

[1 mark]

4 (a) (ii) Use the data given in **Figure 4** to calculate the resistance of the thermistor at 20 °C.

Use the correct equation from the Physics Equations Sheet.

[2 marks]

.....

.....

.....

Resistance = ... ohms

Question 4 continues on the next page

4.2.1.4 Resistors

Question 28 · continued

4 (a) (iii) **Figure 5** shows the axes for a sketch graph.

Complete **Figure 5** to show how the resistance of the thermistor will change as the temperature of the thermistor increases from 20 °C to 100 °C.

[1 mark]

Figure 5

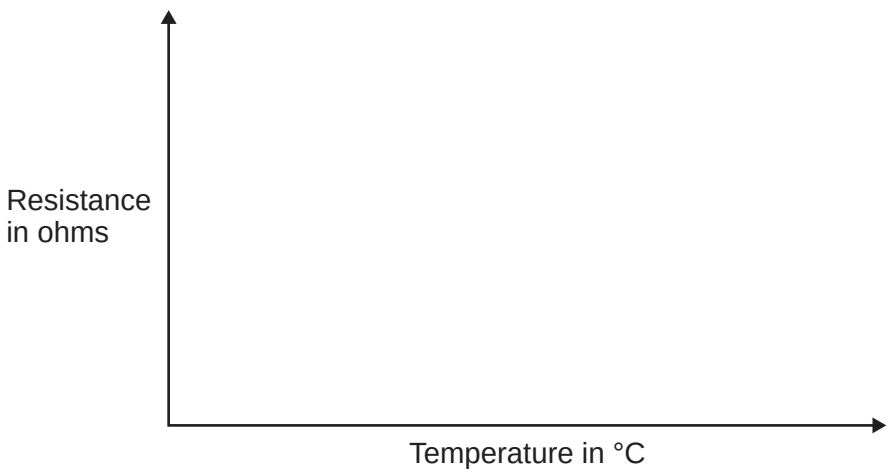

4 (a) (iv) Which **one** of the following is most likely to include a thermistor?

Tick (✓) **one** box.

[1 mark]

An automatic circuit to switch a plant watering system on and off. ☐

An automatic circuit to switch an outside light on when it gets dark. ☐

An automatic circuit to switch a heating system on and off. ☐

4 (b) The ammeter used in the circuit has a very low resistance.

Why is it important that ammeters have a very low resistance?

[1 mark]

.....

.....

4.2.1.4 Resistors

Question 28 · continued

4 (c) **Table 2** gives the temperature of boiling water using three different temperature scales.

Table 2

Temperature	Scale
100	Celsius (°C)
212	Fahrenheit (°F)
80	Réaumur (°Re)

Scientists in different countries use the same temperature scale to measure temperature.

Suggest **one** advantage of doing this.

[1 mark]

.....

.....

.....

4 (d) A student plans to investigate how the resistance of a light-dependent resistor (LDR) changes with light intensity.

The student starts with the apparatus shown in **Figure 4** but makes three changes to the apparatus.

One of the changes the student makes is to replace the thermistor with an LDR.

Describe what other changes the student should make to the apparatus.

[2 marks]

.....

.....

.....

.....

9

4.2.1.4 Resistors

Question 29

June 2015 | PH2HP | Original Q5 | Legacy

5 A 12 V filament bulb is connected to a 12 V power supply.
Figure 6 shows how the current changes after the bulb is switched on.

Figure 6

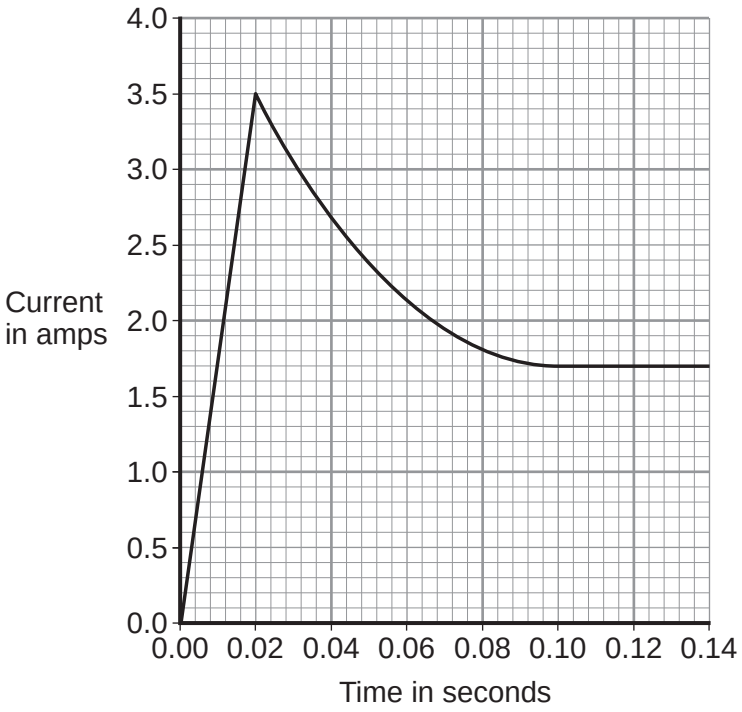

5 (a) (i) After 0.10 seconds, the bulb works at its normal brightness.

What is the current through the bulb when it is working at normal brightness?

[1 mark]

Current = ... A

5 (a) (ii) The bulb works at normal brightness for 30 seconds before it is switched off.

Calculate the charge that flows through the bulb in the 30 seconds before it is switched off. Give the unit.

Use the correct equation from the Physics Equations Sheet.

[3 marks]

.....

.....

.....

Charge = ... unit .....

4.2.1.4 Resistors

Question 29 · continued

5 (a) (iii) Calculate the energy transferred by the 12 V bulb when it is working at normal brightness for 30 seconds.

Use the correct equation from the Physics Equations Sheet.

[2 marks]

.....

.....

Energy transferred = ... J

5 (b) Between 0.02 seconds and 0.08 seconds, there is an increase in both the resistance and the temperature of the metal filament inside the bulb.

Explain, in terms of the electrons and ions inside the filament, why both the temperature and the resistance increase.

[2 marks]

.....

.....

.....

.....

.....

.....

8

4.2.1.4 Resistors

Question 30

June 2017 | PH2HP | Original Q5 | Legacy

5 The lighting in a home may be provided by LED bulbs, filament bulbs or halogen bulbs.

5 (a) (i) In the box below, draw the circuit symbol for an LED.

[1 mark]

5 (a) (ii) **Figure 6** shows how the power output from one type of LED varies with the potential difference across the LED.

Figure 6

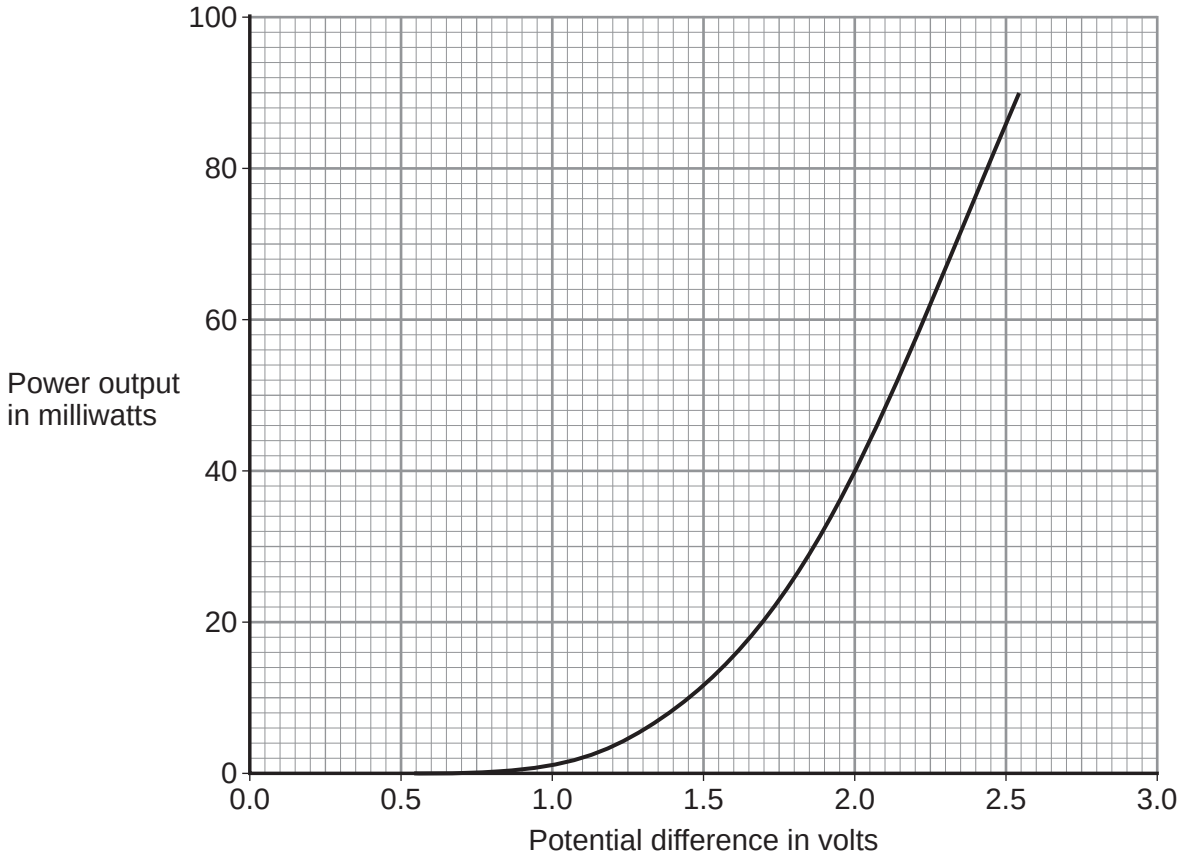

1 milliwatt = 0.001 W

4.2.1.4 Resistors

Question 30 · continued

The LED is connected in series with a battery and resistor.
The potential difference across the LED is 2.0 V

Use data from **Figure 6** to calculate the energy transferred by the LED in 5 minutes.

Use the correct equation from the Physics Equations Sheet.

[3 marks]

Energy transferred = _____ J

5 (b) The resistance of a filament bulb increases as the temperature of the filament increases.

Explain, in terms of the electrons and ions inside the filament, why the resistance increases.

[2 marks]

5 (c) Why are LED bulbs cheaper to use than filament bulbs or halogen bulbs that produce the same brightness of light?

[1 mark]

7

4.2.1.4 Resistors

Question 31

June 2018 | 8463/1H | Original Q5

0 5 . 1 Complete the sentence. Choose answers from the box.

[2 marks]

charge	**potential difference**	**power**	**temperature**	**time**

The current through an ohmic conductor is directly proportional to the _____ across the component, provided that the _____ remains constant.

0 5 . 2 **Figure 7** shows a current – potential difference graph for a filament lamp.

Figure 7

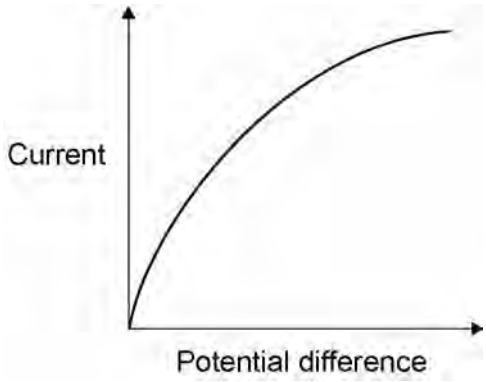

Explain how the resistance of a filament lamp changes as the potential difference across it increases.

[3 marks]

4.2.1.4 Resistors

Question 31 · continued

0 5 . 3 Many householders are replacing their filament lamps with LED lamps which are more energy efficient.

What does more energy efficient mean?

[1 mark]

Question 5 continues on the next page

4.2.1.4 Resistors

Question 31 · continued

A Light Dependent Resistor (LDR) is used to turn on an outside lamp when it gets dark.

Part of the circuit is shown in **Figure 8**.

Figure 8

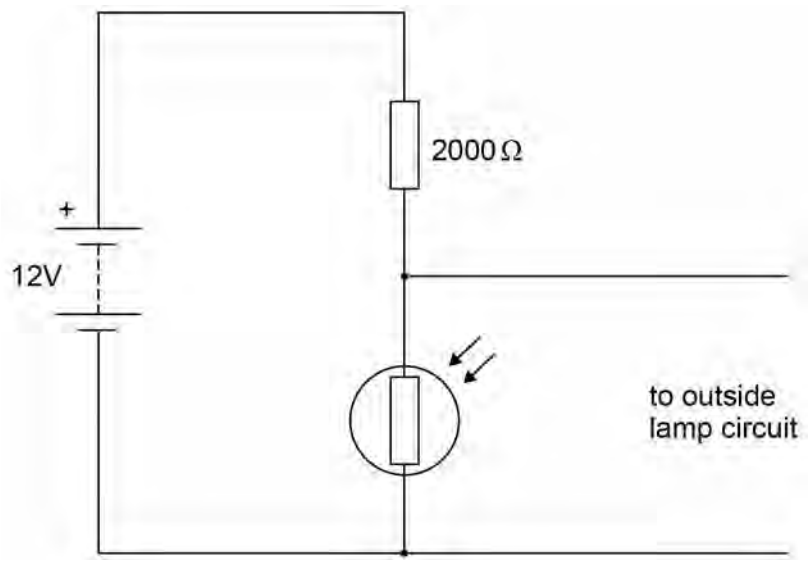

0 5 . 4 The light intensity decreases.

What happens to the potential difference across the LDR and the current in the LDR?

[2 marks]

Potential difference _____

Current _____

0 5 . 5 What is the resistance of the LDR when the potential difference across it is 4 V?

Give a reason for your answer.

[2 marks]

Resistance = _____ Ω

Reason _____

_____

_____

4.2.1.4 Resistors

Question 31 · continued

0 5 . 6 Calculate the current through the LDR when the resistance of the LDR is 5000 Ω.

Give your answer to 2 significant figures.

[4 marks]

Current = _____ A

14

Turn over for the next question

4.2.1.4 Resistors

Question 32

November 2020 | 8463/1H | Original Q1

0 1 A student investigated how the current in a filament lamp varied with the potential difference across the filament lamp.

Figure 1 shows part of the circuit used.

Figure 1

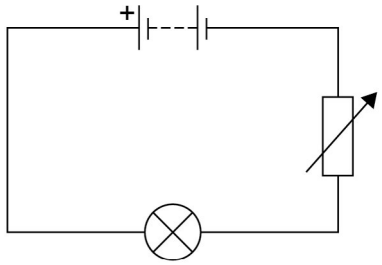

0 1 . 1 Complete **Figure 1** by adding an ammeter and a voltmeter.

Use the correct circuit symbols.

[3 marks]

Question 1 continues on the next page

4.2.1.4 Resistors

Question 32 · continued

Figure 2 shows some of the results.

Figure 2

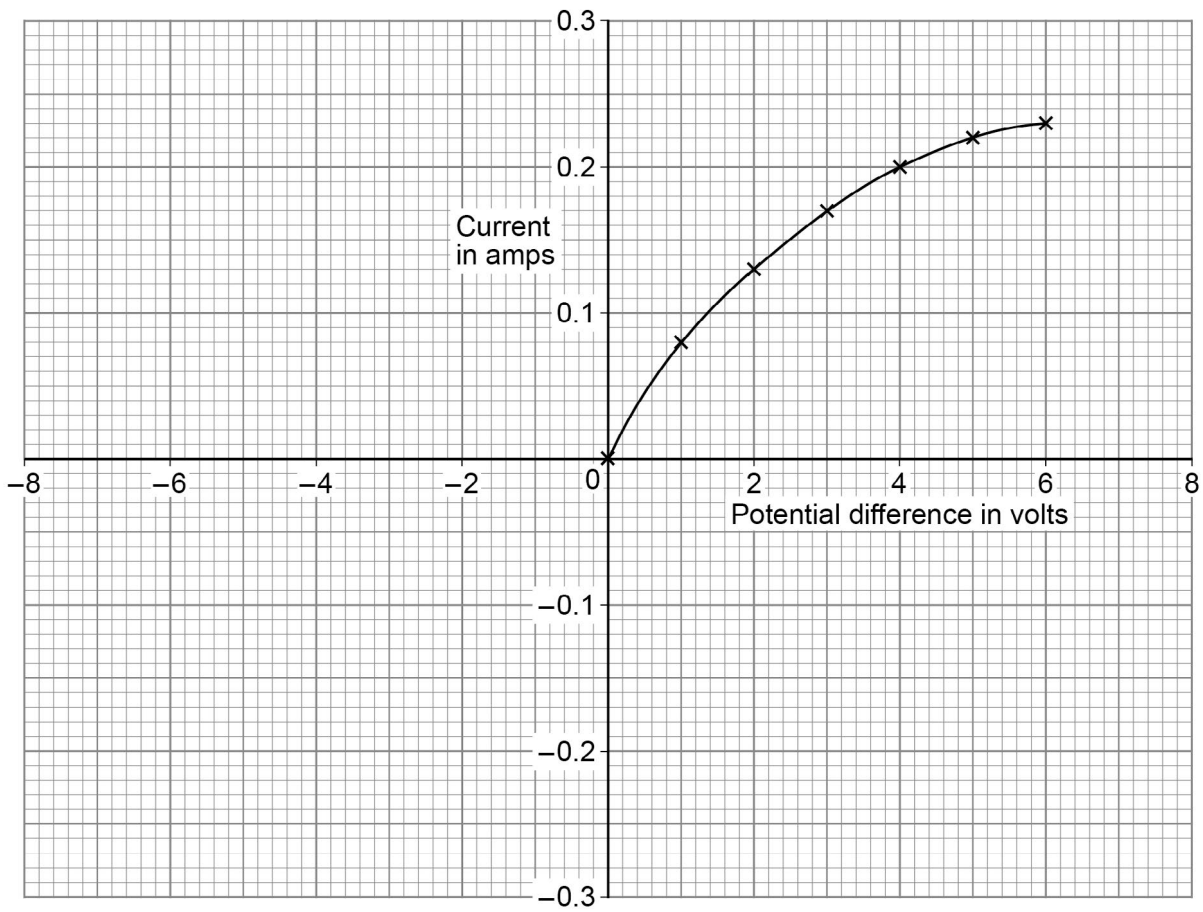

0 1 . 2 The student reversed the connections to the power supply and obtained negative values for the current and potential difference.

Draw a line on **Figure 2** to show the relationship between the negative values of current and potential difference.

[2 marks]

4.2.1.4 Resistors

Question 32 · continued

0 1 . 3 Write down the equation which links current (I), potential difference (V) and resistance (R).

[1 mark]

0 1 . 4 Determine the resistance of the filament lamp when the potential difference across it is 1.0 V.

Use data from **Figure 2**.

[4 marks]

Resistance = _____ Ω

0 1 . 5 A second student did the same investigation. The ammeter used had a zero error.

What is meant by a zero error?

[1 mark]

11

4.2.1.4 Resistors

Question 33

November 2020 | 8463/1H | Original Q4

0 4 **Figure 6** shows how much electricity was generated using coal-fired and gas-fired power stations in January for 5 years in the UK.

Figure 6

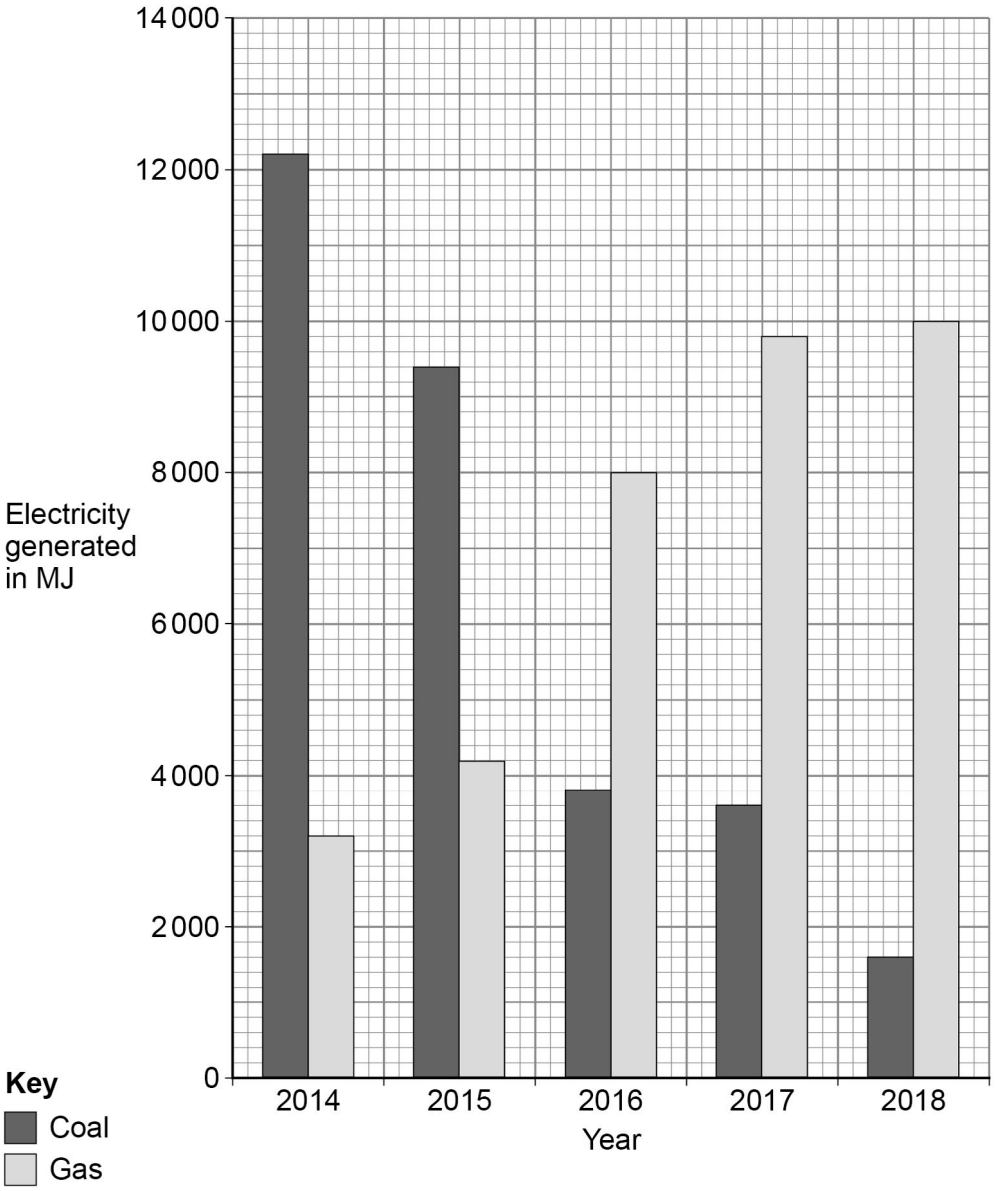

0 4 . 1 Determine the percentage increase in electricity generated using gas-fired power stations from 2014 to 2018.

[2 marks]

Percentage increase = _____ %

4.2.1.4 Resistors

Question 33 · continued

0 4 . 2 Give **two** environmental advantages of using a gas-fired power station to generate electricity compared with using a coal-fired power station.

[2 marks]

1 _____

_____

2 _____

_____

Question 4 continues on the next page

Question 33 · continued

The mean surface temperature of the sea changes throughout the year.

A change in the mean surface temperature from year to year indicates climate change.

Figure 7 shows how the mean surface temperature changed between 1988 and 2016.

Figure 7

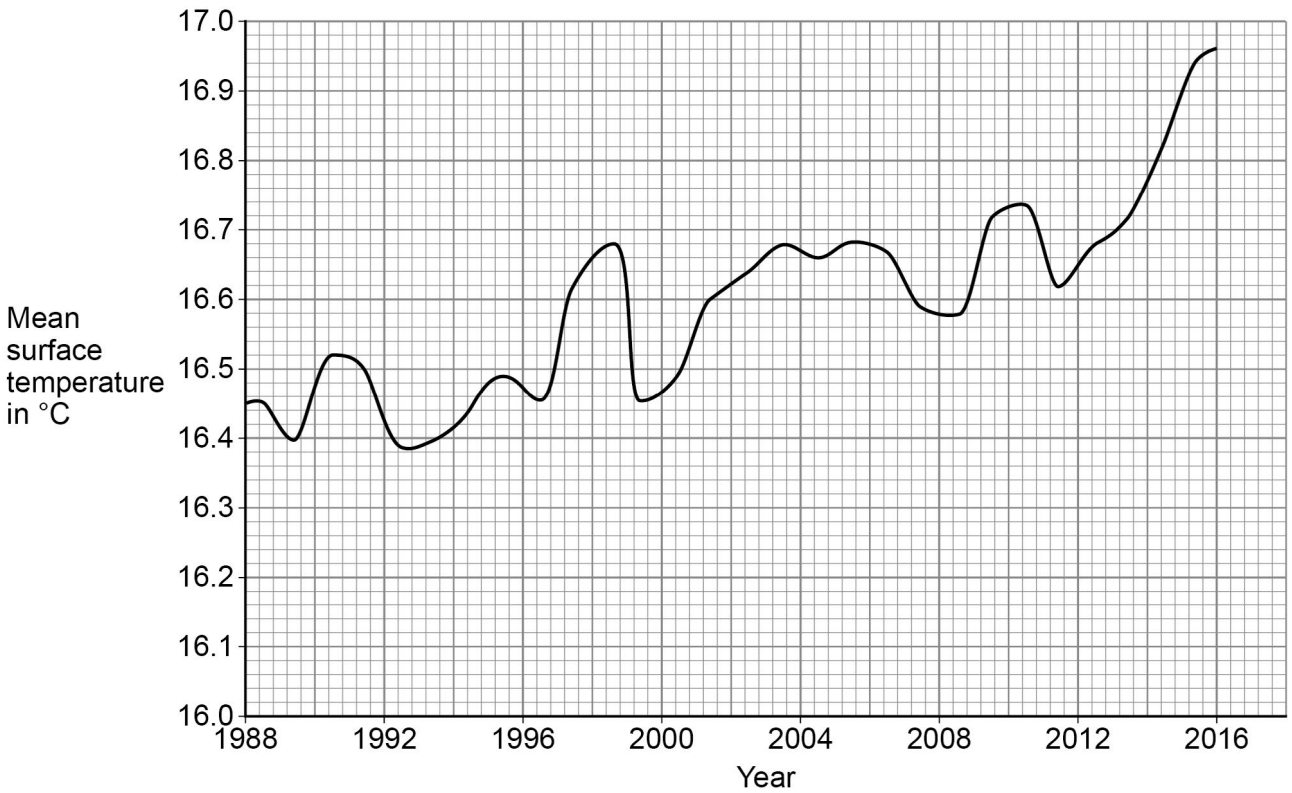

0 4 . 3 A student does not believe that climate change is occurring.

Explain how the data in **Figure 7** suggests the student is wrong.

[2 marks]

Question 33 · continued

0 4 . 4 A thermistor can be used to measure temperature.

Figure 8 shows how the resistance of four different thermistors A, B, C and D, varies with temperature.

Figure 8

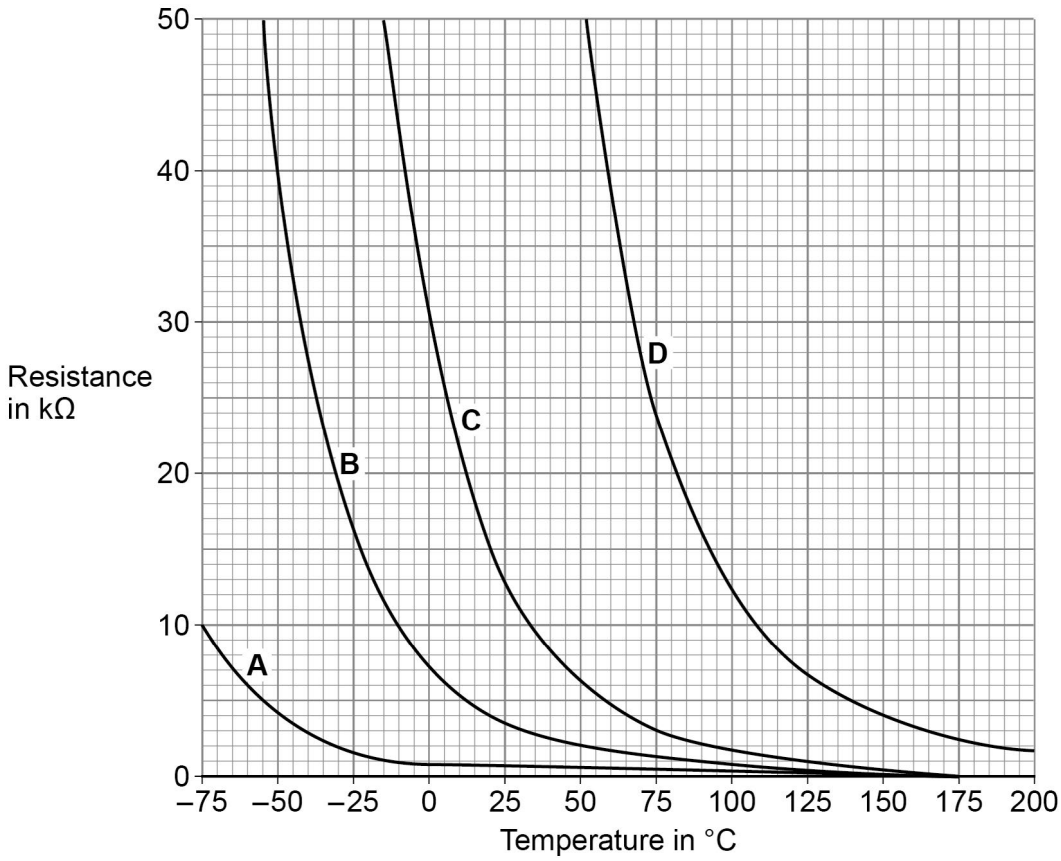

Which of the four thermistors would be the most suitable to measure the surface temperature of the sea?

Tick (✓) **one** box.

Explain your answer.

[3 marks]

A	B	C	D
☐	☐	☐	☐

9

4.2.1.4 Resistors

Question 34

November 2021 | 8463/1H | Original Q3

0 3 Student **A** investigated how the current in resistor **R** at constant temperature varied with the potential difference across the resistor.

Student **A** recorded both positive and negative values of current.

Figure 2 shows the circuit Student **A** used.

Figure 2

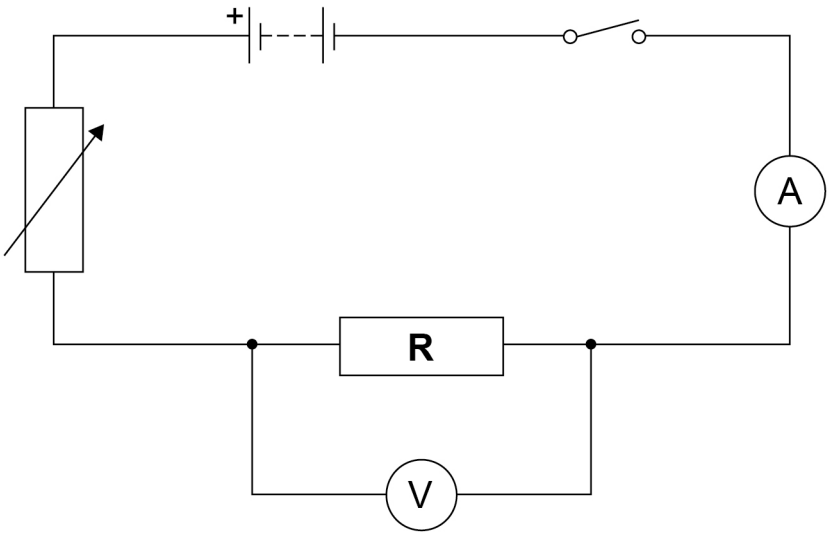

0 3 . 1 Describe a method that Student **A** could use for this investigation.

[6 marks]

4.2.1.4 Resistors

Question 34 · continued

0 3 . 2 Student **B** repeated the investigation.

During Student **B**'s investigation the temperature of resistor **R** increased.

Explain how the increased temperature of resistor **R** would have affected Student **B**'s results.

[2 marks]

Question 3 continues on the next page

4.2.1.4 Resistors

Question 34 · continued

Figure 3 shows the scale on a moving coil ammeter at one time in the investigation.

Figure 3

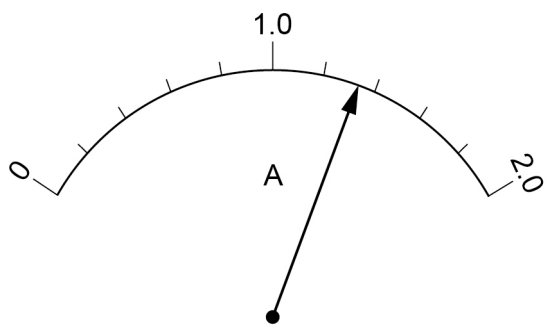

0 3 . 3 What is the resolution of the moving coil ammeter?

[1 mark]

Resolution = _____ A

4.2.1.4 Resistors

Question 34 · continued

0 3 . 4 Student **B** replaced the moving coil ammeter with a digital ammeter.

Figure 4 shows the reading on the digital ammeter.

Figure 4

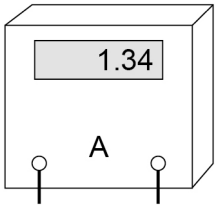

The digital ammeter has a higher resolution than the moving coil ammeter.

Give **one** other reason why it would have been better to use the digital ammeter throughout this investigation.

[1 mark]

10

4.2.1.4 Resistors

Question 35

June 2023 | 8463/1H | Original Q6

0 6 A student investigated how the current in a filament lamp varies with the potential difference across the filament lamp.

Figure 6 shows the results.

Figure 6

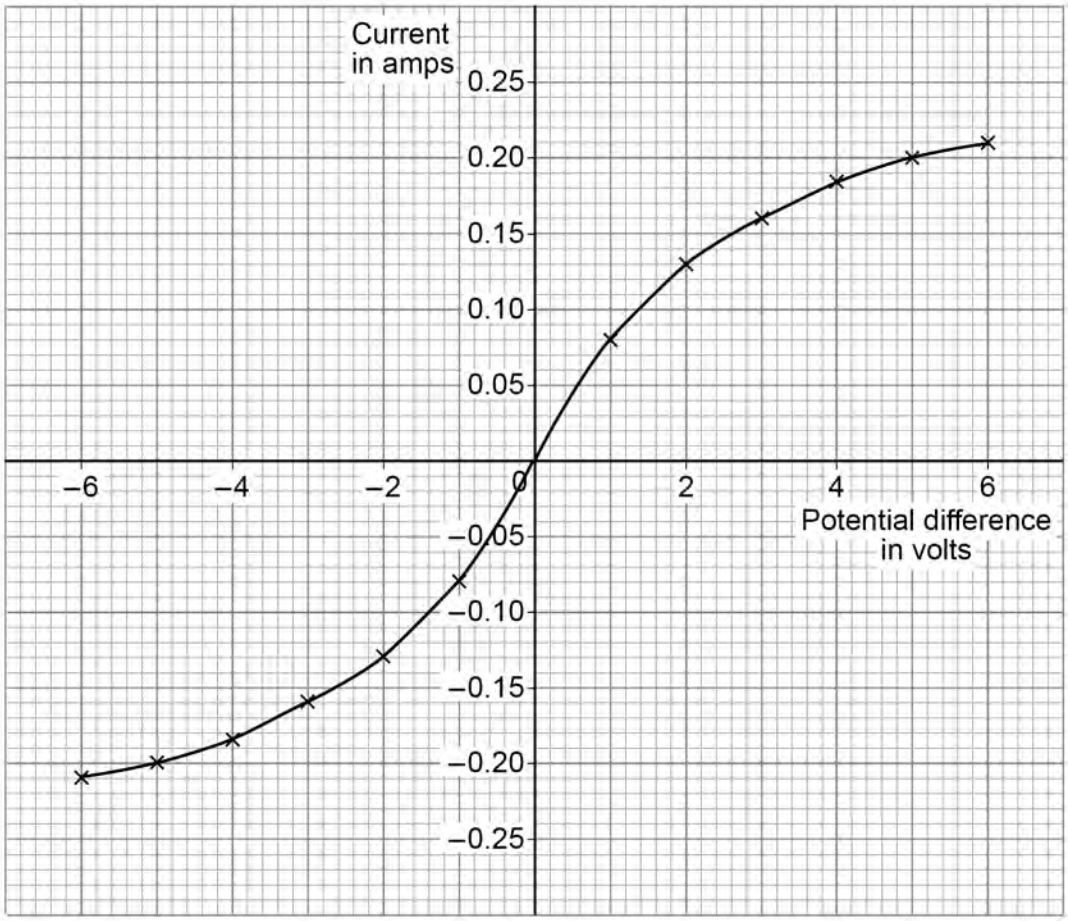

4.2.1.4 Resistors

Question 35 · continued

0 6 . 1 Describe a method the student could use to obtain these results.

You should include a circuit diagram.

[6 marks]

4.2.1.4 Resistors

Question 35 · continued

0 6 . 2 Determine the resistance of the filament lamp when the potential difference across it is +3.0 V.

Use the Physics Equations Sheet.

Use **Figure 6** on page 18.

[3 marks]

Resistance = _____ Ω

0 6 . 3 The current in the lamp is 0.21 A when the potential difference across the lamp is 6.0 V.

Calculate the energy transferred by the filament lamp in 30 minutes.

Use the Physics Equations Sheet.

[5 marks]

Energy transferred = _____ J

4.2.1.4 Resistors

Question 35 · continued

0 6 . 4 The power output of the lamp is 1.0 W when the potential difference across the lamp is 5.0 V.

A student predicts that the power output would be 4.0 W if the potential difference was doubled.

Explain why the student is **not** correct.

[2 marks]

16

Turn over for the next question

4.2.1.4 Resistors

Question 36

June 2024 | 8463/1H | Original Q5

0 5 **Figure 7** shows a student putting a coin into a vending machine that sells food.

Figure 7



0 5 . 1 The vending machine is connected to the mains electricity supply.

What is the frequency and the potential difference of the mains electricity supply in the UK?

[2 marks]

Frequency = _____ Hz

Potential difference = _____ V

4.2.1.4 Resistors

Question 36 · continued

The vending machine identifies the value of the coin by measuring the resistance of the coin.

0 5 . 2 The power dissipated by the coin is 340 mW when the current in the coin is 0.75 A.

Calculate the resistance of the coin.

Use the Physics Equations Sheet.

[4 marks]

Resistance = _____ Ω

0 5 . 3 Coins that are dirty are **not** recognised by the vending machine.

Suggest **one** reason why.

[1 mark]

Question 5 continues on the next page

4.2.1.4 Resistors

Question 36 · continued

Figure 8 shows part of a different circuit that is used to monitor the temperature inside the vending machine.

Figure 8

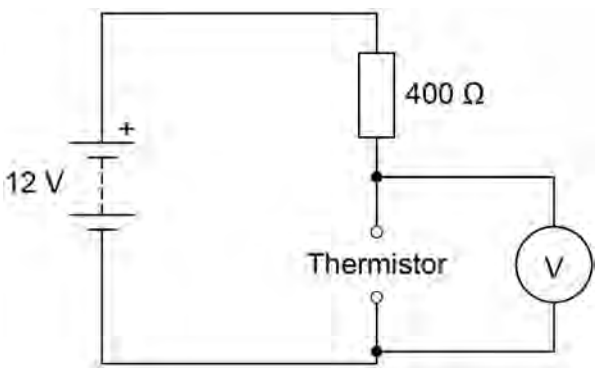

0 5 . 4 The circuit symbol for a thermistor has not been included.

Draw the circuit symbol for a thermistor in the box below.

[1 mark]

4.2.1.4 Resistors

Figure 9 shows how the resistance of the thermistor varies with temperature.

Figure 9

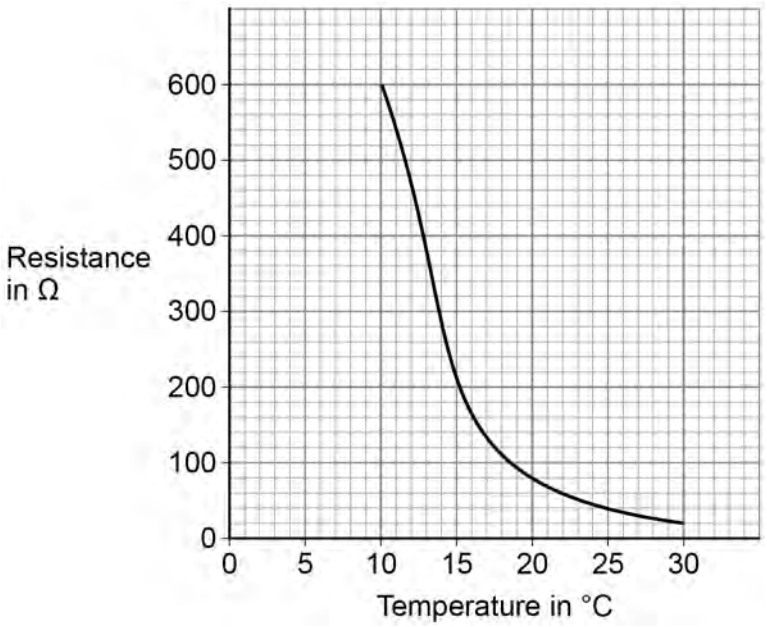

0 5 . 5 The cooling system inside the vending machine turns on when the temperature of the thermistor is above 20 °C.

Determine the potential difference across the thermistor when the temperature is 20 °C.

Use the Physics Equations Sheet.

[5 marks]

Potential difference = _____ V

13