AQA GCSE Physics | 8463

SPECIFICATION POINT 4.2.1.3

Current, resistance and potential difference

Past-paper questions

Tier	**Higher**
Question groups	**90**
Available paper years	**2003–2025**

Using this booklet

1. Answer the questions in order and show your working.
2. Original question numbers and marks are retained.
3. Print at actual size (100%) for measuring questions.
4. Use the companion answer booklet to check your work.

Name: _____ **Date:** _____

Whole questions are retained for context, so some parts assess other specification points. Current and legacy sources are labelled. Continue on extra paper if needed.

4.2.1.3 Current, resistance and potential difference

Question 01

June 2003 | 3451H | Original Q5 | Legacy

5 (a) In one design of tilt switch, two metal contacts are sealed inside a small plastic container. There is some mercury inside the container. Mercury is a metal which is a liquid at room temperature.

The switch is shown in an OFF position. Next to it, draw the same switch in an ON position.

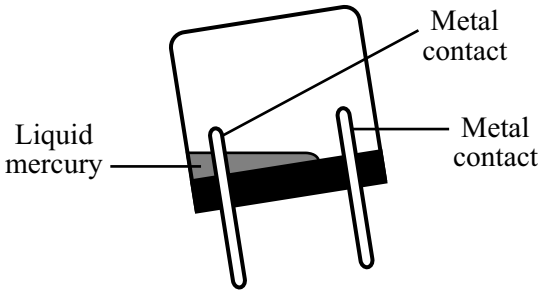

OFF **ON** *(2 marks)*

(b) The diagram shows the circuit used in an experiment. Both switches are shown in the open (off) position.

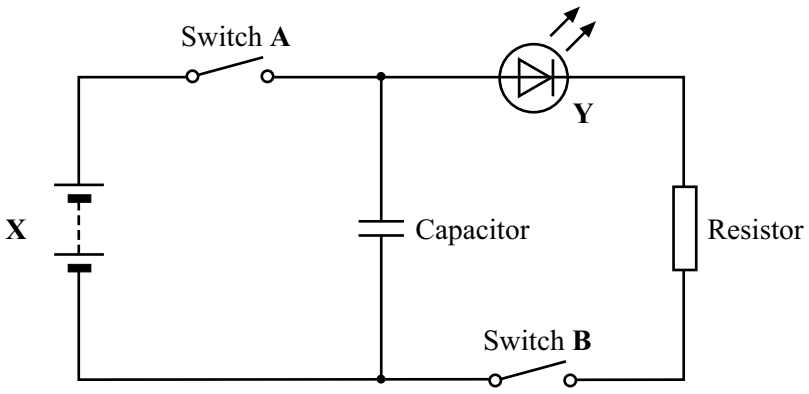

(i) Name component **X** and component **Y**.

X is a ..... **Y** is a.....

(2 marks)

(ii) Switch **A** was closed for three minutes. Switch **A** was then opened. Switch **B** was then closed and the time, t, was measured for how long component **Y** stayed on.

The experiment was then repeated, using a resistor of greater resistance.

How would this change affect the time, t?

.....

(1 mark)

4.2.1.3 Current, resistance and potential difference

Question 01 · continued

MARGIN BLANK

(iii) Explain the reason for your answer to part (b) (ii).

.....

.....

.....

.....

(2 marks)

(c) The diagram shows the coloured bands on a resistor.

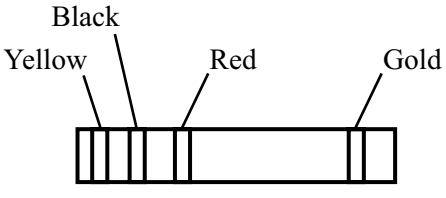

The gold band tells you that the tolerance is ± 5%.

The colour code for resistors is given in the table.

Figure	Colour
0	black
1	brown
2	red
3	orange
4	yellow
5	green
6	blue
7	violet
8	grey
9	white

What is the **maximum** value of the resistance of the resistor shown in the diagram?

Show clearly how you work out your final answer and give the unit.

.....

.....

.....

Maximum resistance = ...

(3 marks)

10

4.2.1.3 Current, resistance and potential difference

Question 02

June 2003 | 3451H | Original Q8 | Legacy

8 A set of Christmas tree lights is made from twenty identical lamps connected in series.

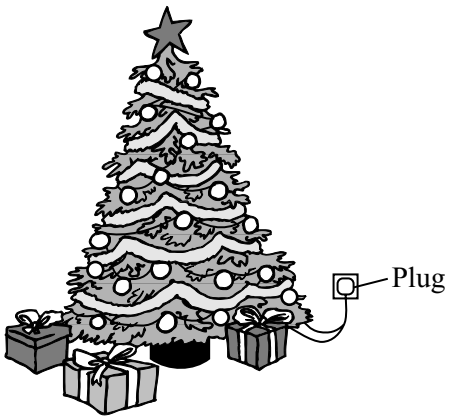

(a) Each lamp is designed to take a current of 0.25 A. The set plugs directly into the 230 V mains electricity supply.

(i) Write down the equation that links current, potential difference and resistance.

.....

(1 mark)

(ii) Calculate the resistance of **one** of the lamps. Show clearly how you work out your final answer and give the unit.

.....

.....

.....

.....

Resistance = ...

(4 marks)

(iii) What is the total resistance of the set of lights?

.....

Total resistance = ...

(1 mark)

(b) How does the resistance of a filament lamp change as the temperature of the filament changes?

.....

.....

(1 mark)

7

4.2.1.3 Current, resistance and potential difference

Question 03

June 2003 | 3451H | Original Q15 | Legacy

15 (a) An electronic circuit in a freezer contains an alarm. This alarm will sound if the temperature inside the freezer rises above –15 °C. The alarm will also sound if the freezer door is left open for more than 45 seconds.

In the electronic circuit, name:

(i) the logic gate;

.....

(1 mark)

(ii) an input sensor which could detect the temperature rise;

.....

(1 mark)

(iii) a component which could act as a timer.

.....

(1 mark)

(b) The diagram shows a different system which could be used to switch on a security light, outside a house, at night. The diagram shows the input sensing circuit and the circuit for an output device.

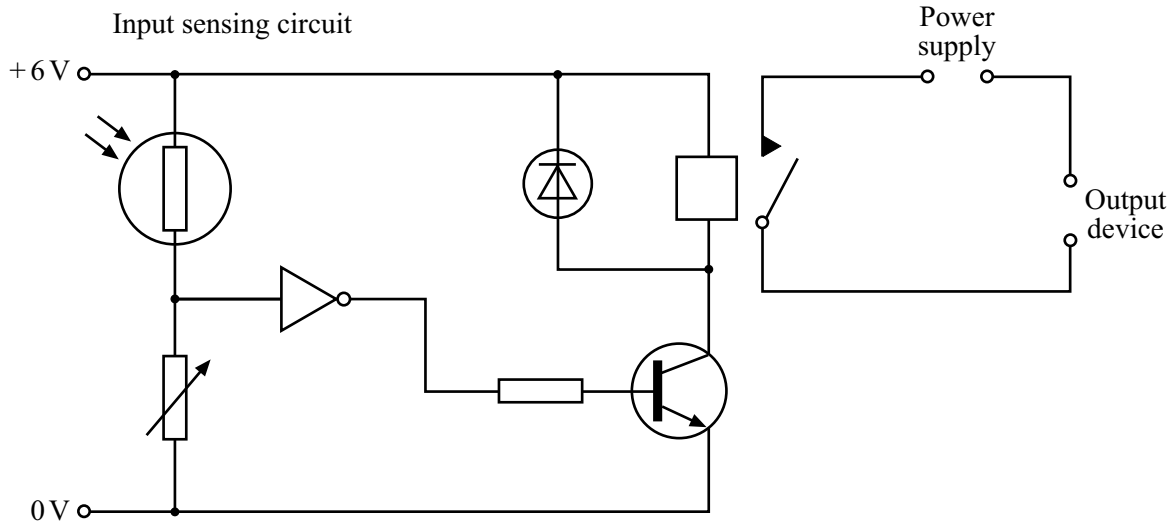

4.2.1.3 Current, resistance and potential difference

Question 03 · continued

MARGIN
BLANK

(i) Complete the **five** spaces in these sentences to give the correct order for the events which occur.

As it gets dark, the resistance of the light dependent resistor (LDR) increases. The input to the logic gate will be ..... so the output will be ..... . Then the ..... will be switched on, the ..... will be switched on and the ..... will be switched on. *(5 marks)*

(ii) Explain why a diode is included in the circuit.

.....

.....

.....

..... *(2 marks)*

(iii) Why is the diode reverse-biased?

.....

..... *(1 mark)*

(iv) The system, in the diagram, can be modified to control a garden water fountain. This can be done by changing the output device to an electric pump.

The input sensing circuit could be modified so that the water fountain would operate only during the day.

Suggest **two** alternative ways in which the input sensing circuit could be modified so that it would have this result.

1 .....

.....

2 .....

..... *(2 marks)*

13

4.2.1.3 Current, resistance and potential difference

Question 04

June 2003 | 3462H3 | Original Q6 | Legacy

6 A set of Christmas tree lights is made from twenty identical lamps connected in series.

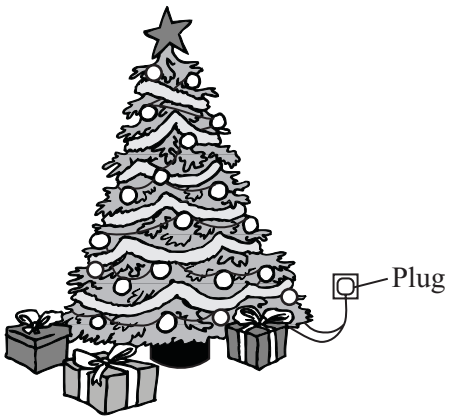

(a) Each lamp is designed to take a current of 0.25 A. The set plugs directly into the 230 V mains electricity supply.

(i) Write down the equation that links current, potential difference and resistance.

.....

(1 mark)

(ii) Calculate the resistance of **one** of the lamps. Show clearly how you work out your final answer and give the unit.

.....

.....

.....

.....

Resistance = ...

(4 marks)

(iii) What is the total resistance of the set of lights?

.....

Total resistance = ...

(1 mark)

(b) How does the resistance of a filament lamp change as the temperature of the filament changes?

.....

.....

(1 mark)

7

4.2.1.3 Current, resistance and potential difference

Question 05

June 2004 | 3451H | Original Q1 | Legacy

1 The drawing shows the circuit used to investigate how the current through a 5 ohm (Ω) resistor changes as the potential difference (voltage) across the resistor changes.

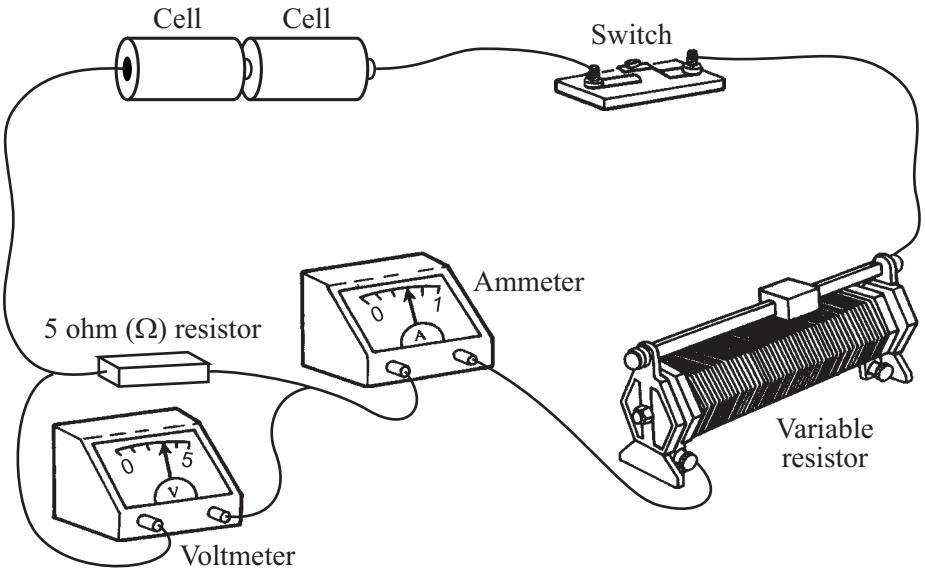

(a) Draw, in the space below, a circuit diagram of this circuit. Use the correct symbols for each part of the circuit.

(2 marks)

4.2.1.3 Current, resistance and potential difference

Question 05 · continued

MARGIN BLANK

(b) (i) Write down the equation that links current, potential difference and resistance.

.....

(1 mark)

(ii) Calculate the potential difference across the 5 ohm (Ω) resistor when the current through the resistor equals 0.4 A. Show clearly how you work out your final answer.

.....

.....

potential difference =.....volts

(2 marks)

(iii) Complete the graph to show how the current through the resistor changes as the potential difference across the resistor increases from 0 V to 3 V. Assume the resistor stays at a constant temperature.

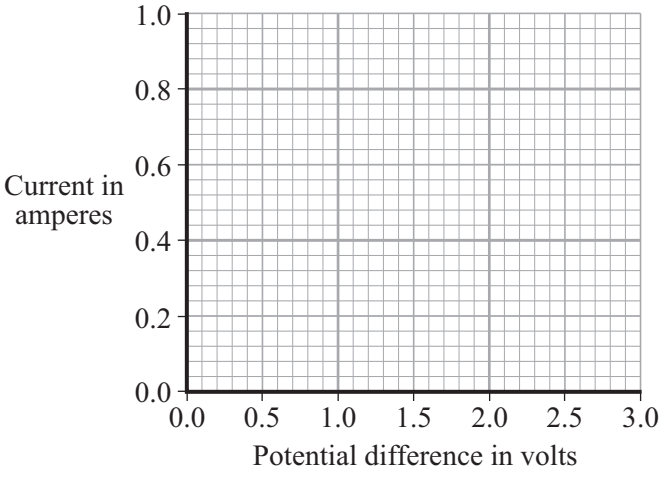

(2 marks)

(c) The resistor is replaced by a 3 V filament lamp. The resistance of the lamp increases as the potential difference across it increases. Why?

.....

.....

(1 mark)

8

4.2.1.3 Current, resistance and potential difference

Question 06

June 2004 | 3451H | Original Q8 | Legacy

8 (a) A physics textbook says that:

"The *flow of electrons* through a circuit can be controlled by using a fixed resistor or a variable resistor."

(i) What word can be used for the *flow of electrons*?

.....

(1 mark)

(ii) The flow of electrons can also be controlled by a *thermistor*.

How is a *thermistor* affected by an increase in temperature?

.....

.....

.....

(2 marks)

(b) Draw straight lines to link each part of an electronic circuit with its description.

Part of electronic circuit	Description
input sensor	controlled by the processor
processor	detects changes in the environment
output device	decides what action is needed

(2 marks)

4.2.1.3 Current, resistance and potential difference

Question 06 · continued

MARGIN
BLANK

(c) The diagram shows part of an electronic circuit. This part is connected to the processor.

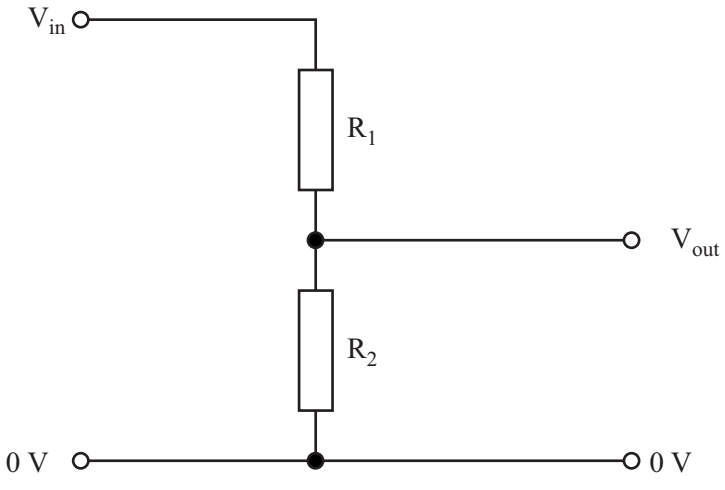

(i) What is the name of this part?

.....

(1 mark)

(ii) The input potential difference (voltage) is 6 volts, the value of R_1 is 15 ohms and the value of R_2 is 30 ohms.

Use the following equation to calculate the value of the output potential difference.

$$V_{out} = V_{in} \times \frac{R_2}{(R_1 + R_2)}$$

.....

.....

Output potential difference = ...volts

(2 marks)

(iii) The resistor R_1 is replaced by another resistor with a higher value. The resistor R_2 is not changed.

What effect will this have on:

the potential difference across the new resistor;

.....

the potential difference across R_2?

.....

(2 marks)

4.2.1.3 Current, resistance and potential difference

Question 07

June 2004 | 3451H | Original Q13 | Legacy

13 (a) The diagram shows a 12 volt lighting system. Each lamp has a power of 32 watts.

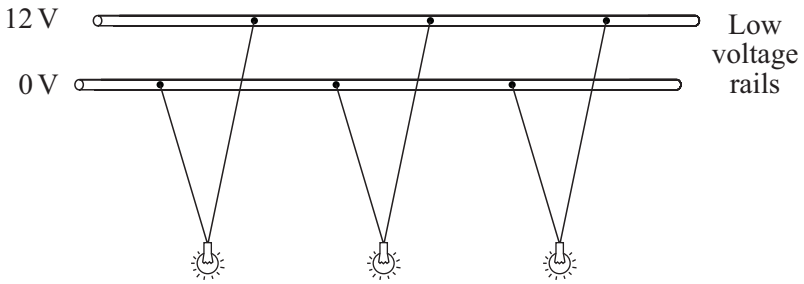

(i) Write down the equation that links current, potential difference and power.

.....

(1 mark)

(ii) Calculate the input current to the lighting system. Show clearly how you work out your answer.

.....

.....

current =.....A

(2 marks)

(b) A transformer is used to reduce the 230 V a.c. mains to the 12 V supply required for the lighting system. The transformer has 1150 turns on its primary coil.

(i) Write down the equation which links the number of turns of each transformer coil to the voltage across each transformer coil.

.....

.....

(1 mark)

(ii) Calculate the number of turns on the secondary coil of the transformer. Show clearly how you work out your answer.

.....

.....

.....

number of turns on the secondary coil =.....

(2 marks)

6

4.2.1.3 Current, resistance and potential difference

Question 08

June 2004 | 3462H3 | Original Q1 | Legacy

1 The drawing shows the circuit used to investigate how the current through a 5 ohm (Ω) resistor changes as the potential difference (voltage) across the resistor changes.

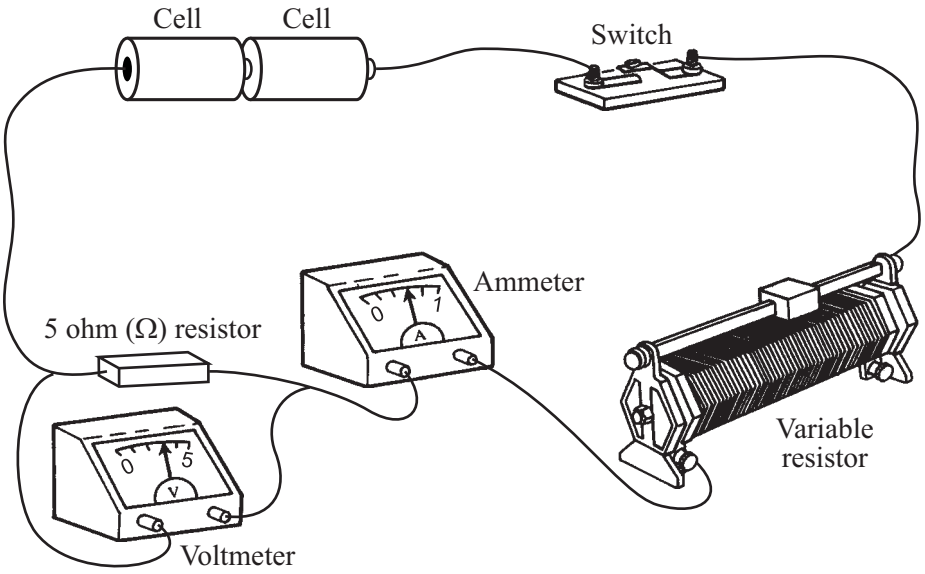

(a) Draw, in the space below, a circuit diagram of this circuit. Use the correct symbols for each part of the circuit.

(2 marks)

4.2.1.3 Current, resistance and potential difference

Question 08 · continued

MARGIN BLANK

(b) (i) Write down the equation that links current, potential difference and resistance.

.....

(1 mark)

(ii) Calculate the potential difference across the 5 ohm (Ω) resistor when the current through the resistor equals 0.4 A. Show clearly how you work out your final answer.

.....

.....

potential difference =.....volts

(2 marks)

(iii) Complete the graph to show how the current through the resistor changes as the potential difference across the resistor increases from 0 V to 3 V. Assume the resistor stays at a constant temperature.

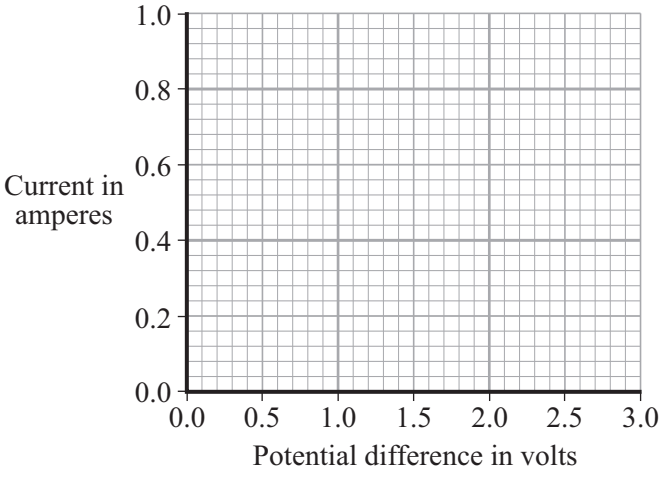

(2 marks)

(c) The resistor is replaced by a 3 V filament lamp. The resistance of the lamp increases as the potential difference across it increases. Why?

.....

.....

(1 mark)

8

4.2.1.3 Current, resistance and potential difference

Question 09

June 2004 | 3462H3 | Original Q11 | Legacy

11 (a) The diagram shows a 12 volt lighting system. Each lamp has a power of 32 watts.

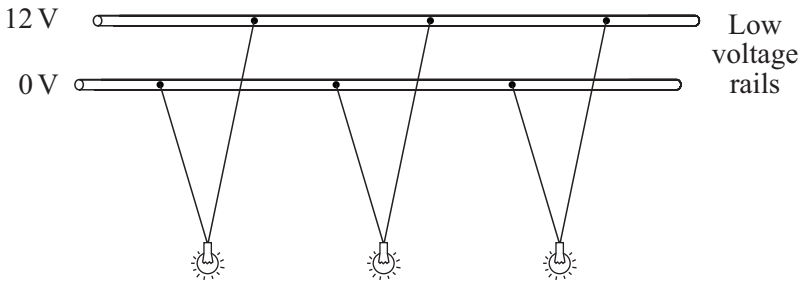

(i) Write down the equation that links current, potential difference and power.

.....

(1 mark)

(ii) Calculate the input current to the lighting system. Show clearly how you work out your answer.

.....

.....

current =.....A

(2 marks)

(b) A transformer is used to reduce the 230 V a.c. mains to the 12 V supply required for the lighting system. The transformer has 1150 turns on its primary coil.

(i) Write down the equation which links the number of turns of each transformer coil to the voltage across each transformer coil.

.....

.....

(1 mark)

(ii) Calculate the number of turns on the secondary coil of the transformer. Show clearly how you work out your answer.

.....

.....

.....

number of turns on the secondary coil =.....

(2 marks)

6

4.2.1.3 Current, resistance and potential difference

Question 10

June 2005 | 3451 | Original Q1 | Legacy

1 The circuit shown has four identical ammeters.

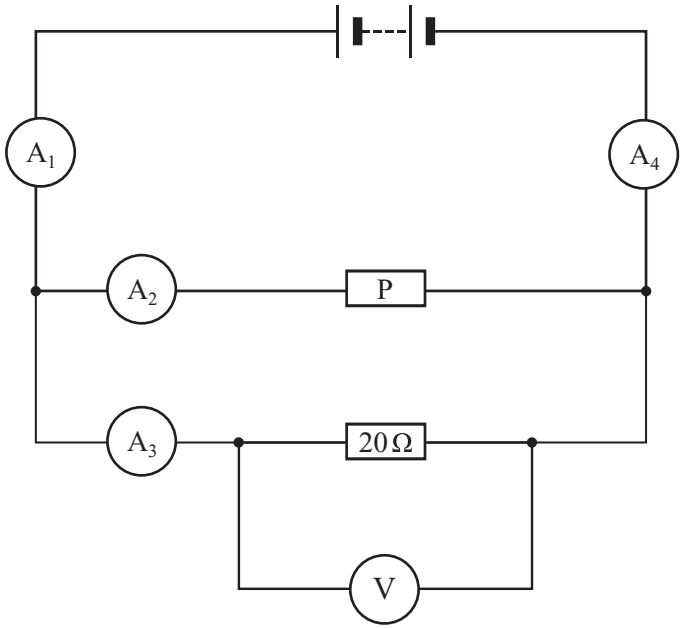

(a) The table gives the current through two of the ammeters.

(i) Complete the table to show the current through the other two ammeters.

Ammeter	Reading on ammeter in amps
A_1	
A_2	0.2
A_3	0.3
A_4	

(2 marks)

(ii) Which **one** of the following statements is correct. Tick (✓) the box next to your choice.

The resistance of **P** is more than 20 Ω. ☐

The resistance of **P** is equal to 20 Ω. ☐

The resistance of **P** is less than 20 Ω. ☐

Give a reason for your choice.

.....

.....

4.2.1.3 Current, resistance and potential difference

Question 10 · continued

MARGIN BLANK

(b) (i) Write down the equation that links current, potential difference and resistance.

.....

(1 mark)

(ii) Calculate the reading on the voltmeter. Show clearly how you work out your answer.

.....

.....

Voltmeter reading = ... volts.

(2 marks)

(iii) State the potential difference of the power supply.

.....

(1 mark)

(c) A second circuit contains an unknown component labelled **X**.

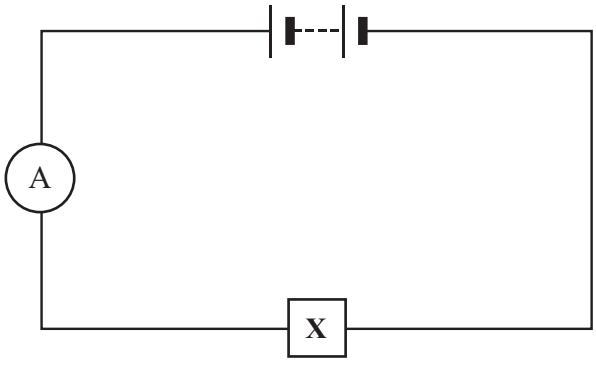

As component **X** is heated, the reading on the ammeter goes up.

What is component **X**?

.....

Give a reason for your answer.

.....

.....

(2 marks)

10

4.2.1.3 Current, resistance and potential difference

Question 11

June 2005 | 3451 | Original Q11 | Legacy

11 The diagram shows a charged thundercloud.

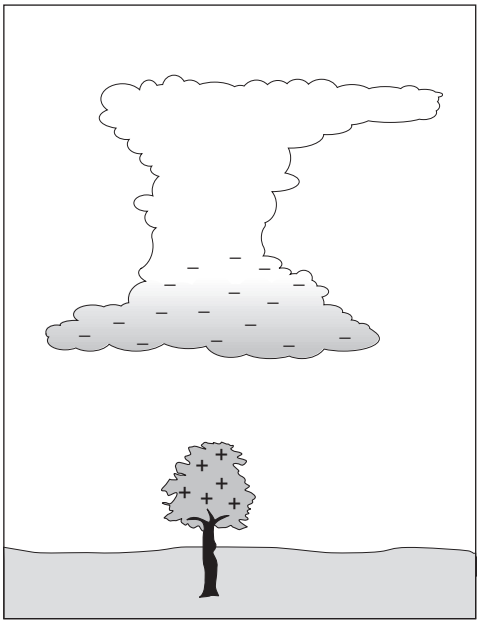

(a) Why does the tree below the thundercloud become positively charged?

.....

.....

(1 mark)

(b) The base of the cloud has a negative charge of 18 coulombs.
The potential difference between the base of the cloud and the ground is 1 200 000 kilovolts.

(i) Write down the equation that links charge, energy transferred and potential difference.

.....

(1 mark)

(ii) Calculate the maximum energy that could be transferred to the ground by a lightning strike. Show clearly how you work out your answer.

.....

.....

Maximum energy transferred = ... joules

(2 marks)

4.2.1.3 Current, resistance and potential difference

Question 11 · continued

MARGIN
BLANK

(c) A lightning conductor is usually attached to tall buildings. This reduces the risk of damage by a lightning strike.

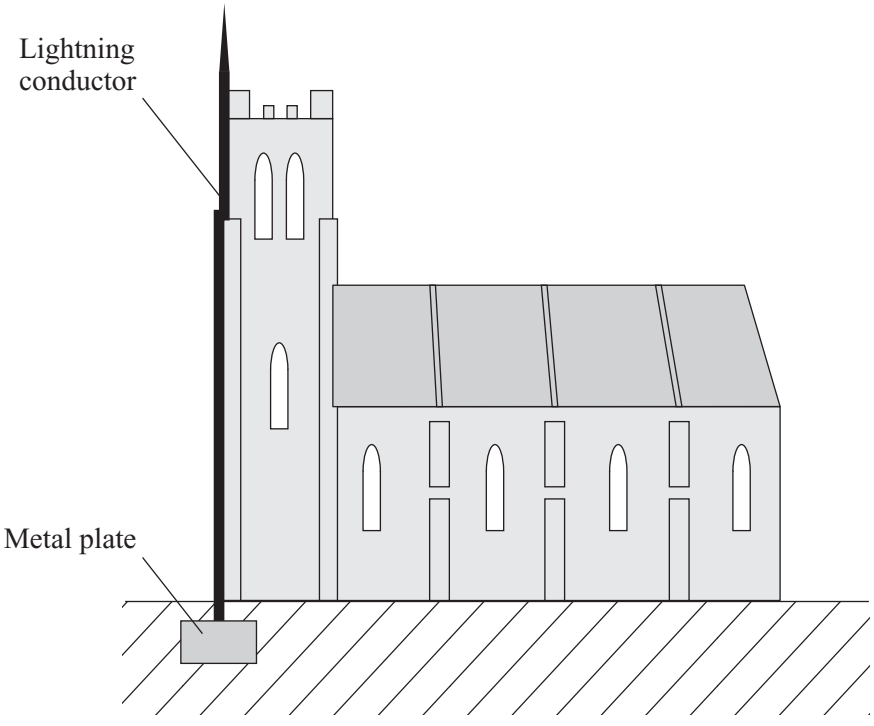

Explain why the lightning conductor is made of copper.

.....

.....

.....

.....

(2 marks)

6

TURN OVER FOR THE NEXT QUESTION

4.2.1.3 Current, resistance and potential difference

Question 12

June 2005 | 3451 | Original Q12 | Legacy

12 (a) The graph shows how the resistance of a thermistor changes with temperature.

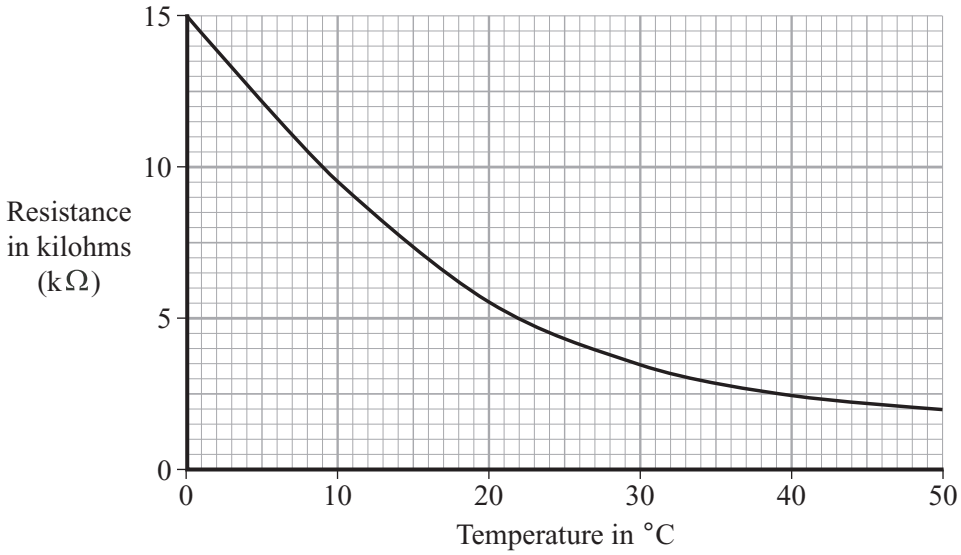

Use the graph to find:

(i) the resistance, in kΩ, of the thermistor at 18 ºC;

Resistance = ... kΩ

(1 mark)

(ii) the temperature, in ºC, when the resistance of the thermistor is 12 500 ohms (Ω).

Temperature = ... ºC

(1 mark)

(b) The diagram shows how a thermistor is used in part of an electronic circuit.

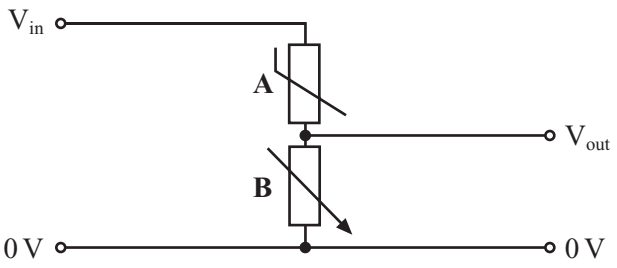

(i) Name the components **A** and **B**.

A is a ..... and **B** is a .....

(1 mark)

(ii) Name the part of the electronic circuit shown in the diagram.

.....

(1 mark)

Question 12 · continued

MARGIN BLANK

(iii) What will happen to the value of V_{out} as the temperature increases from the freezing point of water to room temperature?

.....

(1 mark)

(iv) Explain your answer to part (b)(iii).

.....

.....

.....

(2 marks)

(c) An electronic circuit switches on an output device when the temperature gets above a certain value. Name a suitable output device.

.....

(1 mark)

(d) The diagram shows an electronic circuit.

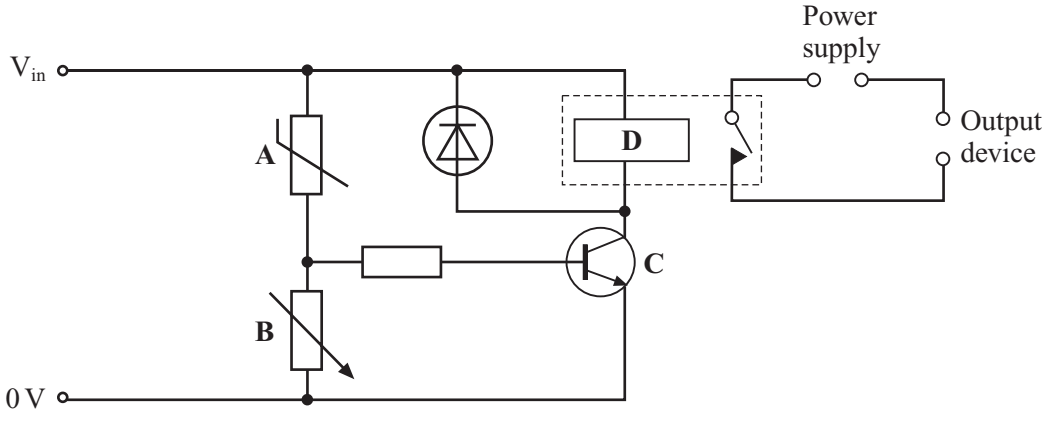

(i) Name components **C** and **D**.

C is a ..... and **D** is a .....

(2 marks)

(ii) The circuit is modified by adding a NOT gate. This makes the circuit switch on the output device when the temperature gets too low.

Describe where in the circuit the NOT gate would be put.

.....

.....

(1 mark)

Describe a use for this modified circuit.

.....

.....

(1 mark)

12

4.2.1.3 Current, resistance and potential difference

Question 13

June 2005 | 3462 | Original Q1 | Legacy

1 The circuit shown has four identical ammeters.

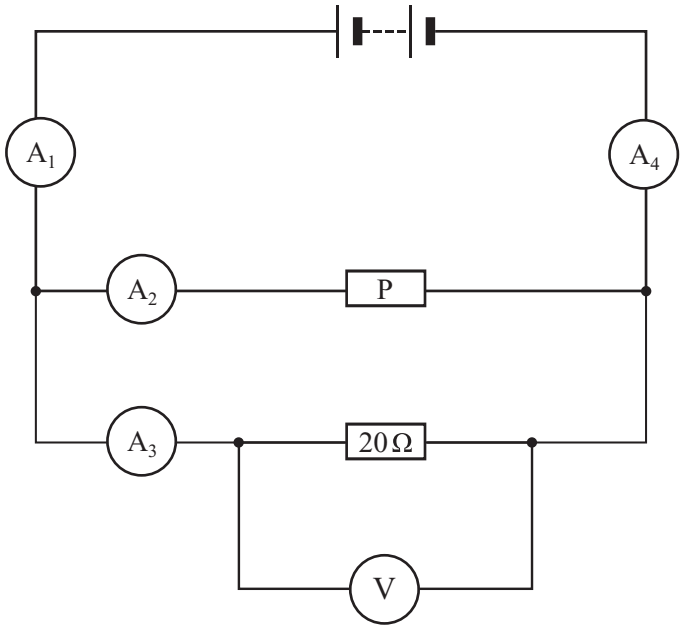

(a) The table gives the current through two of the ammeters.

(i) Complete the table to show the current through the other two ammeters.

Ammeter	Reading on ammeter in amps
A_1	
A_2	0.2
A_3	0.3
A_4	

(2 marks)

(ii) Which **one** of the following statements is correct. Tick (✓) the box next to your choice.

The resistance of **P** is more than 20 Ω. ☐

The resistance of **P** is equal to 20 Ω. ☐

The resistance of **P** is less than 20 Ω. ☐

Give a reason for your choice.

.....

.....

4.2.1.3 Current, resistance and potential difference

Question 13 · continued

MARGIN BLANK

(b) (i) Write down the equation that links current, potential difference and resistance.

.....

(1 mark)

(ii) Calculate the reading on the voltmeter. Show clearly how you work out your answer.

.....

.....

Voltmeter reading = ... volts.

(2 marks)

(iii) State the potential difference of the power supply.

.....

(1 mark)

(c) A second circuit contains an unknown component labelled **X**.

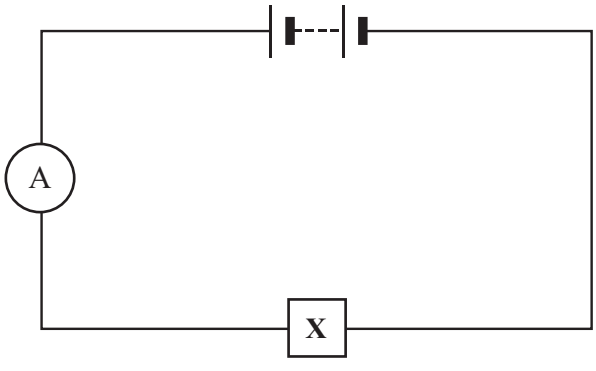

As component **X** is heated, the reading on the ammeter goes up.

What is component **X**?

.....

Give a reason for your answer.

.....

.....

(2 marks)

10

4.2.1.3 Current, resistance and potential difference

Question 14

June 2005 | 3462 | Original Q9 | Legacy

9 The diagram shows a charged thundercloud.

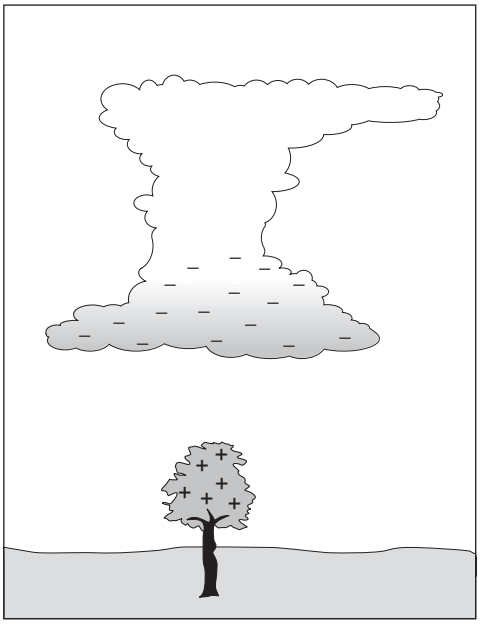

(a) Why does the tree below the thundercloud become positively charged?

.....

.....

(1 mark)

(b) The base of the cloud has a negative charge of 18 coulombs.
The potential difference between the base of the cloud and the ground is 1 200 000 kilovolts.

(i) Write down the equation that links charge, energy transferred and potential difference.

.....

(1 mark)

(ii) Calculate the maximum energy that could be transferred to the ground by a lightning strike. Show clearly how you work out your answer.

.....

.....

Maximum energy transferred = ... joules

(2 marks)

4.2.1.3 Current, resistance and potential difference

Question 14 · continued

1 /

MARGIN BLANK

(c) A lightning conductor is usually attached to tall buildings. This reduces the risk of damage by a lightning strike.

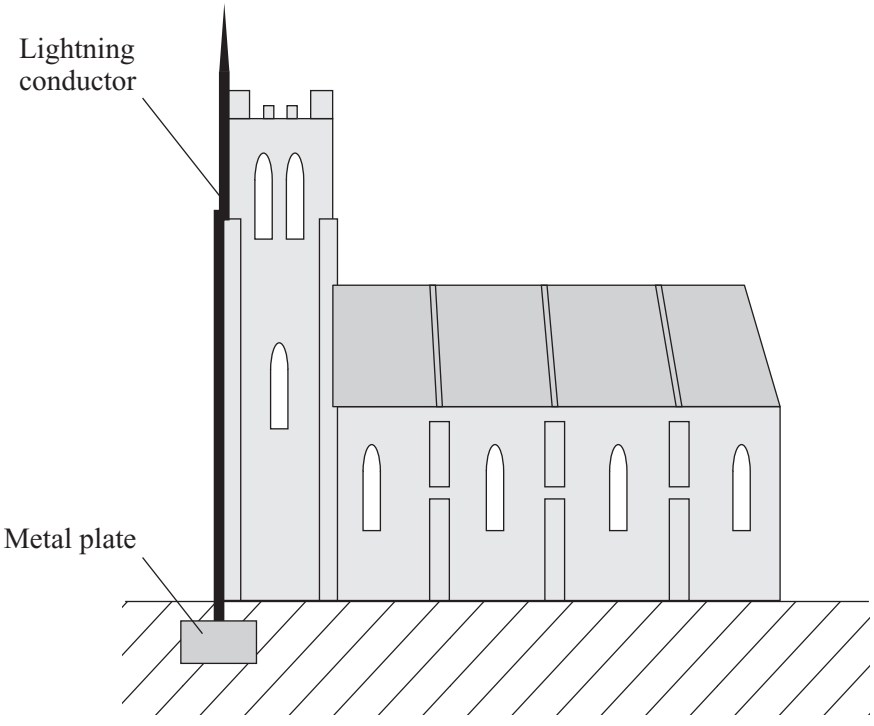

Explain why the lightning conductor is made of copper.

.....

.....

.....

.....

(2 marks)

6

TURN OVER FOR THE NEXT QUESTION

4.2.1.3 Current, resistance and potential difference

Question 15

June 2006 | 3451 | Original Q1 | Legacy

1 The diagram shows how a student joined several components, including a 6-volt lamp and four identical 1.5 volt cells, in a circuit.

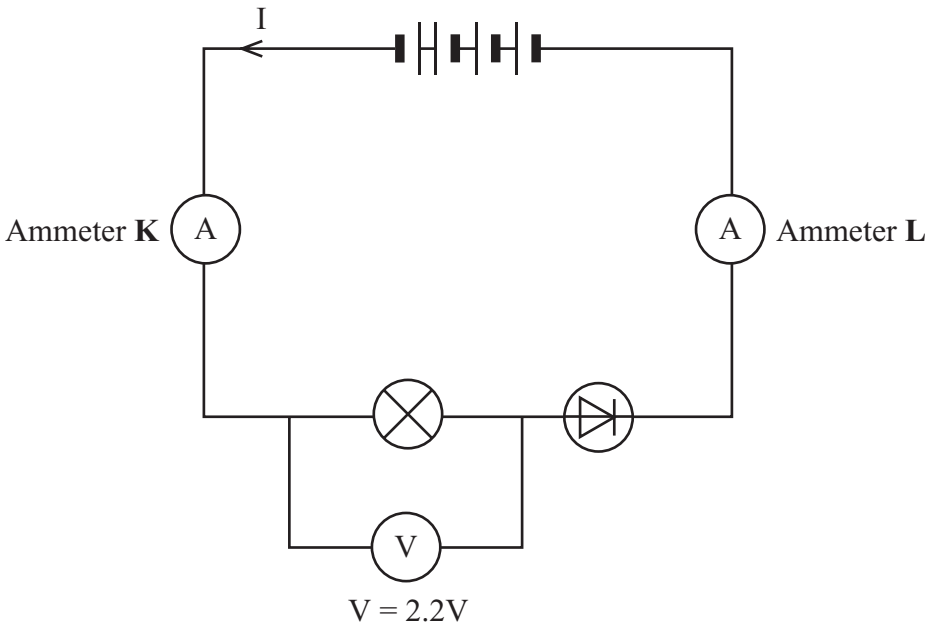

(a) The reading on ammeter **K** is 0.05 A.

What is the reading on ammeter **L**?

.....

(1 mark)

(b) The student expected the lamp in the diagram to be much brighter and the reading on the voltmeter to be 6 volts.

(i) Give **two** reasons why the reading on the voltmeter is much less than 6 volts. The voltmeter is working correctly.

1.....

.....

2.....

.....

(2 marks)

Question 15 · continued

BLANK

(ii) The student decides that the lamp is dim because the diode is connected the wrong way round. When the student reverses the connections to the diode the lamp goes out.

Explain why.

.....

.....

.....

.....

(2 marks)

(c) The graph shows how the current through a filament lamp changes as the voltage (potential difference) across it changes.

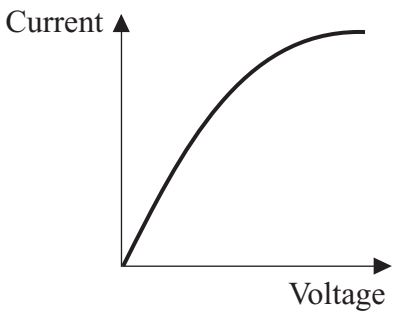

Explain why the graph is not a straight line.

To gain full marks in this question you should write your ideas in good English. Put them into a sensible order and use the correct scientific words.

.....

.....

.....

.....

.....

.....

.....

(4 marks)

9

4.2.1.3 Current, resistance and potential difference

Question 16

June 2006 | 3451 | Original Q9 | Legacy

9 The diagram shows the circuit for a simple light meter.

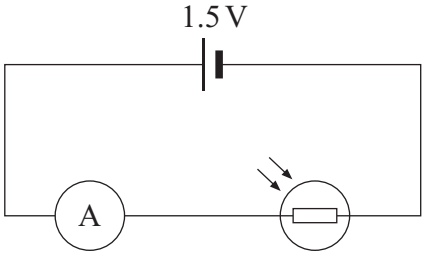

(a) The graph shows how a tennis umpire uses the light meter to decide when it is too dark for play to continue.

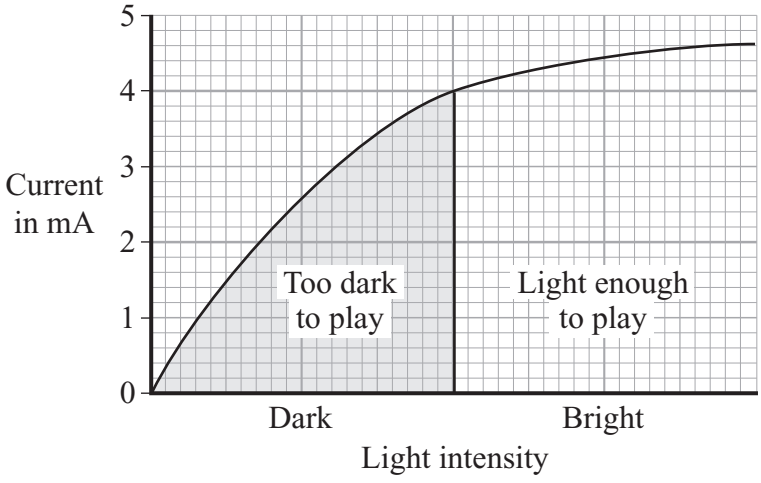

(i) Write down the equation that links current, potential difference and resistance.

.....

(1 mark)

(ii) Calculate the resistance of the light dependent resistor (LDR) at the point when it becomes too dark for play to continue.

Show clearly how you work out your answer.
(1000 mA = 1 A)

.....

.....

.....

Resistance = ... Ω

(3 marks)

4.2.1.3 Current, resistance and potential difference

Question 16 · continued

BLANK

(b) The current-voltage (potential difference) graph for an LDR in daylight is drawn below.

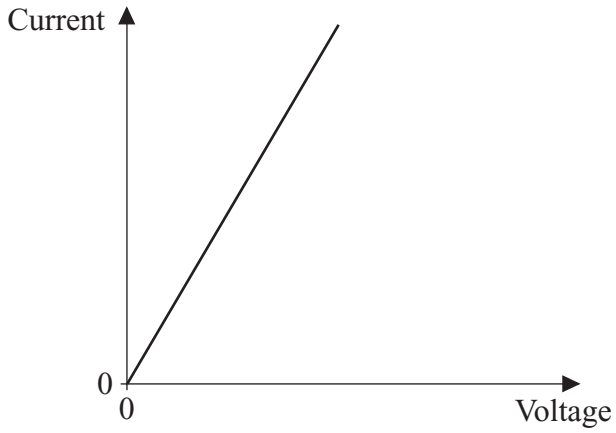

Draw a second line on the graph to show how the current may change with the voltage when the LDR is in the dark. *(1 mark)*

5

Turn over for the next question

4.2.1.3 Current, resistance and potential difference

Question 17

June 2006 | 3462 | Original Q1 | Legacy

1 The diagram shows how a student joined several components, including a 6-volt lamp and four identical 1.5 volt cells, in a circuit.

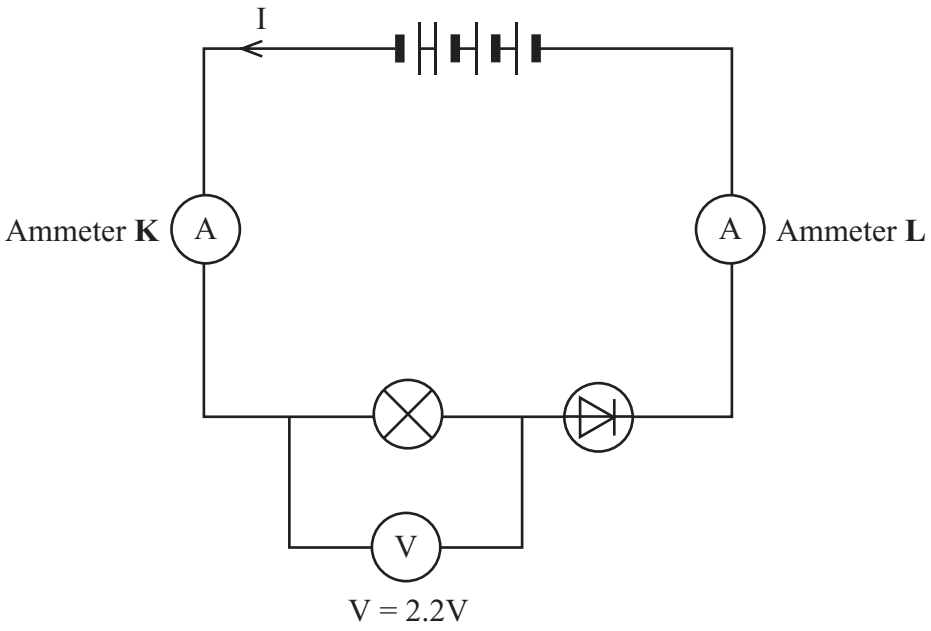

(a) The reading on ammeter **K** is 0.05 A.

What is the reading on ammeter **L**?

.....

(1 mark)

(b) The student expected the lamp in the diagram to be much brighter and the reading on the voltmeter to be 6 volts.

(i) Give **two** reasons why the reading on the voltmeter is much less than 6 volts. The voltmeter is working correctly.

1.....

.....

2.....

.....

(2 marks)

Question 17 · continued

BLANK

(ii) The student decides that the lamp is dim because the diode is connected the wrong way round. When the student reverses the connections to the diode the lamp goes out.

Explain why.

.....

.....

.....

.....

(2 marks)

(c) The graph shows how the current through a filament lamp changes as the voltage (potential difference) across it changes.

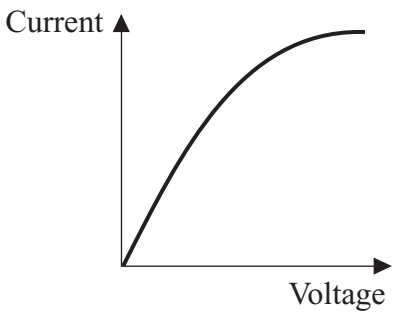

Explain why the graph is not a straight line.

To gain full marks in this question you should write your ideas in good English. Put them into a sensible order and use the correct scientific words.

.....

.....

.....

.....

.....

.....

.....

(4 marks)

9

4.2.1.3 Current, resistance and potential difference

Question 18

June 2006 | 3462 | Original Q7 | Legacy

7 The diagram shows the circuit for a simple light meter.

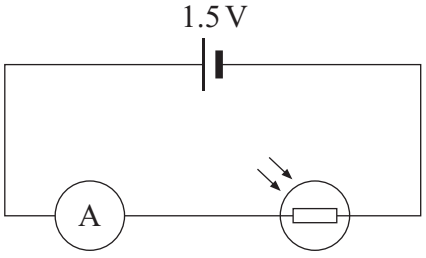

(a) The graph shows how a tennis umpire uses the light meter to decide when it is too dark for play to continue.

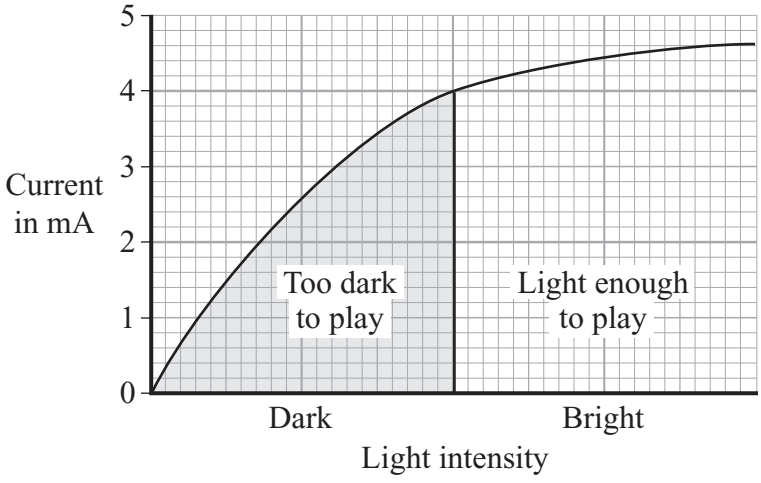

(i) Write down the equation that links current, potential difference and resistance.

.....

(1 mark)

(ii) Calculate the resistance of the light dependent resistor (LDR) at the point when it becomes too dark for play to continue.

Show clearly how you work out your answer.
(1000 mA = 1 A)

.....

.....

.....

Resistance = ... Ω

(3 marks)

4.2.1.3 Current, resistance and potential difference

Question 18 · continued

BLANK

(b) The current-voltage (potential difference) graph for an LDR in daylight is drawn below.

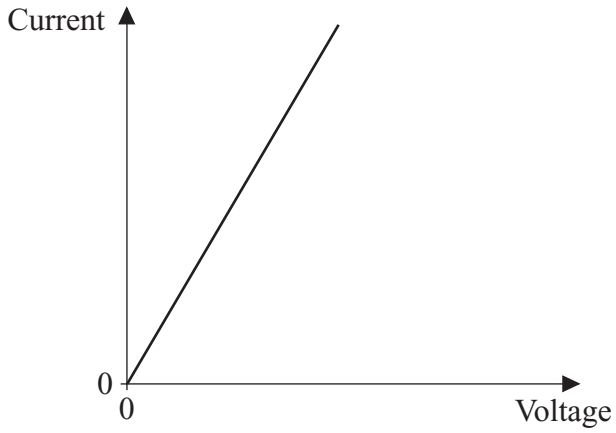

Draw a second line on the graph to show how the current may change with the voltage when the LDR is in the dark. *(1 mark)*

5

Turn over for the next question

4.2.1.3 Current, resistance and potential difference

Question 19

November 2007 | PHY1A | Original Q8 | Legacy

QUESTION EIGHT

Transformers are used in the National Grid.

8A Two types of transformer are used in various parts of the National Grid.

Which row in the table shows the correct locations of the two types of transformer?

	Between generators and power lines	Between power lines and substation	Between substation and people's homes
1	step-down	step-down	step-up
2	step-down	step-up	step-up
3	step-up	step-down	step-down
4	step-up	step-up	step-down

8B Transformers alter the potential difference across the power lines and the current through the power lines. These changes affect the efficiency of the power lines.

Which row in the table is correct?

	Potential difference across power lines	Current through power lines	Efficiency of transmission
1	decreased	decreased	decreased
2	decreased	increased	increased
3	increased	decreased	increased
4	increased	increased	increased

4.2.1.3 Current, resistance and potential difference

Question 19 · continued

8C The table shows the percentage of energy wasted as heat and sound by four different transformers.

Which transformer has the highest efficiency?

Transformer	Percentage of energy supplied to transformer which is wasted as sound	Percentage of energy supplied to transformer which is wasted as heat
1	1.1	7.4
2	1.2	4.7
3	1.3	5.4
4	1.4	6.9

8D The amount of electricity that a device transforms depends on the rate at which the device transforms energy and . . .

1 how long the device is switched on.

2 the current through the device.

3 the potential difference across the device.

4 the power of the device.

4.2.1.3 Current, resistance and potential difference

Question 20

January 2008 | PHY2H | Original Q1 | Legacy

1 (a) The diagram shows the circuit used to investigate the resistance of a material.
The diagram is incomplete: the ammeter and voltmeter are missing.

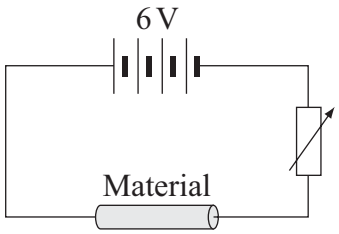

(i) Draw the symbols for the ammeter and voltmeter on the diagram in the correct places. *(2 marks)*

(ii) How can the current through the material be changed?

.....

.....

(1 mark)

(b) The material, called conducting putty, is rolled into cylinders of different lengths but with equal thicknesses.

Graph 1 shows how the resistance changes with length.

Graph 1

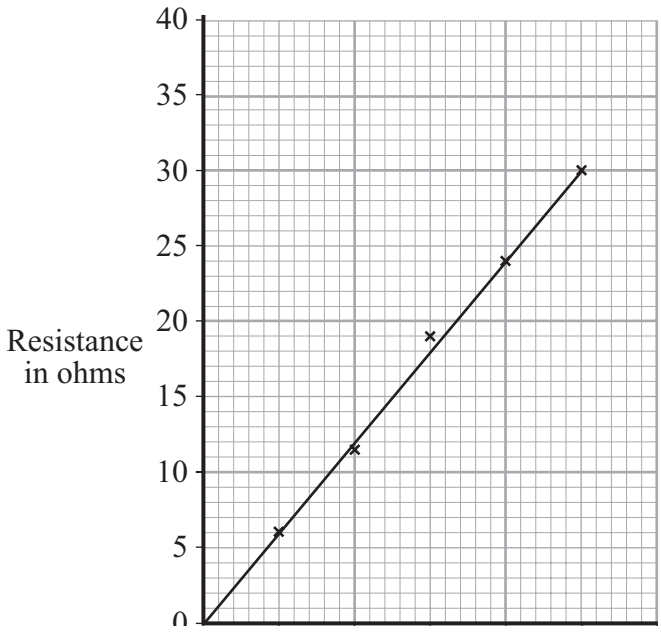

4.2.1.3 Current, resistance and potential difference

Question 20 · continued

BLANK

(i) Why has the data been shown as a line graph rather than a bar chart?

.....

.....

(1 mark)

(ii) The current through a 30 cm length of conducting putty was 0.15 A.

Use **Graph 1** to find the resistance of a 30 cm length of conducting putty.

Resistance = ... ohms

(1 mark)

(iii) Use your answer to (b)(ii) and the equation in the box to calculate the potential difference across a 30 cm length of conducting putty.

potential difference = current × resistance

Show clearly how you work out your answer.

.....

.....

.....

Potential difference = ... volts

(2 marks)

Question 1 continues on the next page

Question 20 · continued

BLANK

(c) A second set of data was obtained using thicker pieces of conducting putty. Both sets of results are shown in **Graph 2**.

Graph 2

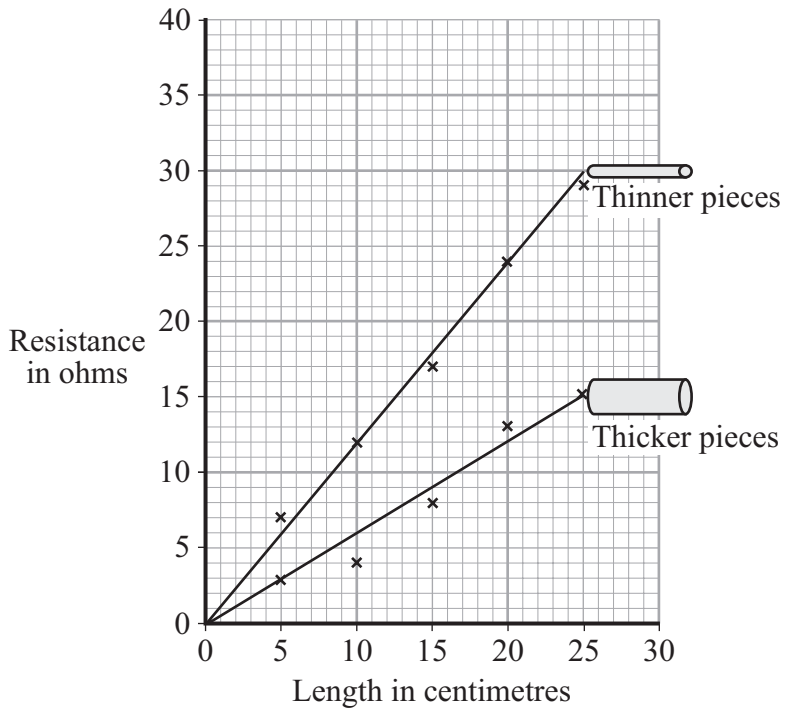

(i) What is the relationship between the resistance and the thickness of the conducting putty?

.....

.....

(1 mark)

(ii) Name **one** error that may have reduced the accuracy of the results.

.....

(1 mark)

(iii) How could the reliability of the data have been improved?

.....

.....

(1 mark)

10

4.2.1.3 Current, resistance and potential difference

Question 21

3 The picture shows an advert for an electric mobility scooter.

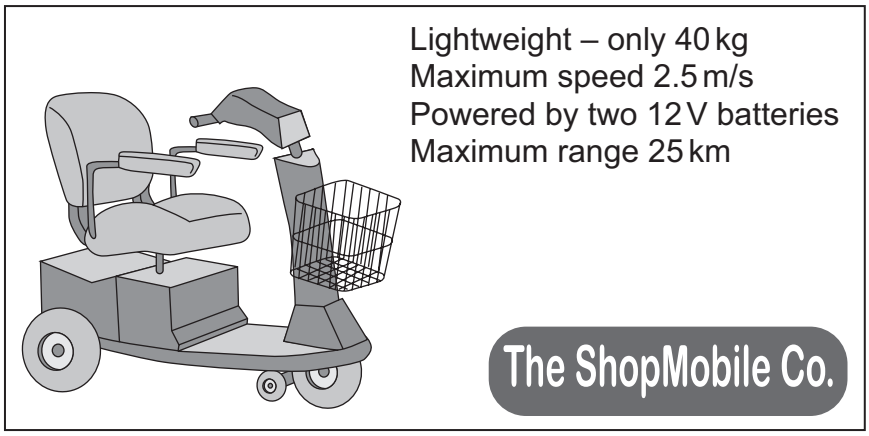

(a) The batteries are joined in series.

(i) What is the potential difference provided by the batteries to the motor?

.....

(1 mark)

(ii) The batteries supply a *direct current (d.c.)*.

What is a *direct current (d.c.)*?

.....

.....

(1 mark)

(b) At 2.5 m/s on flat ground, the motor takes a current of 3.0 A from the batteries.

(i) Explain why a bigger current is taken from the batteries when the scooter is going uphill at 2.5 m/s.

.....

.....

.....

.....

(2 marks)

Question 21 · continued

BLANK

(ii) What effect does travelling uphill have on the range of the scooter?

.....

(1 mark)

(c) The mass of the scooter driver is 80 kg.

Use the equation in the box to calculate the kinetic energy of the scooter **and** driver when they are travelling at maximum speed.

$$\text{kinetic energy} = \frac{1}{2} \times \text{mass} \times \text{speed}^2$$

Show clearly how you work out your answer.

.....

.....

Kinetic energy = ... J

(2 marks)

(d) A battery which has run down is recharged in 8 hours. The average current delivered by the battery charger is 1.5 A.

Use the equation in the box to calculate the maximum charge stored by **both** batteries.

$$\text{charge} = \text{current} \times \text{time}$$

Show clearly how you work out your answer and give the unit.

.....

.....

Charge stored = ...

(3 marks)

10

4.2.1.3 Current, resistance and potential difference

Question 22

6 (a) The diagram shows a transformer.

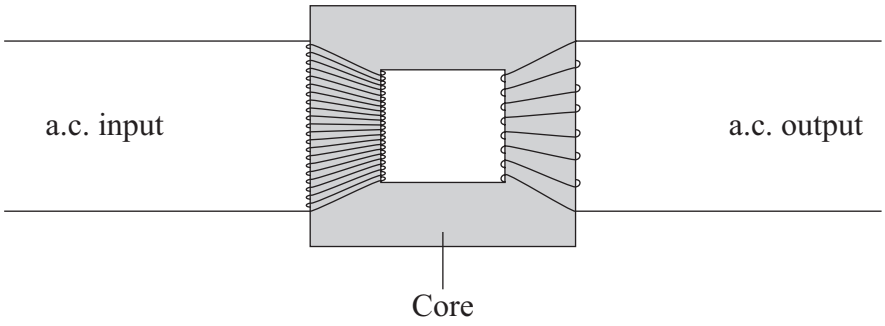

(i) Is the transformer in the diagram being used as a step-up transformer or as a step-down transformer?

Put a tick (✓) in the box next to your answer.

a step-up transformer ☐

a step-down transformer ☐

Explain your answer.

.....

.....

(1 mark)

(ii) Why is insulated wire, and not uninsulated wire, used to make the coils?

.....

.....

(1 mark)

(iii) Why is the core made of iron?

.....

.....

(1 mark)

4.2.1.3 Current, resistance and potential difference

Question 22 · continued

BLANK

(b) A transformer has 500 turns on its primary coil and 7500 turns on its secondary coil. The potential difference across the primary coil is 150 volts.

Use the equation in the box to calculate the potential difference across the secondary coil.

$$\frac{\text{p.d. across primary}}{\text{p.d. across secondary}} = \frac{\text{number of turns on primary}}{\text{number of turns on secondary}}$$

Show clearly how you work out your answer.

.....

.....

.....

Potential difference across the secondary coil = ... volts

(2 marks)

(c) Step-down transformers are used between power lines and people's houses.

Explain why.

.....

.....

.....

(2 marks)

(d) Before 1926, large towns had their own local power stations. After 1926, these power stations were connected to form the National Grid.

Explain the advantage of having a National Grid system.

.....

.....

.....

.....

(2 marks)

9

4.2.1.3 Current, resistance and potential difference

Question 23

March 2008 | PHY1BP | Original Q3 | Legacy

QUESTION THREE

A student investigated the absorption of infra red radiation by a block of gelatine.

She placed a block of gelatine on a piece of graph paper and cut the block to a length of 24 cm. She then placed an infra red source touching one end of the block and an infra red detector touching the other end as shown in the diagram.

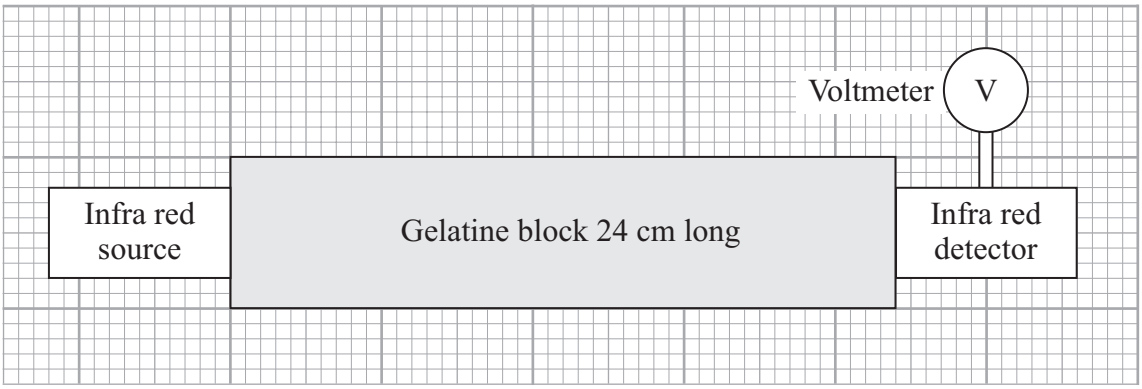

She recorded the output potential difference (p.d.) from the infra red detector.

She then repeated the experiment several times. Each time, she cut 2 cm off the gelatine block and set up the apparatus as shown in the diagram.

The graph shows her results.

The higher the intensity of infra red radiation received by the detector, the greater the output p.d.

Question 23 · continued

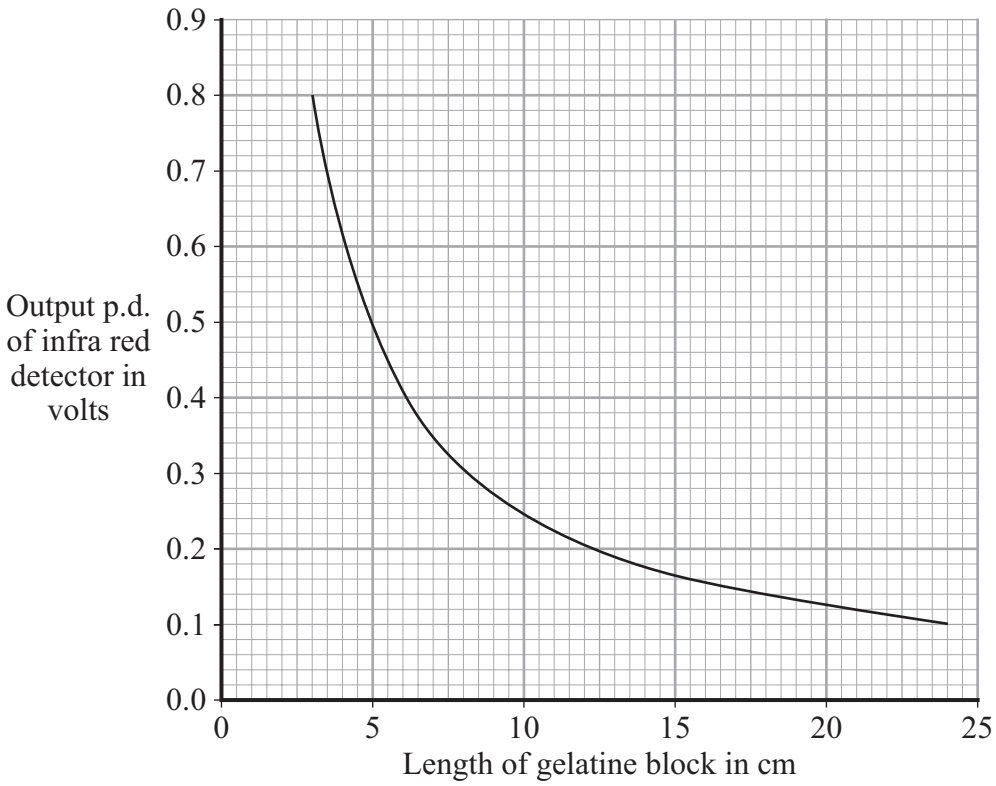

3A What was the dependent variable in this experiment?

1 the position of the infra red source

2 the length of the gelatine block

3 the position of the infra red detector

4 the output p.d. from the infra red detector

3B Which is the best description of the pattern shown by the graph?

1 As the length of the gelatine block increases, the intensity of infra red radiation received by the detector decreases.

2 As the length of the gelatine block increases, the intensity of infra red radiation received by the detector decreases by a similar amount.

3 The longer the gelatine block, the larger the effect of cutting off 2 cm on the increase in the intensity of infra red radiation received by the detector.

4 There is no relationship between the length of the gelatine block and the intensity of infra red radiation received by the detector.

Question 3 continues on the next page

Question 23 · continued

3C The table shows the student's results.

Length of gelatine block in cm	Output p.d. in V
24.0	0.1
12.0	0.2
6.0	0.4
3.0	0.8

Based on the data that the student recorded, what was the sensitivity of the voltmeter?

1 0.1 V

2 0.2 V

3 0.4 V

4 1.0 V

3D Scientists carried out a similar investigation using glass optical fibres in place of the gelatine block. They found that there was no significant reduction in the output p.d. of the infra red detector until the fibre was several kilometres long.

This shows that . . .

1 gelatine absorbs infra red radiation much more strongly than glass.

2 glass is more transparent than water.

3 infra red radiation passes through solids faster than through liquids.

4 infra red radiation can pass through bent optical fibres.

4.2.1.3 Current, resistance and potential difference

Question 24

June 2008 | PHY2H | Original Q1 | Legacy

1 (a) The circuit diagram drawn below includes a component labelled **X**.

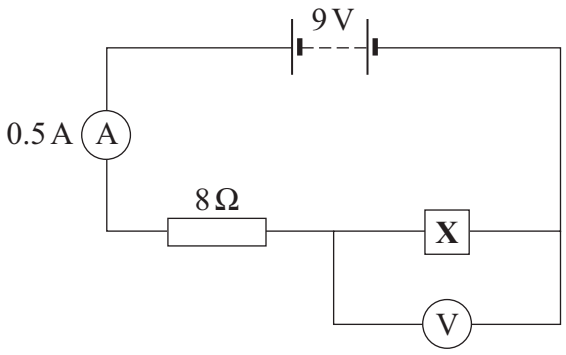

1 (a) (i) Use the equation in the box to calculate the potential difference across the 8 ohm resistor.

potential difference = current × resistance

Show clearly how you work out your answer.

.....

.....

Potential difference = ... volts

(2 marks)

1 (a) (ii) What is the potential difference across component **X**?

.....

(1 mark)

4.2.1.3 Current, resistance and potential difference

Question 24 · continued

for mark

1 (b) The graph shows how the resistance of component **X** changes with temperature.

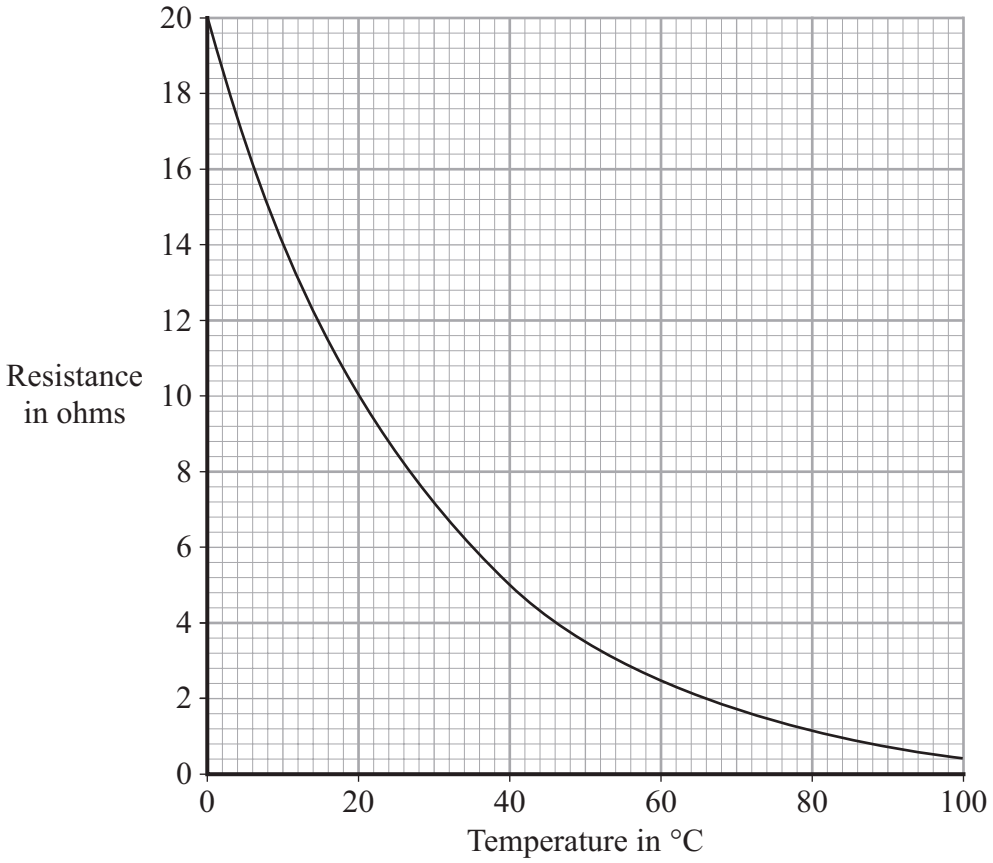

1 (b) (i) What is component **X**?

..... *(1 mark)*

1 (b) (ii) Over which range of temperatures does the resistance of component **X** change the most?

Put a tick (✓) in the box next to your choice.

0 °C to 20 °C ☐

20 °C to 40 °C ☐

40 °C to 60 °C ☐

60 °C to 80 °C ☐

80 °C to 100 °C ☐

(1 mark)

5

4.2.1.3 Current, resistance and potential difference

Question 25

June 2008 | PHY2H | Original Q4 | Legacy

4 The diagram shows two oscilloscope traces, **A** and **B**.

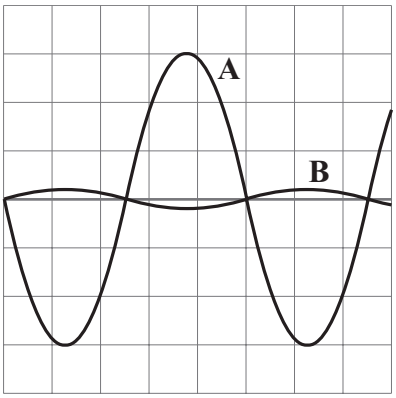

Trace **A** shows how the potential difference between the live and neutral terminals of an electricity supply changes with time.

4 (a) Describe how the potential of the live terminal varies with respect to the neutral terminal of the electricity supply.

.....

.....

(2 marks)

4 (b) What does trace **B** show?

.....

.....

(1 mark)

4 (c) Each horizontal division on the oscilloscope represents 0.005 s.

4 (c) (i) What is the period of this electricity supply?

.....

Period = ... seconds

(1 mark)

4 (c) (ii) Calculate the frequency of the supply.

.....

Frequency = ... hertz

(1 mark)

5

4.2.1.3 Current, resistance and potential difference

Question 26

June 2008 | PHY2H | Original Q6 | Legacy

6 Static electricity can be both useful and a nuisance.

6 (a) The diagram shows a method of producing sandpaper using static electricity.

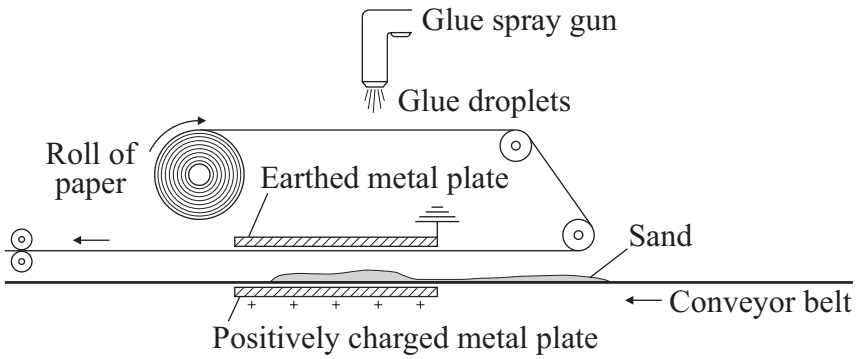

Glue is sprayed onto a moving strip of paper. As the glue leaves the spray gun, the glue breaks up into tiny negatively charged droplets which coat the paper. The sticky paper passes between two metal plates. Sand moving on a conveyor belt also passes between the metal plates.

6 (a) (i) Explain the advantage of having all the droplets of glue negatively charged.

.....

.....

.....

.....

(2 marks)

6 (a) (ii) Explain why the sand moves towards the sticky paper.

.....

.....

.....

.....

(2 marks)

Question 6 continues on the next page

4.2.1.3 Current, resistance and potential difference

Question 26 · continued

for mark

6 (b) People often experience an electric shock when getting out of a car.
This happens because charge is generated as they move around on the car seats.

On a warm dry day, the potential difference between a driver and the car increases to 10 000 volts. As the driver goes to touch the car door, a spark jumps the air gap, transferring 20 joules of energy between the driver and the car.

Use the equation in the box to calculate the initial charge on the driver.

energy transformed = potential difference × charge

Show clearly how you work out your answer and give the unit.

.....

.....

Charge = ...

(3 marks)

7

4.2.1.3 Current, resistance and potential difference

Question 27

June 2008 | PHY3H | Original Q6 | Legacy

6 (a) This notice is on the back of a television set.



The transformer used in the television set has 75 turns on its primary coil. The potential difference (p.d.) across the primary coil is 230 volts and the p.d. across the secondary coil is 32 200 volts.

Use the equation in the box to calculate the number of turns on the secondary coil.

$$\frac{\text{p.d. across primary}}{\text{p.d. across secondary}} = \frac{\text{number of turns on primary}}{\text{number of turns on secondary}}$$

Show clearly how you work out your answer.

.....

.....

.....

Number of turns on the secondary coil = ...

(2 marks)

4.2.1.3 Current, resistance and potential difference

Question 27 · continued

for mark

6 (b) The diagram shows the structure of a transformer.

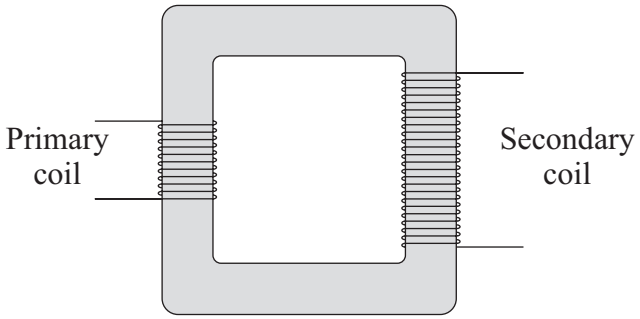

Explain how the transformer works.

.....

.....

.....

.....

.....

.....

(3 marks)

5

4.2.1.3 Current, resistance and potential difference

Question 28

January 2009 | PHY2H | Original Q3 | Legacy

3 The diagram shows a simple type of car rear window heater. The six heating elements are exactly the same.

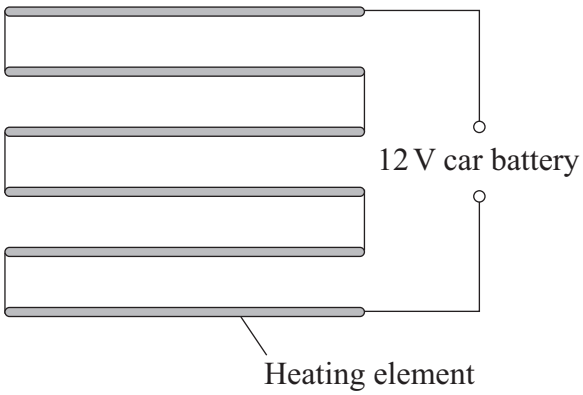

3 (a) Each heating element has a resistance of 5 Ω. The current passing through each element is 0.4 A.

3 (a) (i) Calculate the total resistance of the six heating elements.

Show clearly how you work out your answer.

.....

.....

Total resistance = ... ohms

(2 marks)

3 (a) (ii) Why is the current passing through each element the same?

.....

.....

(1 mark)

3 (a) (iii) What is the total current passing through the whole circuit?

.....

(1 mark)

3 (a) (iv) How is the 12 volt potential difference of the car battery shared between the six heating elements?

.....

.....

(1 mark)

4.2.1.3 Current, resistance and potential difference

Question 28 · continued

for mark

3 (b) It takes the heater two minutes to demist the car window.

Use the equation in the box to calculate how much charge flows through the heater in this time.

charge = current × time

Show clearly how you work out your answer and give the unit.

.....

.....

Charge = ...

(3 marks)

8

Turn over for the next question

4.2.1.3 Current, resistance and potential difference

Question 29

January 2009 | PHY2H | Original Q5 | Legacy

5 (a) Describe the difference between an alternating current (a.c.) and a direct current (d.c.).

.....

.....

.....

.....

(2 marks)

5 (b) The diagram shows the information plate on the bottom of an electric wallpaper steamer.

230 V a.c.	50 Hz	2.3 kW

5 (b) (i) Use the equation in the box to calculate the current used by the steamer.

power = current × potential difference

Show clearly how you work out your answer.

.....

.....

Current ..... A

(2 marks)

5 (b) (ii) Which **one** of the following fuses should be used inside the plug of the steamer?

Draw a ring around your answer.

1 A **3 A** **5 A** **10 A** **13 A**

(1 mark)

5

4.2.1.3 Current, resistance and potential difference

Question 30

June 2009 | PHY2H | Original Q2 | Legacy

2 (a) A plastic ruler is rubbed with a cloth.

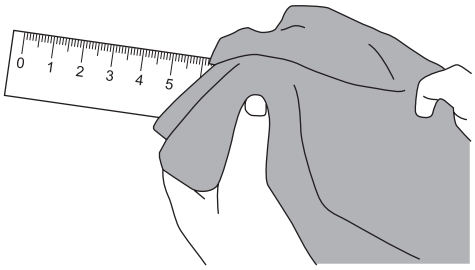

The ruler becomes negatively charged.

2 (a) (i) Complete the following sentence by drawing a ring around the correct line in the box.

The ruler becomes negatively charged because it has

gained electrons
lost neutrons
lost protons

.

(1 mark)

2 (a) (ii) How could you show that the ruler is charged?

.....

.....

(1 mark)

Question 30 · continued

for mark

2 (b) People often become electrostatically charged as they get out of a car.
This happens because their clothing rubs against the car seat.

A scientist was asked to find out whether the amount of charge on a person depended on the type of material which covered the car seat.
Three people, **A**, **B** and **C**, were used to test three different types of seat covering.

In each test, the person got out of the car and stood on a thick sheet of plastic.
The scientist then measured the potential difference between the person and the car body.
The results of the investigation are displayed in the bar chart.

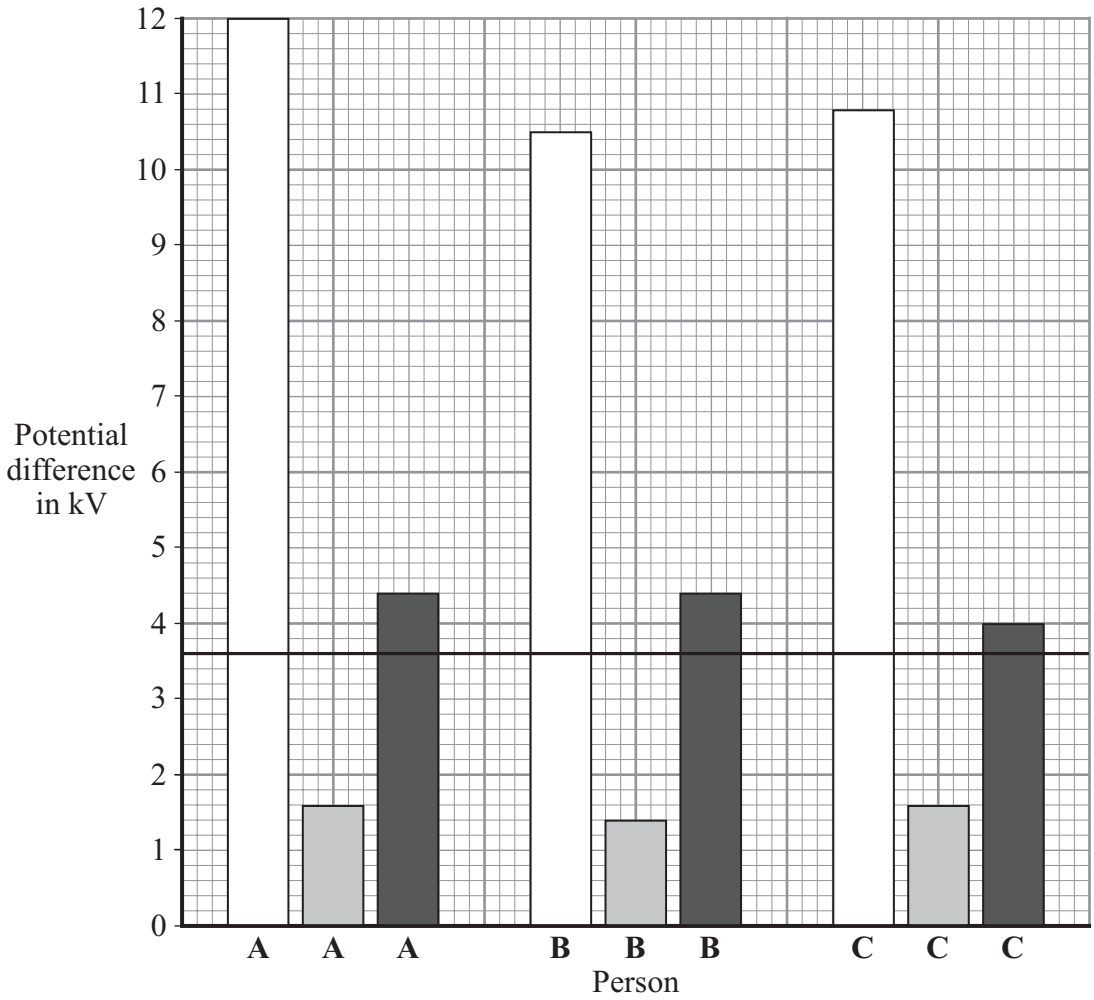

Question 2 continues on the next page

4.2.1.3 Current, resistance and potential difference

Question 30 · continued

for mark

2 (b) (i) Explain why the measurement was made with the person standing on a thick sheet of plastic.

.....

.....

.....

.....

(2 marks)

2 (b) (ii) To make this a fair test, the three people, **A**, **B** and **C**, each wore the same type of clothing.

Suggest a reason why this was important.

.....

.....

(1 mark)

2 (b) (iii) The smallest scale division on the voltmeter was 0.1 kV.

Suggest why, from the data, it was **not** necessary to increase the precision of the potential difference measurements.

.....

.....

(1 mark)

2 (b) (iv) Explain why this investigation may cause a manufacturer to change the material used to cover car seats.

.....

.....

.....

.....

(2 marks)

8

4.2.1.3 Current, resistance and potential difference

Question 31

June 2009 | PHY2H | Original Q6 | Legacy

6 The diagram shows someone accidentally touching the live wire inside a dismantled 230 volt mains electricity socket.

A current flows through the person giving him an electric shock.

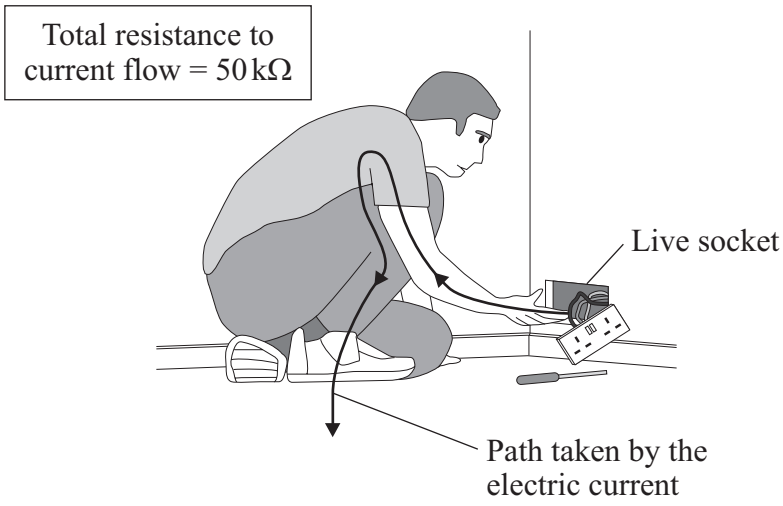

6 (a) (i) Use the equation in the box to calculate the current that will flow through the person.

potential difference = current × resistance

Show clearly how you work out your answer.

.....

.....

Current = ... A

(2 marks)

6 (a) (ii) Rubber is a good insulator.

Explain why it is a good idea for electricians to wear rubber soled boots when working.

.....

.....

.....

.....

(2 marks)

Question 31 · continued

for mark

6 (b) If the current flowing through a person is too high, the person cannot let go of the electrical source.

Different people were tested to see whether the ability to let go of an electrical source depended on the frequency of the current.

The results of the test are shown in the graph.

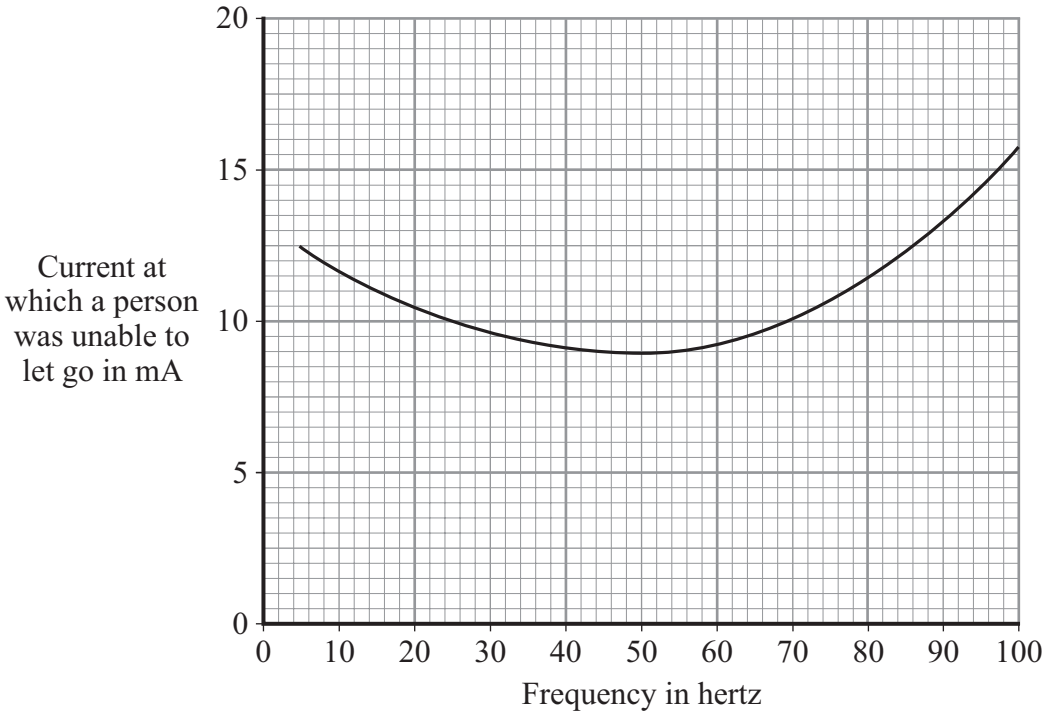

6 (b) (i) What is the frequency of the mains electricity supply in the UK?

.....

(1 mark)

6 (b) (ii) From a safety point of view, is the frequency of the UK mains electricity supply suitable?

Give a reason for your answer.

.....

.....

(1 mark)

Question 6 continues on the next page

4.2.1.3 Current, resistance and potential difference

Question 31 · continued

for mark

6 (c) The diagram shows how the electric supply cable is connected to an electric kettle. The earth wire is connected to the metal case of the kettle.

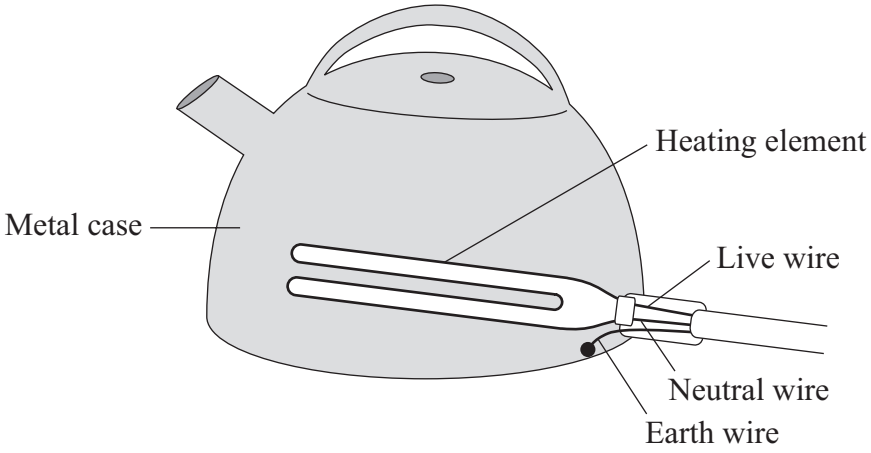

If a fault makes the metal case live, the earth wire and the fuse inside the plug protect anyone using the kettle from an electric shock.

Explain how.

.....

.....

.....

.....

(2 marks)

8

4.2.1.3 Current, resistance and potential difference

Question 32

June 2009 | PHY3H | Original Q2 | Legacy

2 The diagram shows some parts of a torch which works without batteries.
The coil is part of a complete circuit with the LED (light-emitting diode).

You have to shake the torch for a short time and then it is ready to use.

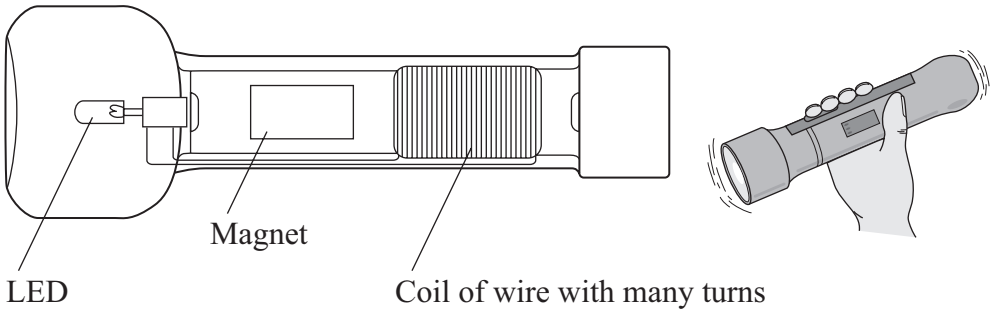

2 (a) Arrange the letters, **A**, **B**, **C**, **D** and **E**, in the correct order to explain how shaking the torch produces an electric current.

A An electric current is induced in the circuit.

B The magnetic field cuts through the coil.

C The magnet moves in and out of the coil.

D A potential difference (p.d.) is induced across the ends of the coil.

E The torch is shaken to and fro.

The first letter has been done for you.

E				

(2 marks)

2 (b) Give **two** changes which you would make to the design of the torch to increase the size of the induced potential difference.

1 .....

.....

2 .....

.....

(2 marks)

4.2.1.3 Current, resistance and potential difference

Question 32 · continued

for mark

2 (c) A few minutes after shaking, the LED gets dimmer and then stops giving out light.

A student tests the torch. She shakes it for a period of time. Then she switches it on and times how long the light lasts.

These are her results.

Period of time torch is shaken measured in seconds	How long the light lasts measured in seconds
30	168
60	312
90	420
120	546
150	654

2 (c) (i) What conclusion can the student come to on the basis of these results?

.....

.....

(1 mark)

2 (c) (ii) The student's friend says that the results are **not** reliable. Her friend is correct.

Give **two** reasons why.

1 .....

.....

.....

2 .....

.....

.....

(2 marks)

7

4.2.1.3 Current, resistance and potential difference

Question 33

4 The diagram shows a simple light-sensing circuit.

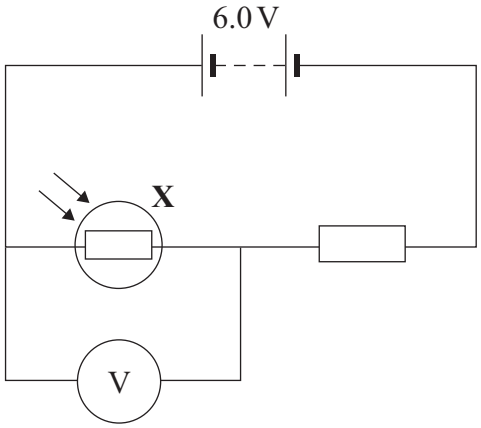

4 (a) The graph, supplied by the manufacturer, shows how the resistance of the component labelled **X** varies with light intensity.

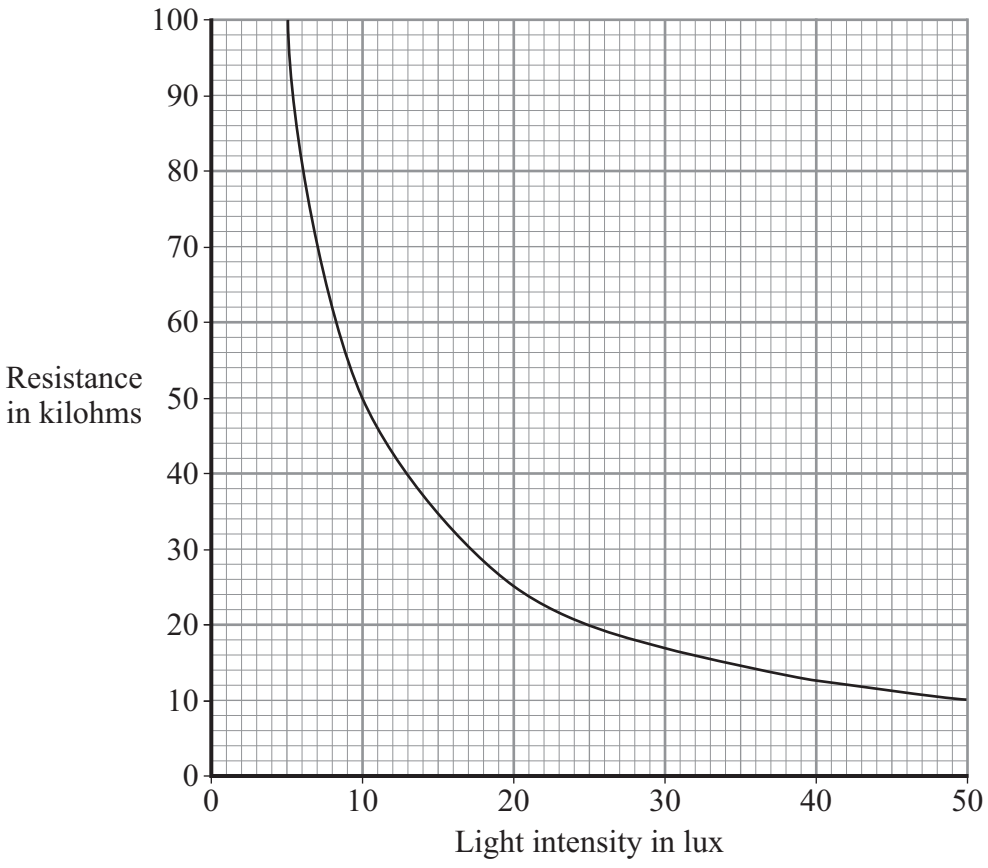

4.2.1.3 Current, resistance and potential difference

Question 33 · continued

for mark

4 (a) (i) What is component **X**?

.....

(1 mark)

4 (a) (ii) Use the graph to find the resistance of component **X** when the light intensity is 20 lux.

.....

(1 mark)

4 (a) (iii) When the light intensity is 20 lux, the current through the circuit is 0.0002 A.

Use the equation in the box to calculate the reading on the voltmeter when the light intensity is 20 lux.

potential difference = current × resistance

Show clearly how you work out your answer.

.....

.....

Voltmeter reading = ... volts

(2 marks)

Question 4 continues on the next page

4.2.1.3 Current, resistance and potential difference

Question 33 · continued

for mark

4 (b) Use the grid below to show how the voltmeter reading in the light-sensing circuit varies with light intensity.

4 (b) (i) Add a suitable scale to the *y*-axis (vertical axis).

(1 mark)

4 (b) (ii) Complete the sketch graph by drawing a line on the grid to show how the voltmeter reading will vary with light intensity.

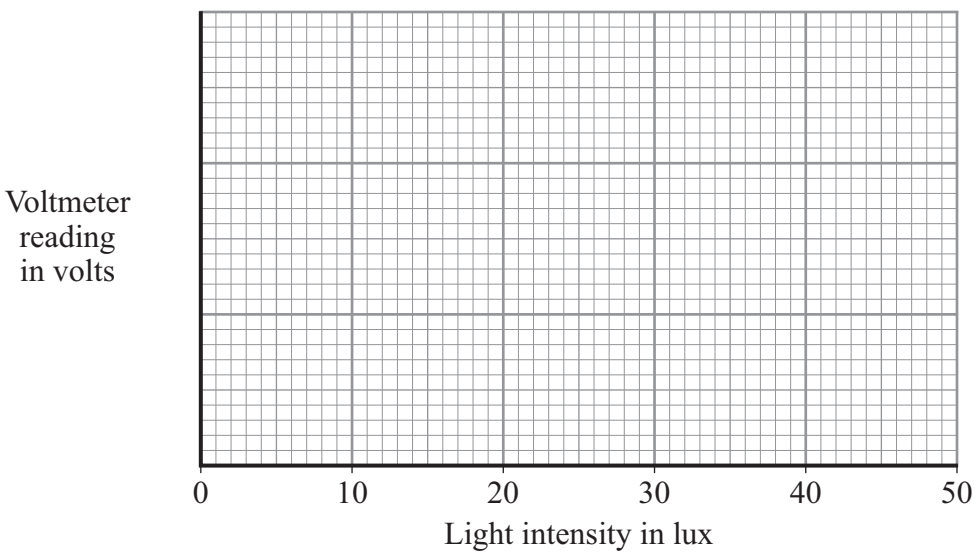

(2 marks)

4 (c) The following passage is taken from the technical data supplied for component **X** by the manufacturer.

> For any given light intensity, the resistance of this component can vary by plus or minus 50% of the value shown on the **graph of light intensity and resistance**.

4 (c) (i) Calculate the maximum resistance that component **X** could have at 20 lux light intensity.

.....

Maximum resistance = ... kilohms

(1 mark)

4 (c) (ii) Explain why this light-sensing circuit would **not** be used to measure values of light intensity.

.....

.....

.....

(2 marks)

10

4.2.1.3 Current, resistance and potential difference

Question 34

January 2010 | PHY2H | Original Q5 | Legacy

5 (a) The diagram shows a student touching the metal dome of a Van de Graaff generator. When the generator is switched on, the metal dome becomes negatively charged.

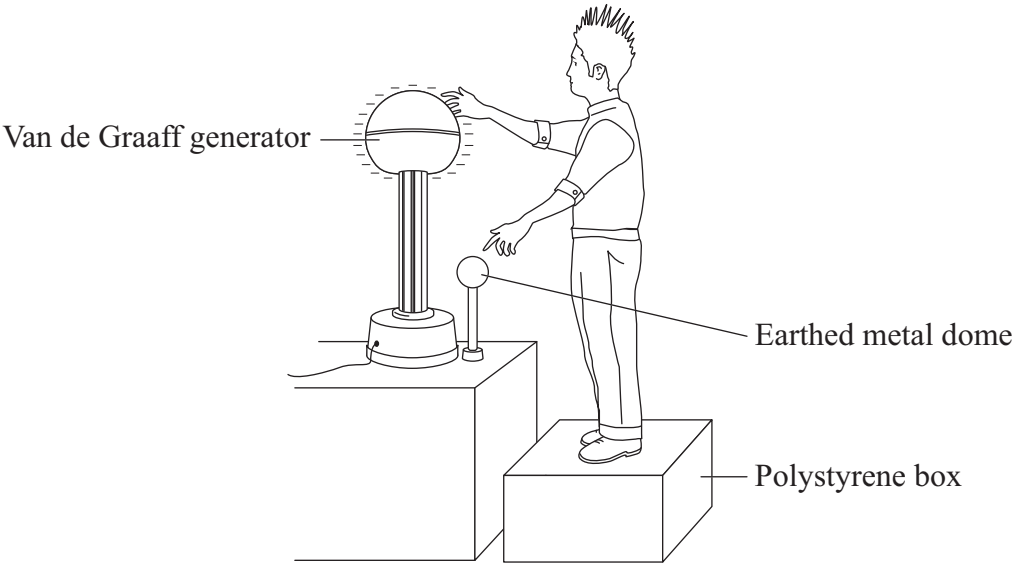

Explain why the student's hair stands on end when the generator is switched on.

.....

.....

.....

(2 marks)

5 (b) When the potential difference between the student and a nearby earthed metal dome reached 15 kV, a spark jumped between the student and the earthed dome. The spark transformed 30 mJ of energy into heat, light and sound. (1 mJ = 0.001 J)

Use the equation in the box to calculate the charge carried by the spark.

energy transformed = potential difference × charge

.....

.....

Charge transferred = ... coulombs

(2 marks)

5 (c) What name is given to the rate of flow of charge?

.....

(1 mark)

5

4.2.1.3 Current, resistance and potential difference

Question 35

5 (a) The diagram shows the basic structure of a step-up transformer.

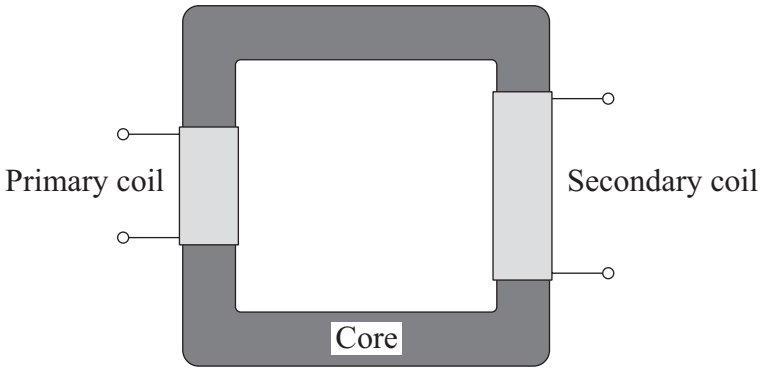

5 (a) (i) What is the core made of?

.....

(1 mark)

5 (a) (ii) Explain how an alternating input produces an alternating output.

.....

.....

.....

.....

.....

.....

(3 marks)

4.2.1.3 Current, resistance and potential difference

Question 35 · continued

for mark

5 (b) Fly killers are used in kitchens and food stores because flying insects carry diseases which cause food poisoning.

The diagram shows the inside of one design. Insects are attracted to a fluorescent lamp. The metal grids have a high potential difference (p.d.) between them. The insects are killed as they fly between the grids.

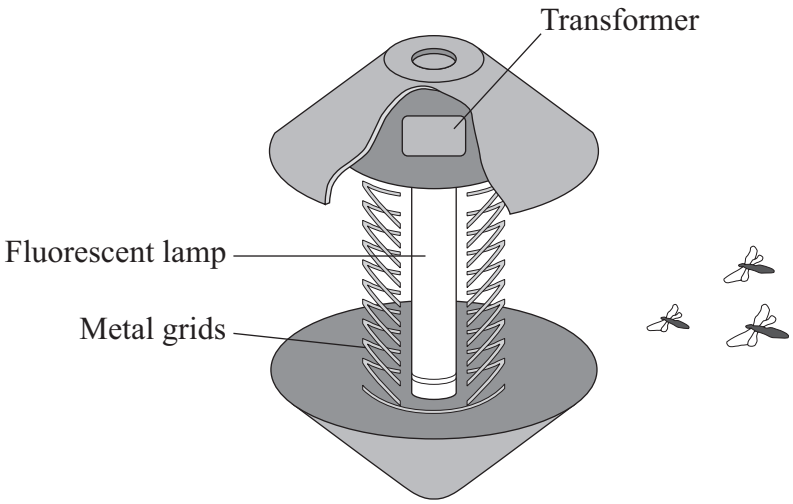

A transformer is used in the fly killer. There is a p.d. of 230 V across the primary coil. There are 300 turns of wire on the primary coil and 4000 turns on the secondary coil.

Use the equation in the box to calculate the p.d. across the secondary coil.

$$\frac{\text{p.d. across primary}}{\text{p.d. across secondary}} = \frac{\text{number of turns on primary}}{\text{number of turns on secondary}}$$

Show clearly how you work out your answer.

.....

.....

.....

.....

.....

Potential difference = ...V

(3 marks)

7

4.2.1.3 Current, resistance and potential difference

Question 36

6 The diagram shows the inside of an oil pipeline and a student's design for a meter to measure the flow of oil.

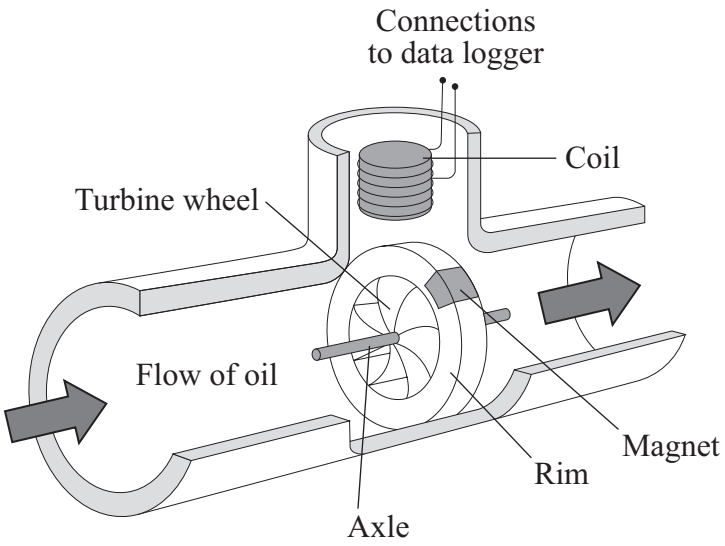

As oil flows through the pipeline, the oil rotates a turbine wheel. Above the turbine wheel is a coil of wire connected to a data logger. There is a magnet in the rim of the turbine wheel. The turbine wheel spins and this induces a varying potential difference (p.d.) across the ends of the coil. This varying p.d. is recorded by the data logger.

6 (a) Complete the sentence by writing in the space.

The faster the oil flows through the pipeline, the ..... the maximum p.d. across the coil.

(1 mark)

6 (b) Explain why a varying p.d. is induced across the coil even when the rate of flow of oil remains constant.

.....

.....

.....

.....

.....

.....

(3 marks)

4.2.1.3 Current, resistance and potential difference

Question 36 · continued

for mark

6 (c) Suggest **two** changes to the design of the meter which would increase the maximum p.d. across the coil for the same flow of oil.

Change 1 .....

.....

Change 2 .....

.....

(2 marks)

6

Turn over for the next question

4.2.1.3 Current, resistance and potential difference

Question 37

June 2010 | PHY2H | Original Q5 | Legacy

5 (a) The graphs show how the velocity of two cars, **A** and **B**, change from the moment the car drivers see an obstacle blocking the road.

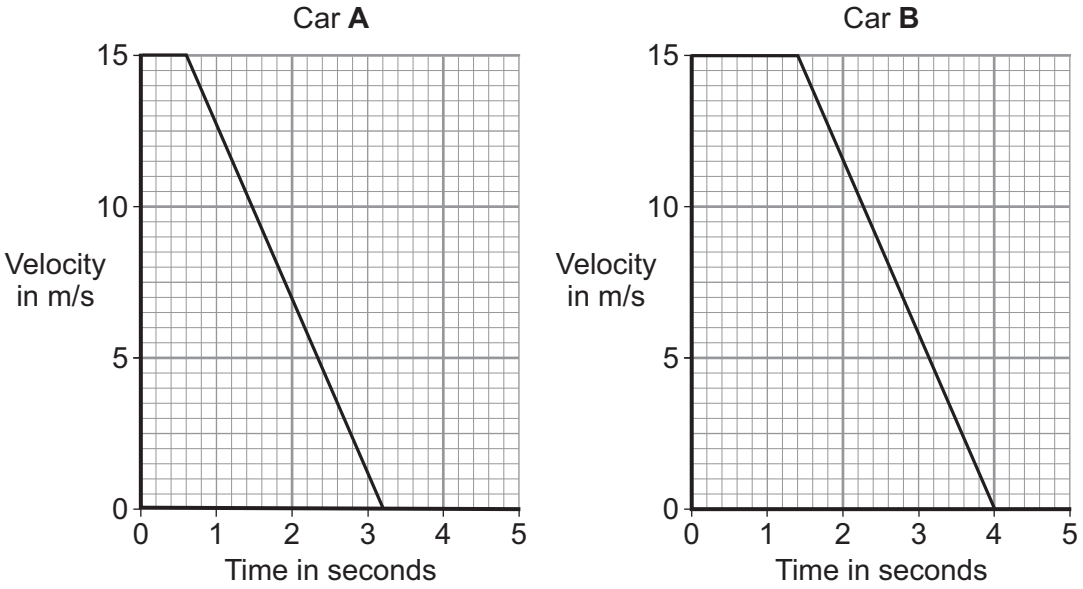

One of the car drivers has been drinking alcohol. The other driver is wide awake and alert.

5 (a) (i) How does a comparison of the two graphs suggest that the driver of car **B** is the one who has been drinking alcohol?

.....

.....

(1 mark)

5 (a) (ii) How do the graphs show that the two cars have the same deceleration?

.....

.....

(1 mark)

5 (a) (iii) Use the graphs to calculate how much further car **B** travels before stopping compared to car **A**.

Show clearly how you work out your answer.

.....

.....

.....

Additional stopping distance = ... m

(3 marks)

4.2.1.3 Current, resistance and potential difference

Question 37 · continued

5 (b) In a crash test laboratory, scientists use sensors to measure the forces exerted in collisions. The graphs show how the electrical resistance of 3 experimental types of sensor, **X**, **Y** and **Z**, change with the force applied to the sensor.

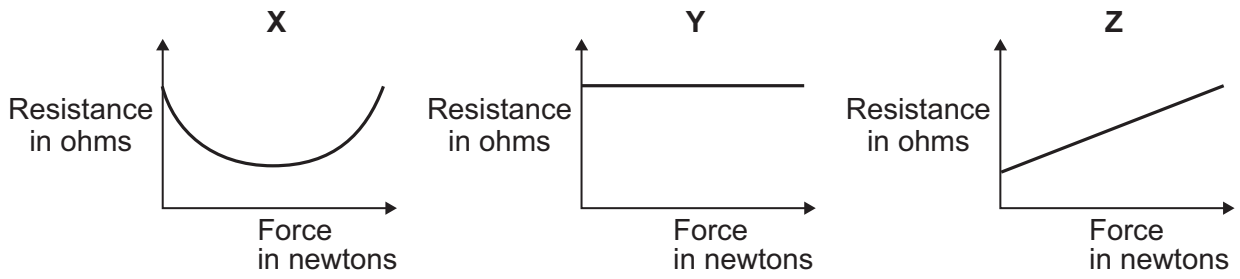

Which of the sensors, **X**, **Y** or **Z**, would be the best one to use as a force sensor?

.....

Give a reason for your answer.

.....

.....

.....

.....

(2 marks)

7

4.2.1.3 Current, resistance and potential difference

Question 38

June 2010 | PHY2H | Original Q7 | Legacy

7 A homeowner has installed electric underfloor heating in the kitchen. When the heating is switched on, an electric current flows through wires running under the tiled floor surface.

7 (a) What is an electric current?

.....

(1 mark)

7 (b) The graph shows how the power output of an underfloor heating system depends on the area of the floor that is heated.

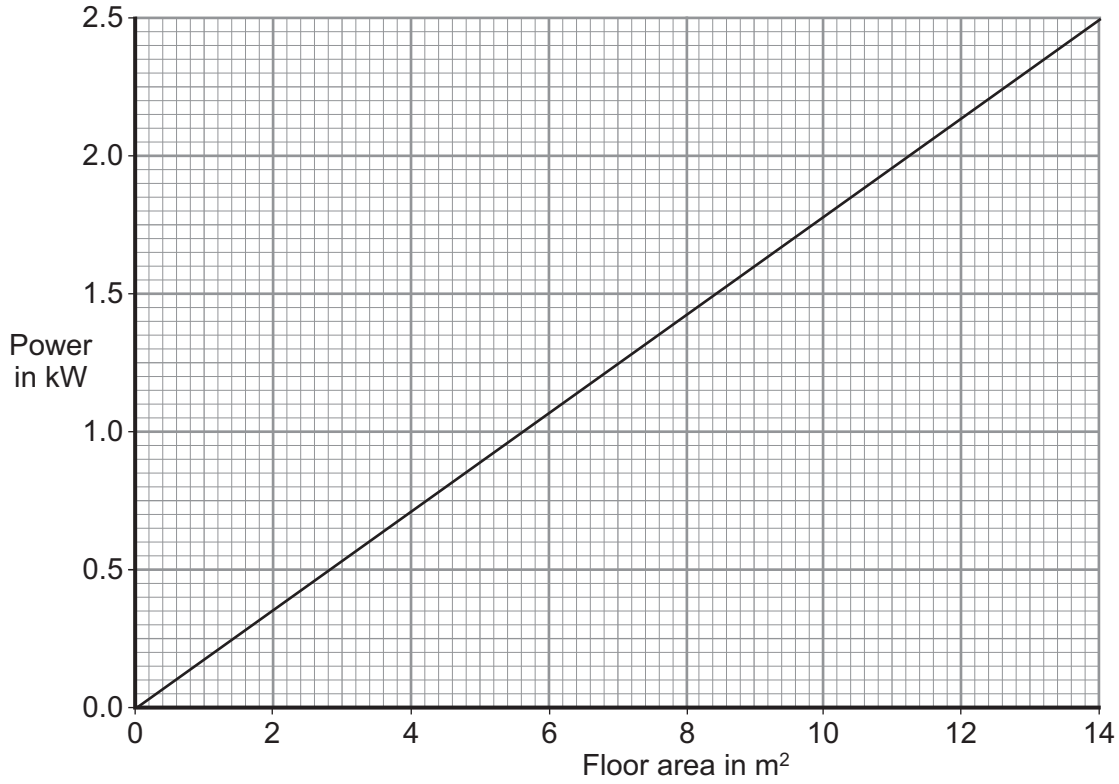

The area of the homeowner's kitchen floor is 9.0 m^2.

Use the graph and the equation in the box to calculate the current drawn from the 230 V mains supply by the heating system.

power = current × potential difference

Show clearly how you work out your answer and give the unit.

.....

.....

.....

.....

Current = ...

(4 marks)

5

4.2.1.3 Current, resistance and potential difference

Question 39

November 2010 | PHY1AP | Original Q7 | Legacy

QUESTION SEVEN

The diagram shows a power station connected to the National Grid. The National Grid distributes the electrical energy to homes.

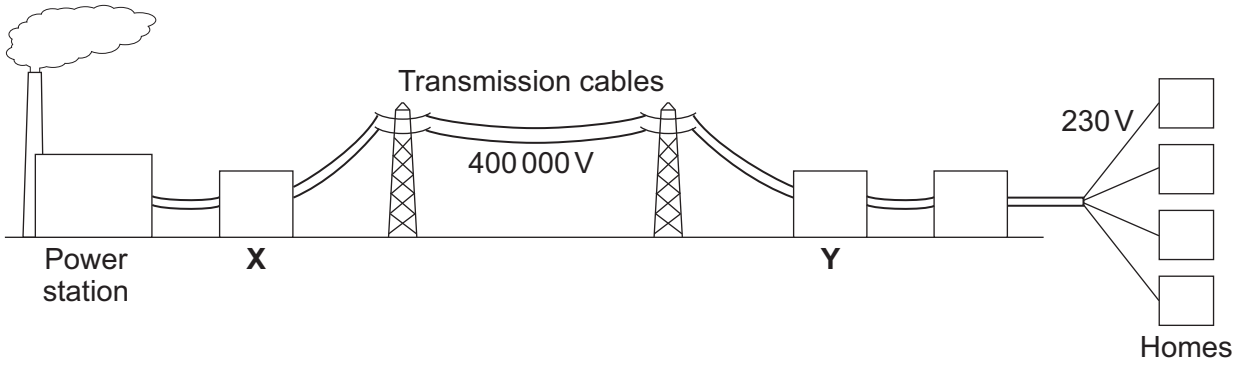

7A Which row in the table correctly describes the transformers **X** and **Y**?

	X	Y
1	step-down	step-down
2	step-down	step-up
3	step-up	step-down
4	step-up	step-up

7B Why is the voltage (potential difference) across the transmission cables of the National Grid very high?

1 so that the electricity travels faster

2 so that the electric current is large

3 to make the transmission of electricity safe

4 to reduce energy loss from the cables

7C A transformer changes both the voltage and the current.

Which row in the table correctly describes the changes of current in transformers **X** and **Y**?

	X	Y
1	decrease	decrease
2	decrease	increase
3	increase	decrease
4	increase	increase

4.2.1.3 Current, resistance and potential difference

Question 39 · continued

7D In the power station, the boiler has an efficiency of 0.75. The turbine and generator system have an efficiency of 0.80.

$$\text{efficiency} = \frac{\text{useful energy transferred by the device}}{\text{total energy supplied to the device}}$$

For every 1000 J of energy supplied to the boiler, what is the useful output energy from the turbine and generator system?

1 600 J

2 750 J

3 800 J

4 1670 J

Turn over for the next question

4.2.1.3 Current, resistance and potential difference

Question 40

5 The current – potential difference graph for one type of electrical component is drawn below.

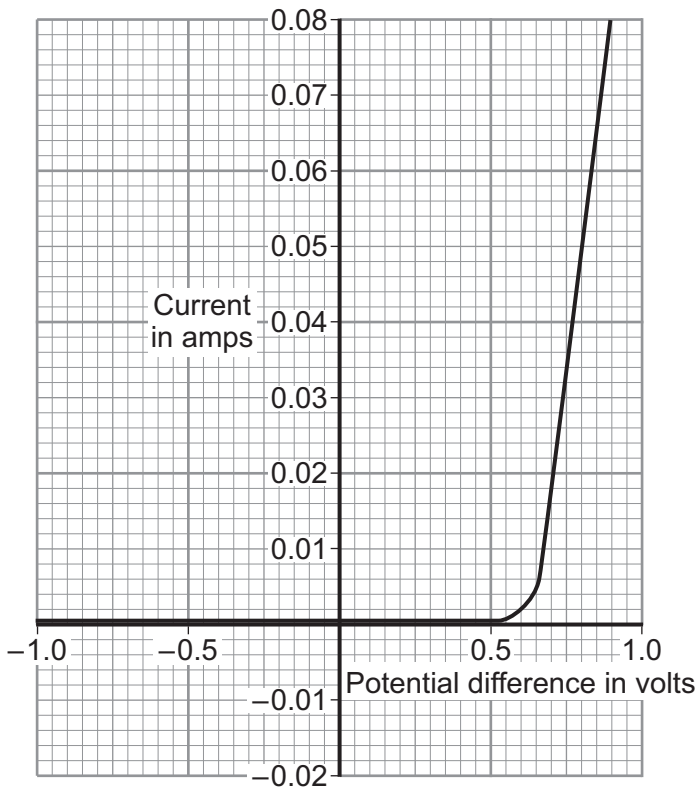

5 (a) What is the component?

.....

(1 mark)

4.2.1.3 Current, resistance and potential difference

Question 40 · continued

5 (b) Complete the diagram to show a circuit that can be used to obtain the data needed to plot the graph. Use the correct circuit symbol for each component that you add to the diagram.

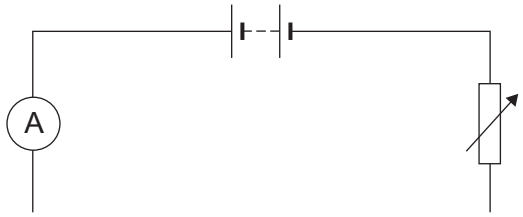

(2 marks)

5 (c) (i) What is the current through the component when the potential difference across the component is 0.8 volts?

Current ..... amps
(1 mark)

5 (c) (ii) Use the equation in the box to calculate the resistance of the component when the potential difference across it is 0.8 volts.

potential difference = current × resistance

Show clearly how you work out your answer.

.....

.....

Resistance = ... Ω
(2 marks)

6

4.2.1.3 Current, resistance and potential difference

Question 41

4 (a) The drawing shows the plug for operating a radio from the mains.

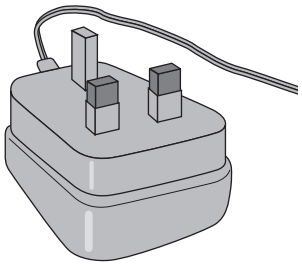

This plug contains a transformer. There are 4600 turns on its primary coil and 200 turns on its secondary coil. The plug is used on the mains supply and has a potential difference (p.d.) of 230 V across its primary coil.

Use the equation in the box to calculate the p.d. across the secondary coil of the transformer.

$$\frac{\text{p.d. across primary}}{\text{p.d. across secondary}} = \frac{\text{number of turns on primary}}{\text{number of turns on secondary}}$$

Show clearly how you work out your answer.

.....

.....

.....

.....

p.d. across secondary = ... V

(2 marks)

4 (b) The coils of the transformer are made of insulated wire.

Why is the wire insulated?

.....

.....

(1 mark)

4.2.1.3 Current, resistance and potential difference

Question 41 · continued

4 (c) (i) What material is the core of a transformer made from?

.....

(1 mark)

4 (c) (ii) Why is the core made from this material?

.....

.....

(1 mark)

5

Turn over for the next question

4.2.1.3 Current, resistance and potential difference

Question 42

January 2011 | PHY3H | Original Q7 | Legacy

7 Jupiter has a magnetic field which is more powerful than the magnetic field of any other planet in the Solar System.

Some scientists have suggested that, in the future, a long metal cable could hang from a satellite which orbits Jupiter. The cable would be part of a complete circuit.
This arrangement would produce electricity for the satellite.

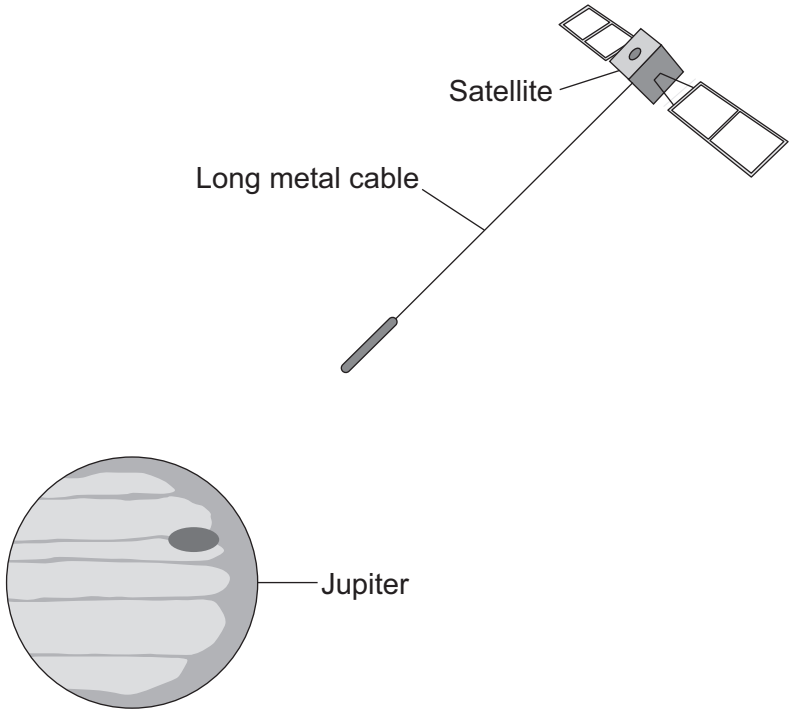

7 (a) (i) What is the name of the effect that would produce electricity for the satellite?

.....

(1 mark)

7 (a) (ii) Describe how a potential difference is produced across the ends of the metal cable.

.....

.....

.....

.....

(2 marks)

4.2.1.3 Current, resistance and potential difference

Question 42 · continued

7 (a) (iii) Why will the potential difference produce an electric current?

.....

.....

(1 mark)

7 (b) Other satellites in the Solar System could use the same effect to produce electricity in a similar way.

Suggest **two** reasons why the potential difference produced for another satellite might be **smaller** than the potential difference for the satellite in the diagram.

1 .....

.....

2 .....

.....

(2 marks)

6

4.2.1.3 Current, resistance and potential difference

Question 43

June 2011 | PHY2H | Original Q1 | Legacy

1 **Diagram 1** shows a hairdryer.
Diagram 2 shows how the heaters and fan of the hairdryer are connected to a 3-pin plug.
The hairdryer does not have an earth wire.

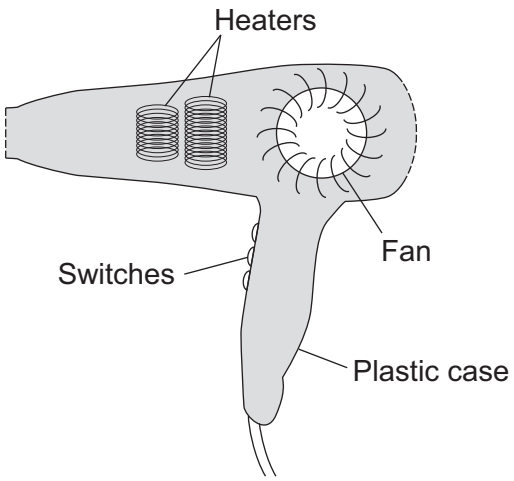

Diagram 1

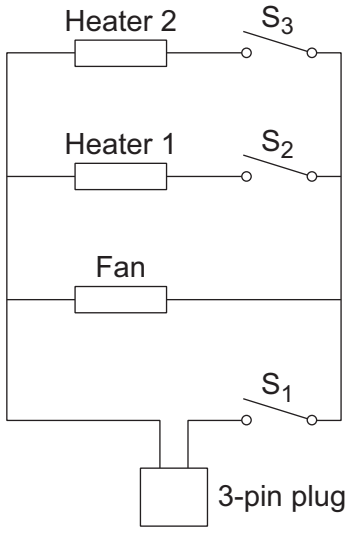

Diagram 2

1 (a) What colour is the insulation around the wire connected to the live pin inside the plug?

.....

(1 mark)

1 (b) Why does the hairdryer **not** need an earth wire?

.....

.....

(1 mark)

1 (c) All the switches are shown in the OFF position.

1 (c) (i) Which switch or switches have to be ON to make:

(1) only the fan work; .....

(2) heater 2 work? .....

(2 marks)

4.2.1.3 Current, resistance and potential difference

Question 43 · continued

1 (c) (ii) The heaters can only be switched on when the fan is also switched on.

Explain why.

.....

.....

.....

.....

.....

(2 marks)

1 (d) The table shows the current drawn from the 230 volt mains electricity supply when different parts of the hairdryer are switched on.

	Current in amps
Fan only	1.0
Fan and heater 1	4.4
Fan and both heaters	6.5

Use the equation in the box to calculate the maximum power of the hairdryer.

power = current × potential difference

Show clearly how you work out your answer and give the unit.

.....

.....

Maximum power = ...

(3 marks)

9

4.2.1.3 Current, resistance and potential difference

Question 44

June 2011 | PHY2H | Original Q6 | Legacy

6 The diagram shows a strain gauge, which is an electrical device used to monitor a changing force.

Applying a force to the gauge causes it to stretch.
This makes the electrical resistance of the wire change.

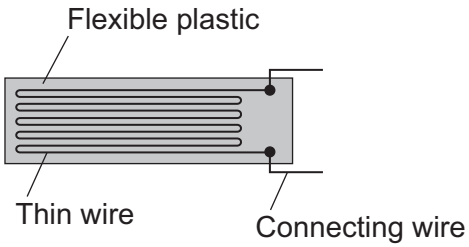

6 (a) (i) Using the correct symbols, **add** to the diagram to show how a battery, an ammeter and a voltmeter can be used to find the resistance of the strain gauge drawn above.

(2 marks)

6 (a) (ii) When in use, the strain gauge is always connected to a d.c. power supply, such as a battery.

How is a d.c. (direct current) power supply different from an a.c. (alternating current) power supply?

.....

.....

.....

(1 mark)

4.2.1.3 Current, resistance and potential difference

Question 44 · continued

6 (b) Before any force is applied, the unstretched gauge, correctly connected to a 3.0 V battery, has a current of 0.040 A flowing through it.

6 (b) (i) Use the equation in the box to calculate the resistance of the unstretched gauge.

potential difference = current × resistance

Show clearly how you work out your answer.

.....

.....

Resistance = ... Ω

(2 marks)

6 (b) (ii) Stretching the gauge causes the current flowing through the gauge to decrease.

What happens to the resistance of the gauge when it is stretched?

.....

.....

(1 mark)

6 (b) (iii) What form of energy is stored in the gauge when a force is applied and the gauge stretches?

.....

(1 mark)

7

4.2.1.3 Current, resistance and potential difference

Question 45

June 2011 | PHY3H | Original Q7 | Legacy

7 (a) In the National Grid, very large step-up transformers link power stations to the transmission cables.

A transformer used for this purpose has 800 turns on its primary coil and 12 800 turns on its secondary coil. The p.d. (potential difference) across its primary coil is 25 kV.

Use the equation in the box to calculate the p.d. across its secondary coil.

$$\frac{\text{p.d. across primary}}{\text{p.d. across secondary}} = \frac{\text{number of turns on primary}}{\text{number of turns on secondary}}$$

Show clearly how you work out your answer **and** give the unit.

.....

.....

p.d. across secondary coil = ...

(3 marks)

7 (b) The primary and secondary coils of a transformer are made of insulated wire.

Why is this insulation necessary?

.....

.....

(1 mark)

7 (c) Describe what happens when an alternating potential difference is applied across the primary coil of a transformer.

.....

.....

.....

.....

.....

.....

(3 marks)

7

4.2.1.3 Current, resistance and potential difference

Question 46

June 2012 | PH2HP | Original Q5 | Legacy

5 The graph shows how the electric current through a 12 V filament bulb varies with the potential difference across the bulb.

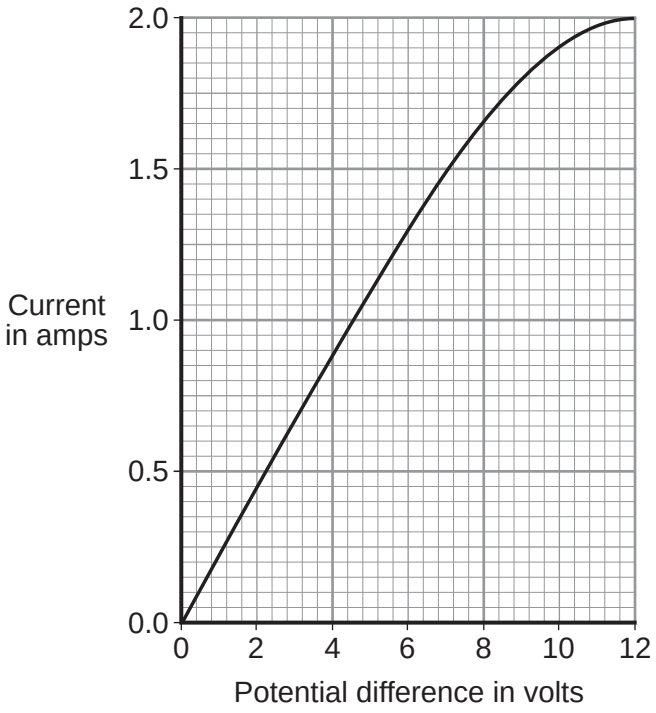

5 (a) What is the meaning of the following terms?

electric current

.....

.....

potential difference

.....

.....

(2 marks)

4.2.1.3 Current, resistance and potential difference

Question 46 · continued

5 (b) The resistance of the metal filament inside the bulb increases as the potential difference across the bulb increases.

Explain why.

.....

.....

.....

.....

.....

.....

.....

.....

(3 marks)

5 (c) Use data from the graph to calculate the rate at which the filament bulb transfers energy, when the potential difference across the bulb is 6 V.

Use the correct equation from the Physics Equations Sheet.

Show clearly how you work out your answer.

.....

.....

Rate of energy transfer = ... W

(2 marks)

7

4.2.1.3 Current, resistance and potential difference

Question 47

June 2012 | PH2HP | Original Q7 | Legacy

7 (a) The picture shows a person using a set of electronic 'Body Fat Scales'. When the person stands on the scales, a small, harmless, electric current passes through the person's body. The scales then calculate the resistance of the person's body and convert the resistance into a *prediction* of body fat content.

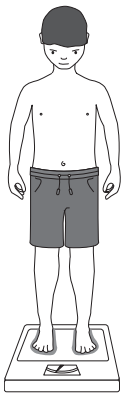

7 (a) (i) The scales contain two 3 V cells joined in series.

Calculate the resistance of a person's body, if when he stands on the scales, a current of 0.12 mA passes through his body.

1000 mA = 1 A

Use the correct equation from the Physics Equations Sheet.

Show clearly how you work out your answer and give the unit.

.....

.....

.....

Resistance = ...

(3 marks)

Question 47 · continued

7 (a) (ii) The scales can only produce a *prediction* of body fat content and not an accurate measurement.

Suggest why.

.....

.....

.....

(1 mark)

7 (a) (iii) It is recommended that the scales are **not** used immediately after a person has drunk a large amount of water.

Suggest why.

.....

.....

.....

.....

.....

(2 marks)

Question 7 continues on the next page

4.2.1.3 Current, resistance and potential difference

Question 47 · continued

7 (b) The diagram shows how someone could get an electric shock from accidentally cutting into an electric cable. If this happens, and a Residual Current Circuit Breaker (RCCB) is being used, the circuit will switch off automatically.

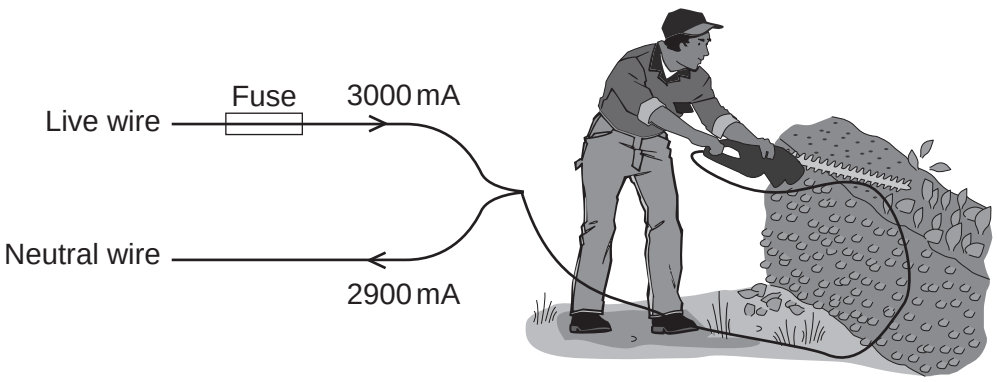

7 (b) (i) A faulty appliance or circuit can be switched off by a RCCB or a fuse.

Compare the action of a RCCB with the action of a fuse.

.....

.....

.....

.....

.....

(2 marks)

4.2.1.3 Current, resistance and potential difference

Question 47 · continued

7 (b) (ii) The graph shows how the severity of an electric shock depends on the size of the current and the time that the current flows through the body.

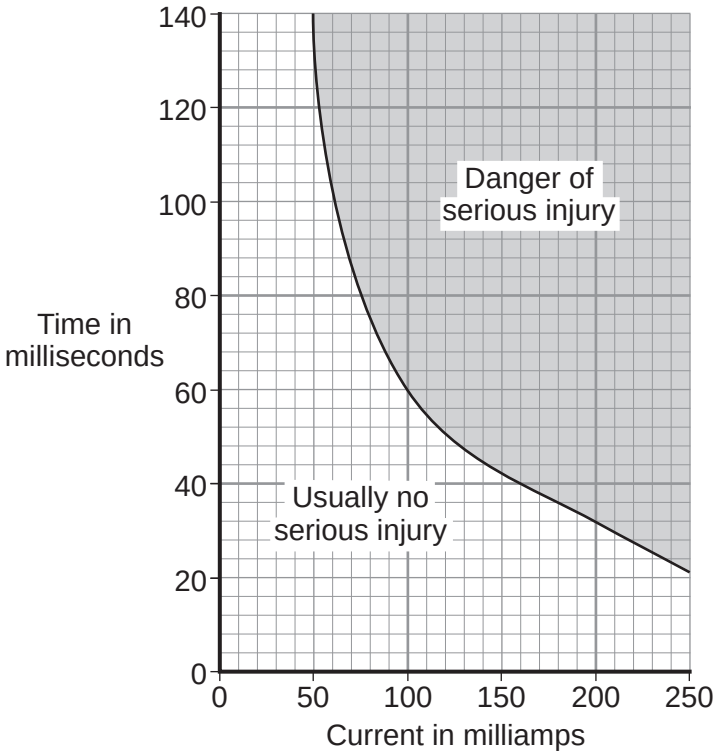

Using the RCCB helps prevent an electric shock seriously injuring the person using the hedge trimmers.

Using information from both the diagram and the graph explain how.

.....

.....

.....

.....

.....

(2 marks)

10

4.2.1.3 Current, resistance and potential difference

Question 48

January 2013 | PH2HP | Original Q4 | Legacy

4 (a) A student set up the circuit shown in the diagram. The student uses the circuit to obtain the data needed to plot a current - potential difference graph for a diode.

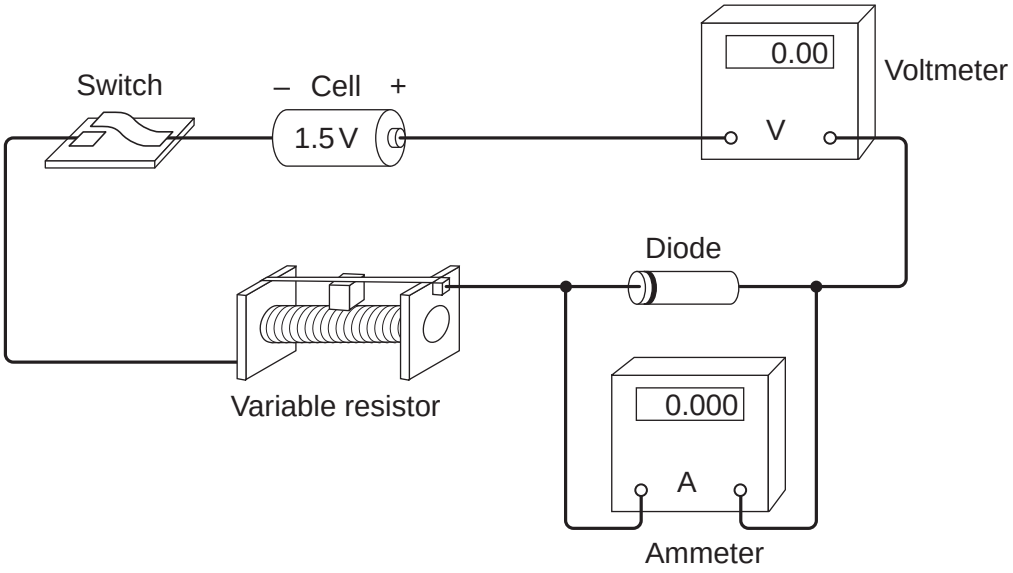

4 (a) (i) Draw, in the boxes, the circuit symbol for a diode and the circuit symbol for a variable resistor.

Diode	**Variable resistor**

(2 marks)

4 (a) (ii) The student made two mistakes when setting up the circuit.

What **two** mistakes did the student make?

1 .....

.....

2 .....

.....

(2 marks)

4.2.1.3 Current, resistance and potential difference

Question 48 · continued

4 (b) After correcting the circuit, the student obtained a set of data and plotted the graph below.

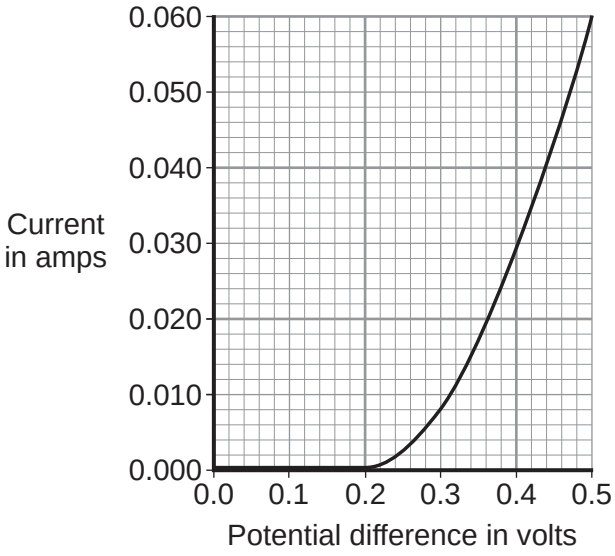

4 (b) (i) At what potential difference did the diode start to conduct an electric current?

..... V
(1 mark)

4 (b) (ii) Use data from the graph to calculate the resistance of the diode when the potential difference across the diode is 0.3 V.

Use the correct equation from the Physics Equations Sheet.

.....

.....

.....

Resistance = ... ohms
(3 marks)

Question 4 continues on the next page

4.2.1.3 Current, resistance and potential difference

Question 48 · continued

4 (c) The diagram shows the trace produced by an alternating current (a.c.) supply on an oscilloscope.

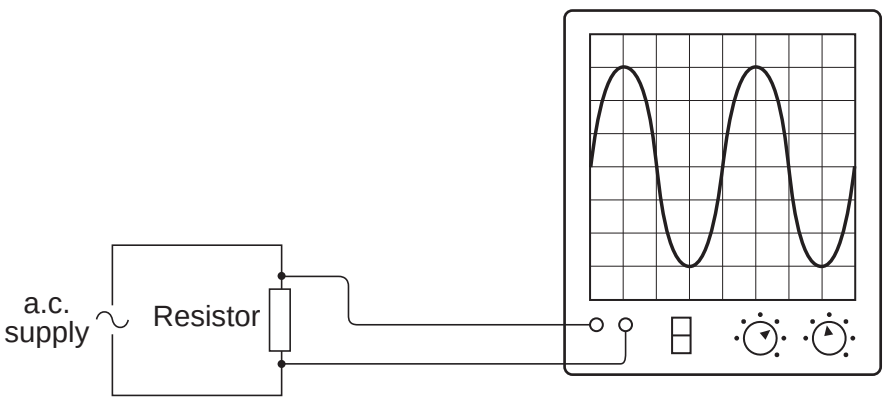

Each horizontal division on the oscilloscope screen represents a time of 0.01s.

4 (c) (i) Calculate the frequency of the a.c. supply.

.....

.....

.....

Frequency = ... hertz
(2 marks)

4.2.1.3 Current, resistance and potential difference

Question 48 · continued

4 (c) (ii) A diode is now connected in series with the a.c. power supply.

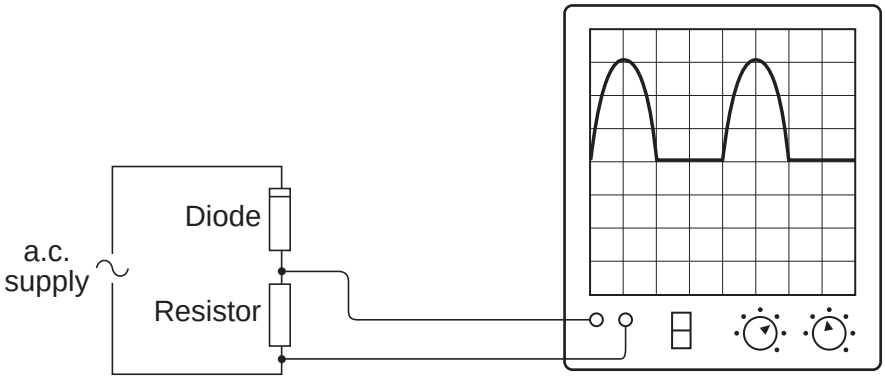

Why does the diode cause the trace on the oscilloscope screen to change?

.....

.....

.....

.....

(2 marks)

12

4.2.1.3 Current, resistance and potential difference

Question 49

June 2013 | PH2HP | Original Q2 | Legacy

2 (a) The diagram shows the circuit used to obtain the data needed to plot the current–potential difference graph for a filament bulb.

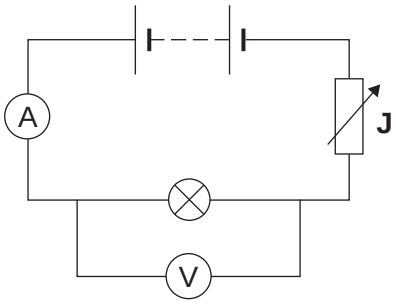

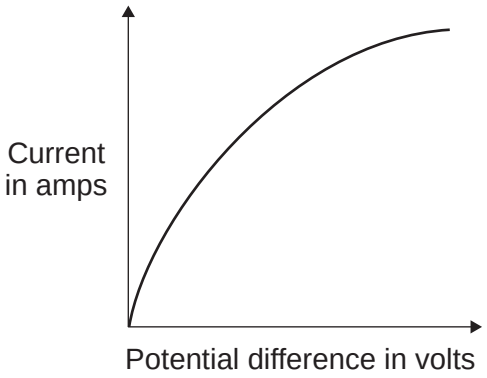

2 (a) (i) Why is the component labelled '**J**' included in the circuit?

.....

.....

(1 mark)

2 (a) (ii) The resistance of the bulb increases as the potential difference across the bulb increases. Why?

.....

.....

(1 mark)

2 (a) (iii) The bulb is at full brightness when the potential difference across the bulb is 12 V. The current through the bulb is then 3 A.

Calculate the power of the bulb when it is at full brightness and give the unit.

Use the correct equation from the Physics Equations Sheet.

.....

.....

.....

Power = ...

(3 marks)

4.2.1.3 Current, resistance and potential difference

Question 49 · continued

2 (b) *In this question you will be assessed on using good English, organising information clearly and using specialist terms where appropriate.*

The table gives data about two types of light bulb people may use in their homes.

Type of light bulb	Energy efficiency	Cost of one light bulb	Average lifetime in hours
Halogen	10%	£1.95	2 000
Light Emitting Diode (LED)	32%	£11.70	36 000

Both types of light bulb produce the same amount of light.

Evaluate, in terms of cost and energy efficiency, the use of the two types of light bulb.

To gain full marks you must compare both types of light bulb and conclude which light bulb would be the best to use.

.....

.....

.....

.....

.....

.....

.....

.....

.....

.....

.....

.....

.....

.....

.....

(6 marks)

11

4.2.1.3 Current, resistance and potential difference

Question 50

June 2013 | PH2HP | Original Q6 | Legacy

6 The picture shows an electric cooker hob. The simplified circuit diagram shows how the four heating elements connect to the mains electricity supply. The heating elements are identical.

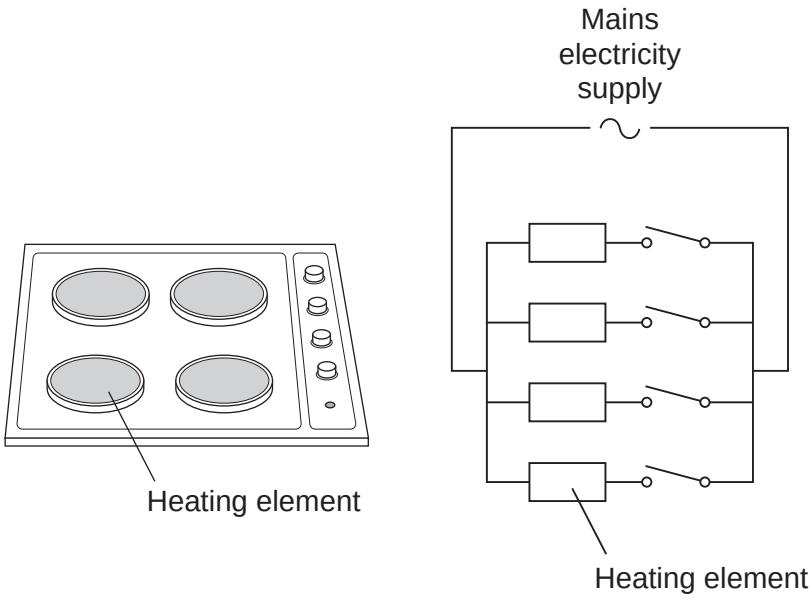

When all four heating elements are switched on at full power the hob draws a current of 26 A from the 230 V mains electricity supply.

6 (a) Calculate the resistance of one heating element when the hob is switched on at full power.

Use the correct equation from the Physics Equations Sheet.

Give your answer to 2 significant figures.

.....

.....

.....

Resistance = ... Ω

(3 marks)

Question 6 continues on the next page

4.2.1.3 Current, resistance and potential difference

Question 50 · continued

6 (b) The table gives the maximum current that can safely pass through copper wires of different cross-sectional area.

Cross-sectional area in mm^2	Maximum safe current in amps
1.0	11.5
2.5	20.0
4.0	27.0
6.0	34.0

6 (b) (i) The power sockets in a home are wired to the mains electricity supply using cables containing 2.5 mm^2 copper wires. Most electrical appliances are connected to the mains electricity supply by plugging them into a standard power socket.

It would **not** be safe to connect the electric cooker hob to the mains electricity supply by plugging it into a standard power socket.

Why?

.....

.....

.....

.....

(2 marks)

6 (b) (ii) Describe the structure of the cable that should be used to connect the electric cooker hob to the mains electricity supply.

.....

.....

.....

.....

.....

.....

.....

.....

(3 marks)

4.2.1.3 Current, resistance and potential difference

Question 50 · continued

6 (c) Mains electricity is an alternating current supply. Batteries supply a direct current.

What is the difference between an alternating current and a direct current?

.....

.....

.....

.....

(2 marks)

10

4.2.1.3 Current, resistance and potential difference

Question 51

7 Batteries inside laptop computers are charged using laptop chargers. The laptop charger contains a traditional transformer.

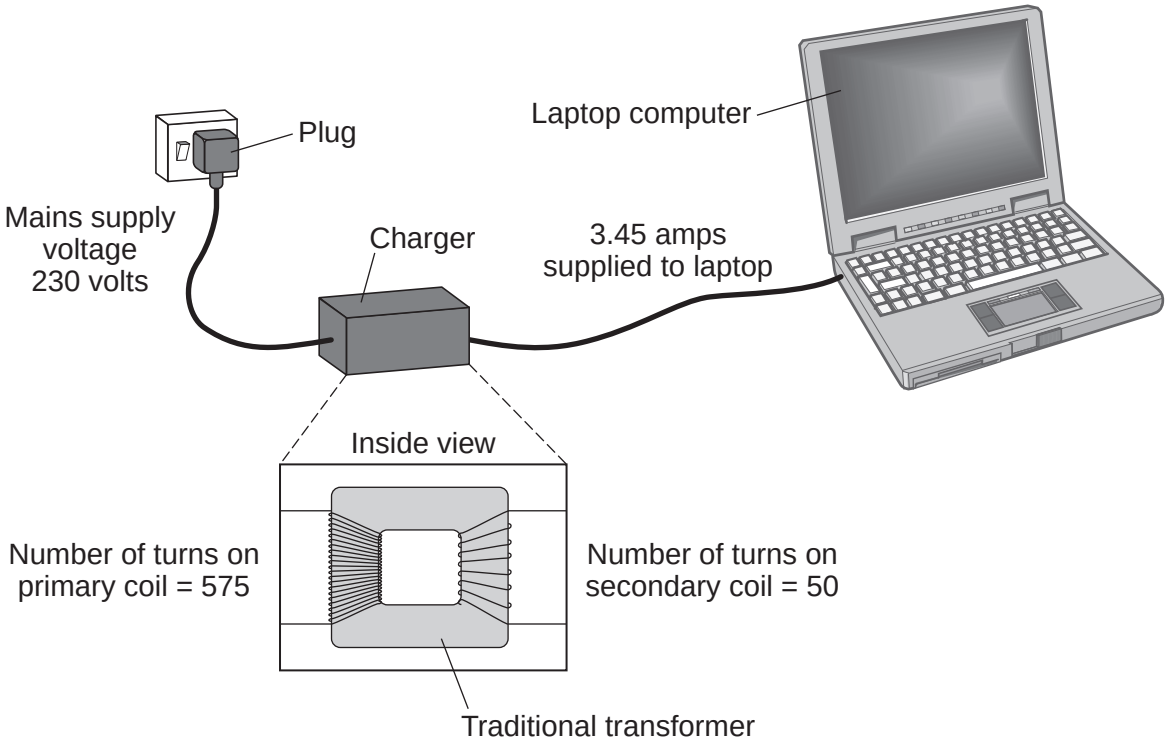

7 (a) The alternating current flowing through the primary coil of the transformer creates an alternating current in the secondary coil.

Explain how.

.....

.....

.....

.....

.....

.....

.....

.....

(3 marks)

4.2.1.3 Current, resistance and potential difference

Question 51 · continued

7 (b) (i) Use information from the diagram to calculate the potential difference the charger supplies to the laptop.

Use the correct equation from the Physics Equations Sheet.

.....

.....

.....

.....

Potential difference = ... V

(2 marks)

7 (b) (ii) Calculate the current in the primary coil of the transformer when the laptop is being charged.

Assume the transformer is 100% efficient.

Use the correct equation from the Physics Equations Sheet.

.....

.....

.....

.....

Current = ... A

(2 marks)

Question 7 continues on the next page

4.2.1.3 Current, resistance and potential difference

Question 51 · continued

7 (c) Switch mode transformers can be used in mobile phone chargers.

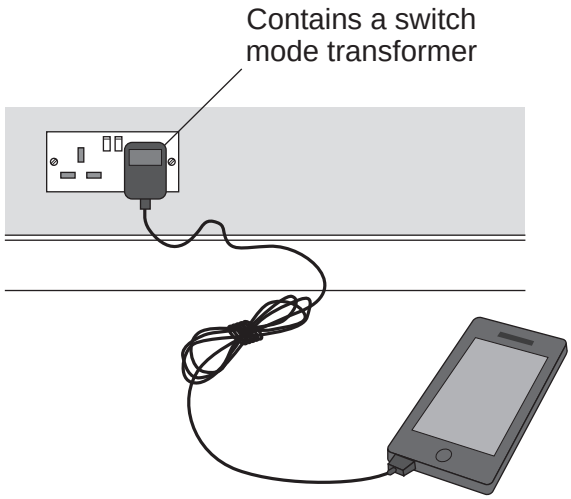

Switch mode transformers and traditional transformers can both use the UK mains supply.

The switch mode transformer is smaller and lighter than the traditional transformer used in the laptop charger.

Give **one** other advantage of the switch mode transformer.

.....

.....

(1 mark)

7 (d) Laptop batteries and mobile phone batteries can only be recharged a limited number of times. After this, the batteries cannot store enough charge to be useful. Scientists are developing new batteries that can be recharged many more times than existing batteries.

Suggest **one** other advantage of developing these new batteries.

.....

.....

.....

(1 mark)

9

4.2.1.3 Current, resistance and potential difference

Question 52

June 2014 | PH2HP | Original Q4 | Legacy

4 (a) **Figure 4** shows the apparatus used to obtain the data needed to calculate the resistance of a thermistor at different temperatures.

Figure 4

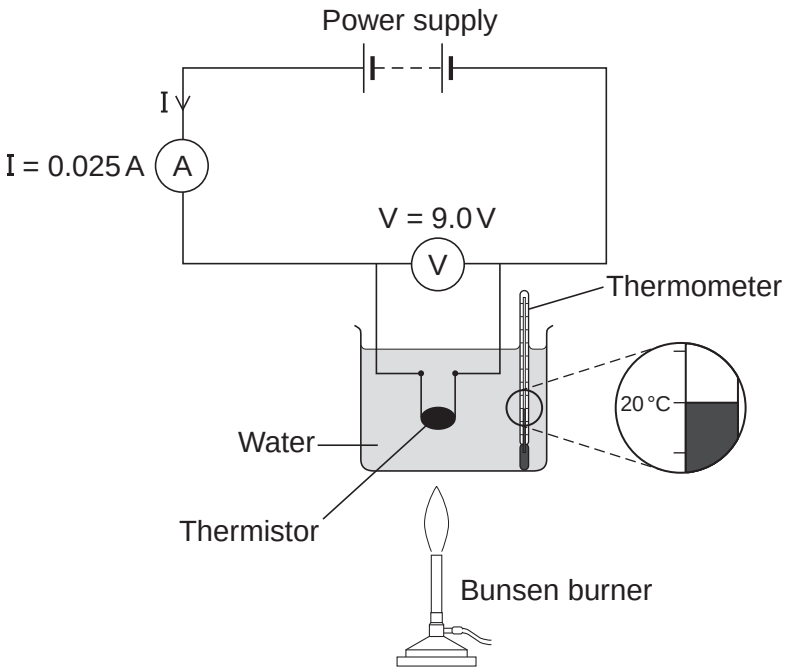

4 (a) (i) In the box below, draw the circuit symbol for a thermistor.

[1 mark]

4 (a) (ii) Use the data given in **Figure 4** to calculate the resistance of the thermistor at 20 °C.

Use the correct equation from the Physics Equations Sheet.

[2 marks]

.....

.....

.....

Resistance = ... ohms

Question 4 continues on the next page

4.2.1.3 Current, resistance and potential difference

Question 52 · continued

4 (a) (iii) **Figure 5** shows the axes for a sketch graph.

Complete **Figure 5** to show how the resistance of the thermistor will change as the temperature of the thermistor increases from 20 °C to 100 °C.

[1 mark]

Figure 5

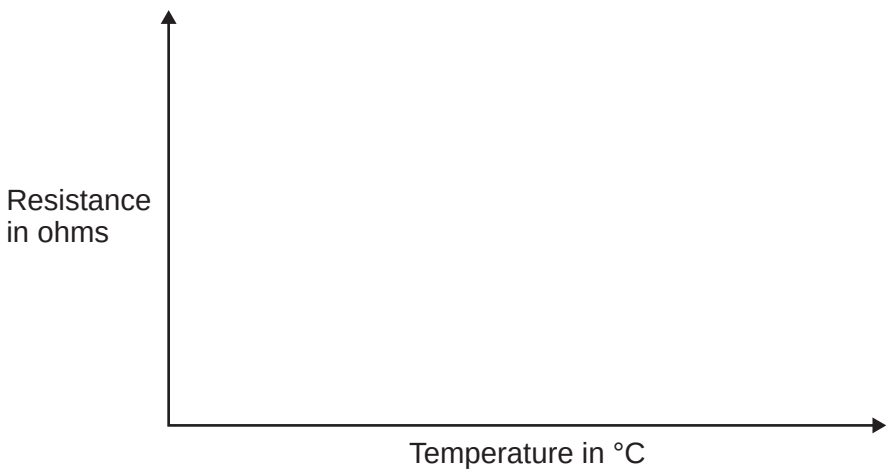

4 (a) (iv) Which **one** of the following is most likely to include a thermistor?

Tick (✓) **one** box.

[1 mark]

An automatic circuit to switch a plant watering system on and off. ☐

An automatic circuit to switch an outside light on when it gets dark. ☐

An automatic circuit to switch a heating system on and off. ☐

4 (b) The ammeter used in the circuit has a very low resistance.

Why is it important that ammeters have a very low resistance?

[1 mark]

.....

.....

4.2.1.3 Current, resistance and potential difference

Question 52 · continued

4 (c) **Table 2** gives the temperature of boiling water using three different temperature scales.

Table 2

Temperature	Scale
100	Celsius (°C)
212	Fahrenheit (°F)
80	Réaumur (°Re)

Scientists in different countries use the same temperature scale to measure temperature.

Suggest **one** advantage of doing this.

[1 mark]

.....

.....

.....

4 (d) A student plans to investigate how the resistance of a light-dependent resistor (LDR) changes with light intensity.

The student starts with the apparatus shown in **Figure 4** but makes three changes to the apparatus.

One of the changes the student makes is to replace the thermistor with an LDR.

Describe what other changes the student should make to the apparatus.

[2 marks]

.....

.....

.....

.....

9

4.2.1.3 Current, resistance and potential difference

Question 53

June 2014 | PH3HP | Original Q3 | Legacy

3 (a) **In this question you will be assessed on using good English, organising information clearly and using specialist terms where appropriate.**

There are two types of traditional transformer; step-up and step-down.

Describe the similarities and differences between a step-up transformer and a step-down transformer.

You should include details of:

- construction, including materials used
- the effect the transformer has on the input potential difference (p.d.).

You should **not** draw a diagram.

[6 marks]

.....

.....

.....

.....

.....

.....

.....

.....

.....

.....

.....

.....

Extra space .....

.....

.....

.....

.....

.....

Question 3 continues on the next page

4.2.1.3 Current, resistance and potential difference

Question 53 · continued

3 (b) **Figure 4** shows a mobile phone and charger.

Figure 4

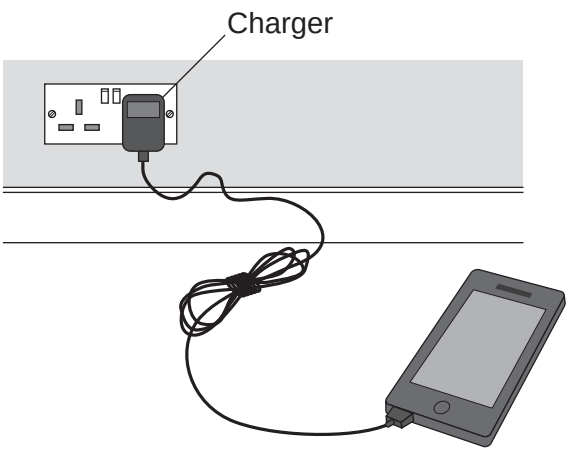

Mobile phone chargers use a different type of transformer, which is smaller and lighter than a traditional transformer.

What name is given to the type of transformer used in a mobile phone charger?

[1 mark]

.....

7

4.2.1.3 Current, resistance and potential difference

Question 54

June 2015 | PH2HP | Original Q1 | Legacy

1 (a) **Figure 1** shows the current–potential difference graph for three wires, **A**, **B** and **C**.

Figure 1

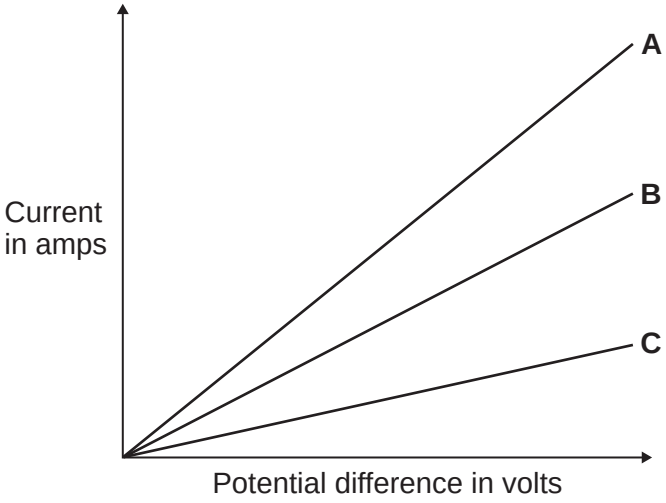

1 (a) (i) Using **Figure 1**, how can you tell that the temperature of each wire is constant?

[1 mark]

.....

.....

1 (a) (ii) Which **one** of the wires, **A**, **B** or **C**, has the greatest resistance?

[2 marks]

Write the correct answer in the box. ☐

Give a reason for your answer.

.....

.....

.....

Question 54 · continued

1 (b) A student measured the resistance of four wires.

Table 1 shows the resistance of, and other data about, each of the four wires, **J**, **K**, **L** and **M**.

Table 1

Wire	Type of metal	Length in cm	Diameter in mm	Resistance in .....
J	copper	50	0.17	0.36
K	copper	50	0.30	0.12
L	copper	100	0.30	0.24
M	constantan	100	0.30	7.00

1 (b) (i) The last column of **Table 1** should include the unit of resistance.

[1 mark]

What is the unit of resistance?

.....

1 (b) (ii) The resistance of a wire depends on many factors.

Look at **Table 1**. Which **two** wires from **J**, **K**, **L** and **M** show that the resistance of a wire depends on the **length** of the wire?

[2 marks]

Wire ☐ and wire ☐

Give a reason for your answer.

.....

.....

.....

Question 1 continues on the next page

4.2.1.3 Current, resistance and potential difference

Question 54 · continued

1 (b) (iii) A student looked at the data in **Table 1** and wrote this conclusion:

'The resistance of a wire depends on the type of metal from which the wire is made.'

The student could **not** be certain that her conclusion is true for **all** types of metal.

Suggest what extra data is needed for the student to be more certain that the conclusion is correct.

[1 mark]

.....

.....

.....

1 (c) The resistance of a wire can be calculated using the readings from an ammeter and a voltmeter.

1 (c) (i) Complete **Figure 2** by drawing a voltmeter in the correct position in the circuit. Use the correct circuit symbol for a voltmeter.

[1 mark]

Figure 2

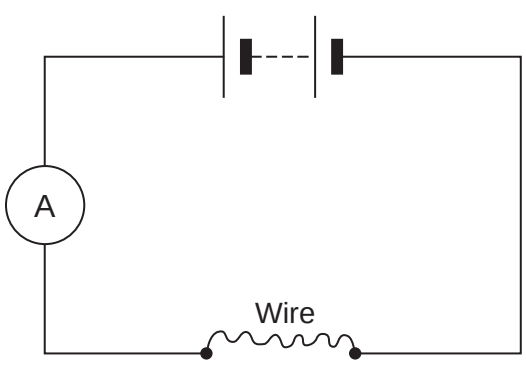

4.2.1.3 Current, resistance and potential difference

Question 54 · continued

1 (c) (ii) In a circuit diagram, a wire can be represented by the symbol for a resistor.

In the box below, draw the circuit symbol for a resistor.

[1 mark]

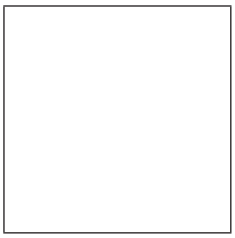

9

Turn over for the next question

4.2.1.3 Current, resistance and potential difference

Question 55

June 2015 | PH2HP | Original Q5 | Legacy

5 A 12 V filament bulb is connected to a 12 V power supply.
Figure 6 shows how the current changes after the bulb is switched on.

Figure 6

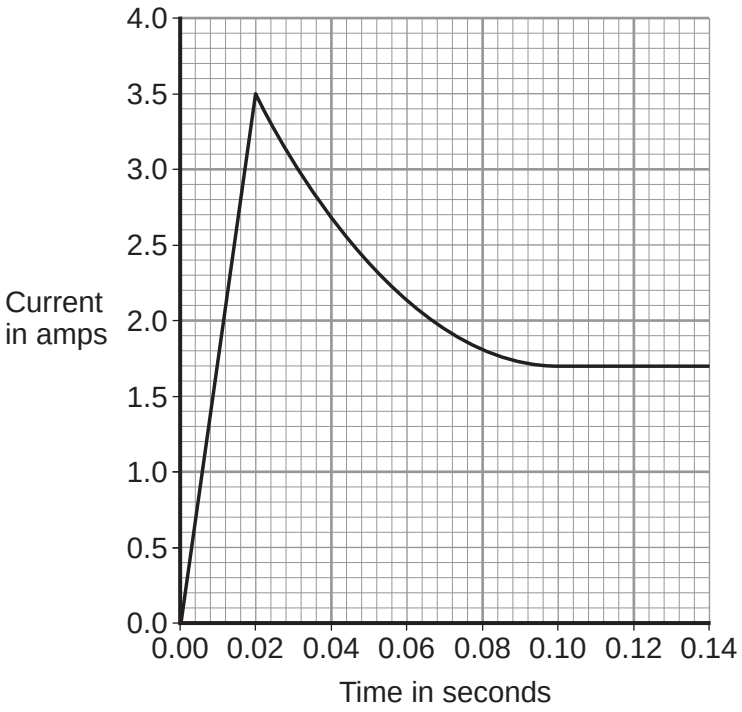

5 (a) (i) After 0.10 seconds, the bulb works at its normal brightness.

What is the current through the bulb when it is working at normal brightness?

[1 mark]

Current = ... A

5 (a) (ii) The bulb works at normal brightness for 30 seconds before it is switched off.

Calculate the charge that flows through the bulb in the 30 seconds before it is switched off. Give the unit.

Use the correct equation from the Physics Equations Sheet.

[3 marks]

.....

.....

.....

Charge = ... unit .....

4.2.1.3 Current, resistance and potential difference

Question 55 · continued

5 (a) (iii) Calculate the energy transferred by the 12 V bulb when it is working at normal brightness for 30 seconds.

Use the correct equation from the Physics Equations Sheet.

[2 marks]

.....

.....

Energy transferred = ... J

5 (b) Between 0.02 seconds and 0.08 seconds, there is an increase in both the resistance and the temperature of the metal filament inside the bulb.

Explain, in terms of the electrons and ions inside the filament, why both the temperature and the resistance increase.

[2 marks]

.....

.....

.....

.....

.....

.....

8

4.2.1.3 Current, resistance and potential difference

Question 56

June 2015 | PH3HP | Original Q8 | Legacy

8 An electric toothbrush is charged by standing it on a separate charging base. **Figure 15** shows the inside of the electric toothbrush and the charging base.

Figure 15

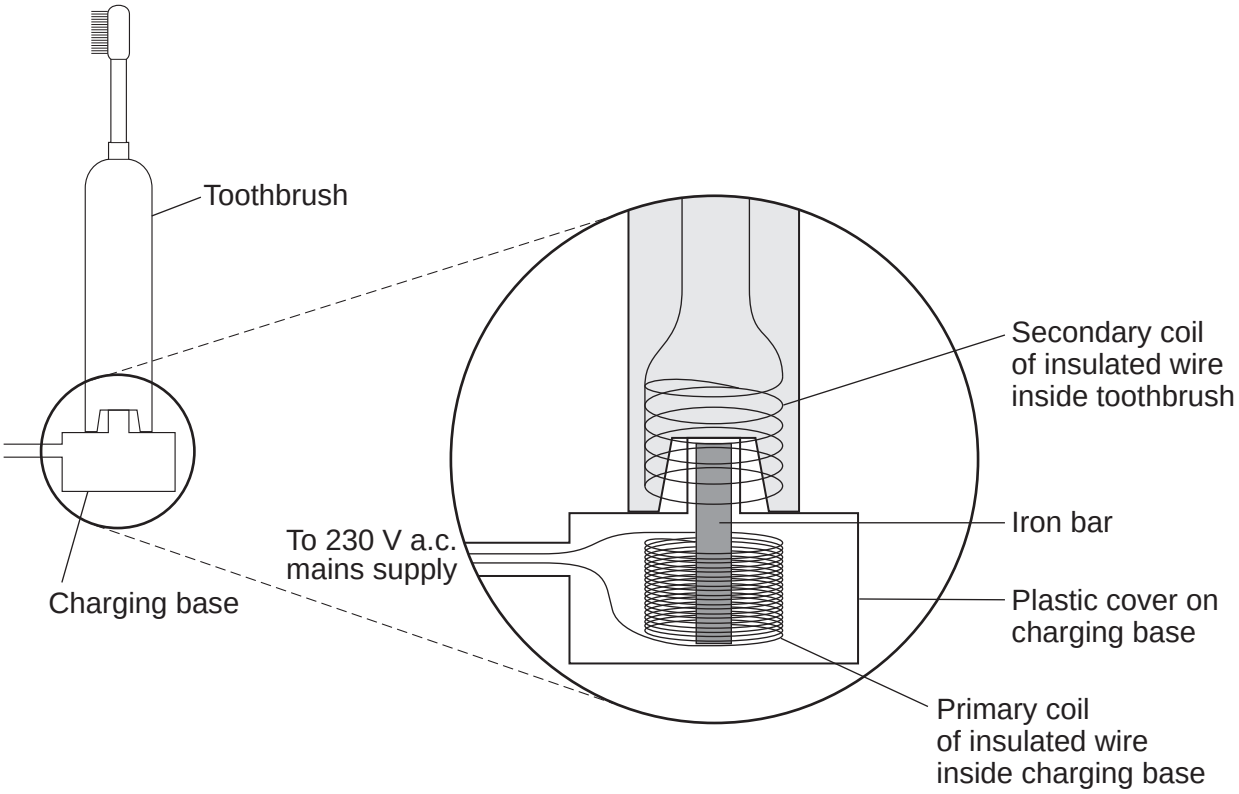

8 (a) An alternating potential difference (p.d.) across the coil in the charging base creates an alternating current in the coil inside the toothbrush.

Explain how.

[3 marks]

.....

.....

.....

.....

.....

.....

.....

.....

Question 56 · continued

8 (b) When the toothbrush is being charged, the p.d. across the primary coil in the charging base is 230 V.

The charging p.d. across the secondary coil in the toothbrush is 7.2 V.

The primary coil in the charging base has 575 turns of wire on its coil.

Calculate the number of turns on the secondary coil inside the toothbrush.

Use the correct equation from the Physics Equations Sheet.

[2 marks]

.....

.....

.....

.....

Number of turns on the secondary coil = ...

5

4.2.1.3 Current, resistance and potential difference

Question 57

June 2016 | PH2HP | Original Q3 | Legacy

3 (a) **Figure 5** shows the inside of a battery pack designed to hold three identical 1.5 V cells.

Figure 5

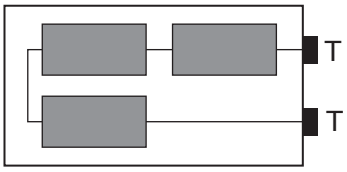

Which **one** of the arrangements shown in **Figure 6** would give a 4.5 V output across the battery pack terminals **T**?

[1 mark]

Tick (✓) **one** box.

Figure 6

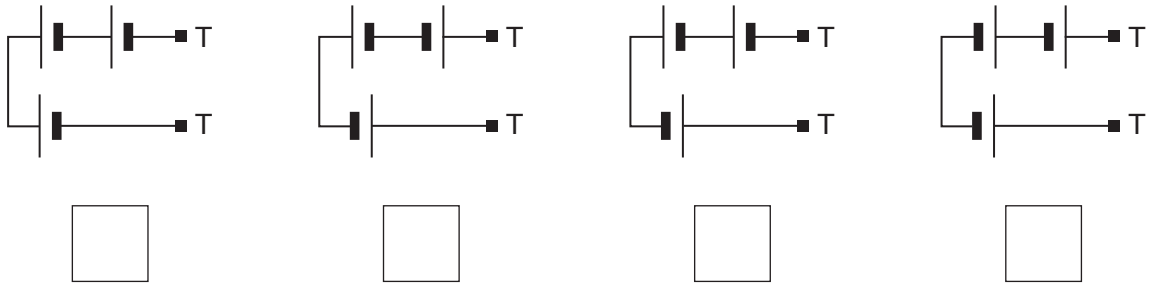

4.2.1.3 Current, resistance and potential difference

Question 57 · continued

3 (b) **Figure 7** shows a variable resistor and a fixed value resistor connected in series in a circuit.

Figure 7

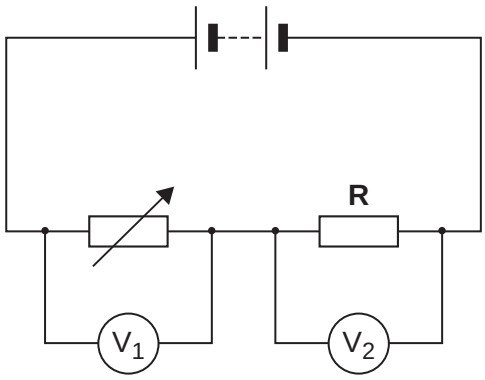

Complete **Figure 7** to show how an ammeter would be connected to measure the current through the circuit.
Use the correct circuit symbol for an ammeter.

[1 mark]

Question 3 continues on the next page

Question 57 · continued

3 (c) The variable resistor can be adjusted to have any value from 200 ohms to 600 ohms.

Figure 8 shows how the reading on voltmeter $\mathbf{V_1}$ and the reading on voltmeter $\mathbf{V_2}$ change as the resistance of the variable resistor changes.

Figure 8

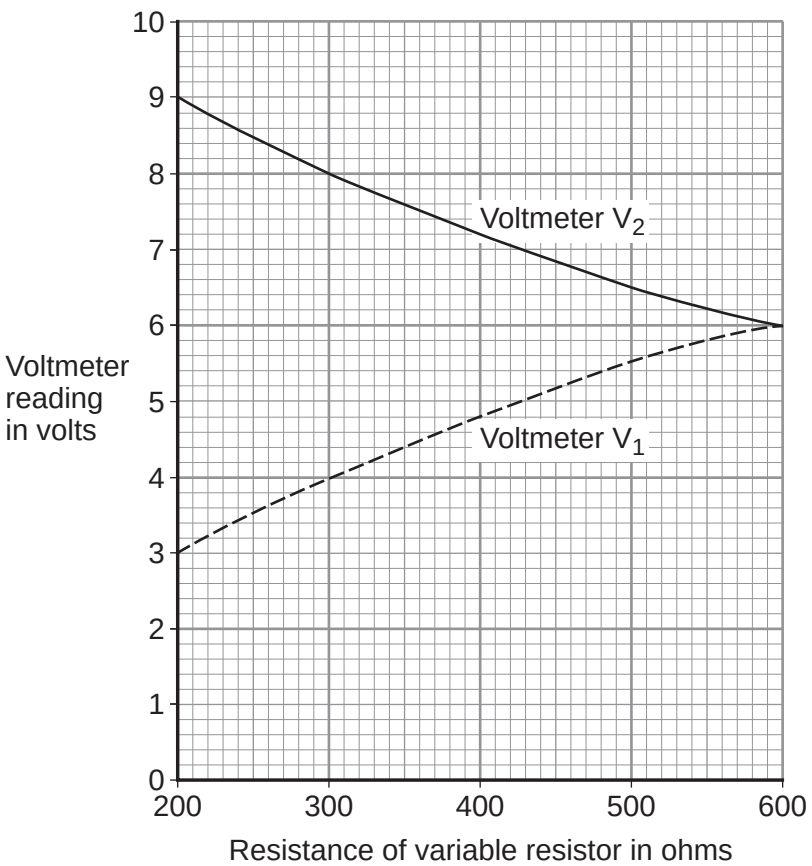

3 (c) (i) How could the potential difference of the battery be calculated from **Figure 8**?

[2 marks]

Tick (✓) **one** box.

9 + 3 = 12 V ☐

9 – 3 = 6 V ☐

9 ÷ 3 = 3 V ☐

Give the reason for your answer.

_____

_____

4.2.1.3 Current, resistance and potential difference

Question 57 · continued

3 (c) (ii) Use **Figure 8** to determine the resistance of the fixed resistor, **R**.

[2 marks]

Resistance of **R** = _____ Ω

Give the reason for your answer.

_____

_____

3 (c) (iii) Calculate the current through the circuit when the resistance of the variable resistor equals 200 Ω.

Use the correct equation from the Physics Equations Sheet.

[3 marks]

_____

_____

_____

Current = _____ A

9

4.2.1.3 Current, resistance and potential difference

Question 58

June 2016 | PH2HP | Original Q4 | Legacy

4 (a) A washing machine is connected to the mains electricity supply using a cable and three-pin plug.
Figure 9 shows a three-pin plug.

Figure 9

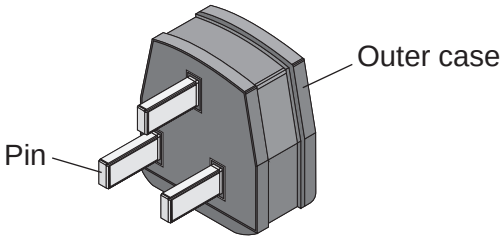

Name the materials used in the structure of a plug. Give the reason why each material is used.

[2 marks]

Pin _____

_____

Outer case _____

_____

4 (b) The three-pin plug contains a fuse. The fuse is connected to one of the wires inside the cable.

4 (b) (i) Which **one** of the wires inside the cable is the fuse connected to?

[1 mark]

_____

4 (b) (ii) The fuse is a thin wire inside a closed glass tube. The wire acts as a resistor.

What effect does a current through a wire have on the wire?

[1 mark]

_____

4.2.1.3 Current, resistance and potential difference

Question 58 · continued

4 (b) (iii) The power of the washing machine varies between 0.7 kW and 2 kW depending on which part of the wash cycle is operating.

Calculate the maximum current drawn from the mains electricity supply by the washing machine.

The mains electricity supply is at a potential difference of 230 V.

Use the correct equation from the Physics Equations Sheet.

[2 marks]

Current = _____ A

Question 4 continues on the next page

Question 58 · continued

4 (c) **Figure 10** shows how the mains electricity cable is connected to the washing machine.
The earth wire is connected to the metal case of the washing machine.

Figure 10

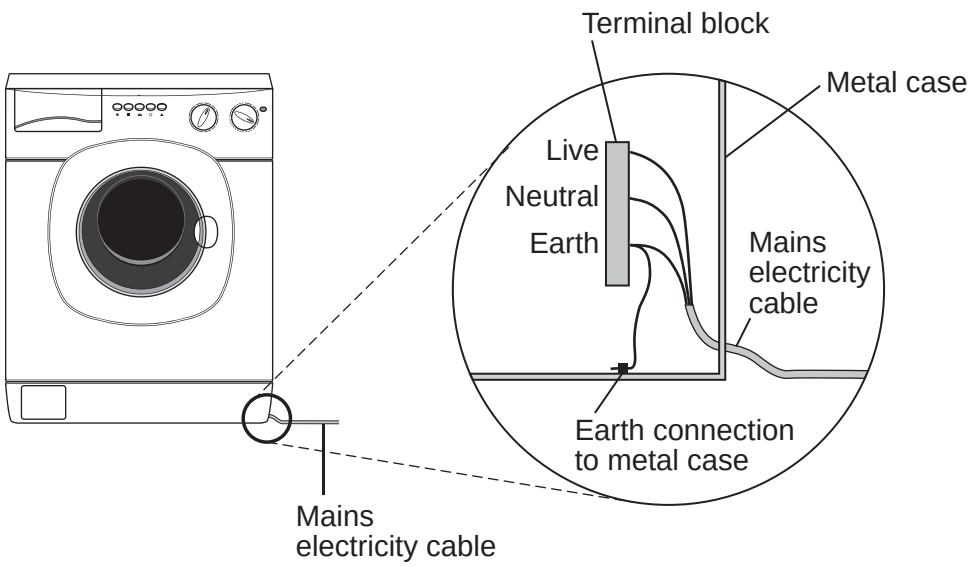

If a fault makes the metal case live, the earth wire and fuse inside the plug prevent the mains cable from overheating and causing a fire.

Explain how.

[2 marks]

4 (d) New research has shown that many people underestimate the hazards of using mains electricity.

It is important that people do understand the hazards of using mains electricity.
Suggest why.

[1 mark]

9

4.2.1.3 Current, resistance and potential difference

Question 59

June 2016 | PH3HP | Original Q2 | Legacy

2 **Figure 2** shows the structure of a traditional transformer.

Figure 2

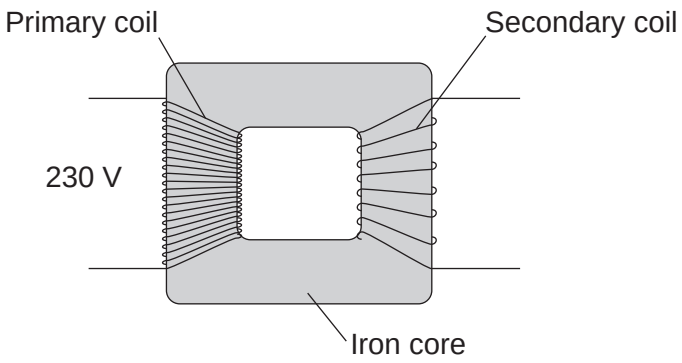

2 (a) There is an alternating current in the primary coil of the transformer.

State what is produced in the iron core.

[2 marks]

_____

_____

2 (b) A transformer has only **one** turn of wire on the secondary coil.
The potential difference across the secondary coil is 11.5 V
The potential difference across the primary coil is 230 V

Calculate the number of turns on the primary coil.

Use the correct equation from the Physics Equations Sheet.

[2 marks]

_____

_____

_____

_____

Number of turns on the primary coil = _____

Question 2 continues on the next page

Question 59 · continued

2 (c) In most transformers, the power output is less than the power input.

State why.

[1 mark]

2 (d) Two students investigated how magnets can be used to produce a potential difference. The students held a coil of wire above a magnet. The students quickly lowered the coil so that the magnet was inside the coil, as shown in **Figure 3**.

Figure 3

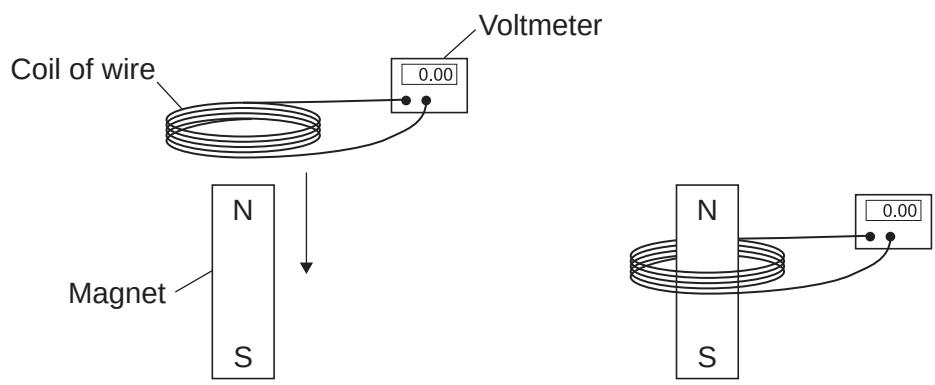

The students recorded the maximum potential difference for coils with different numbers of turns of wire. The results are shown in **Table 1**.

Table 1

Number of turns of wire in the coil	Maximum potential difference in volts	
	Results from student 1	Results from student 2
5	0.09	0.08
10	0.20	0.15
15	0.31	0.25
20	0.39	0.33
25	0.51	0.39

4.2.1.3 Current, resistance and potential difference

Question 59 · continued

2 (d) (i) State the resolution of the voltmeter.

Give **one** reason why the resolution of the voltmeter is suitable for this investigation.

[2 marks]

Resolution _____

Reason _____

_____

2 (d) (ii) The two students used exactly the same equipment to carry out their investigations. Both students recorded their results correctly.

Give the reason why student 2 got different results from student 1.

[1 mark]

_____

_____

2 (d) (iii) The students decided that even though the results were different, there was no need to repeat the investigation.

How do the results show that the investigation is reproducible?

[1 mark]

_____

_____

2 (d) (iv) State the name of the process which causes the potential difference to be produced in this investigation.

[1 mark]

_____

2 (e) A transformer has been developed that can be used with many different devices.

Suggest **one** advantage of having a transformer that can be used with many different devices.

[1 mark]

_____

_____

11

4.2.1.3 Current, resistance and potential difference

Question 60

June 2017 | PH2HP | Original Q5 | Legacy

5 The lighting in a home may be provided by LED bulbs, filament bulbs or halogen bulbs.

5 (a) (i) In the box below, draw the circuit symbol for an LED.

[1 mark]

5 (a) (ii) **Figure 6** shows how the power output from one type of LED varies with the potential difference across the LED.

Figure 6

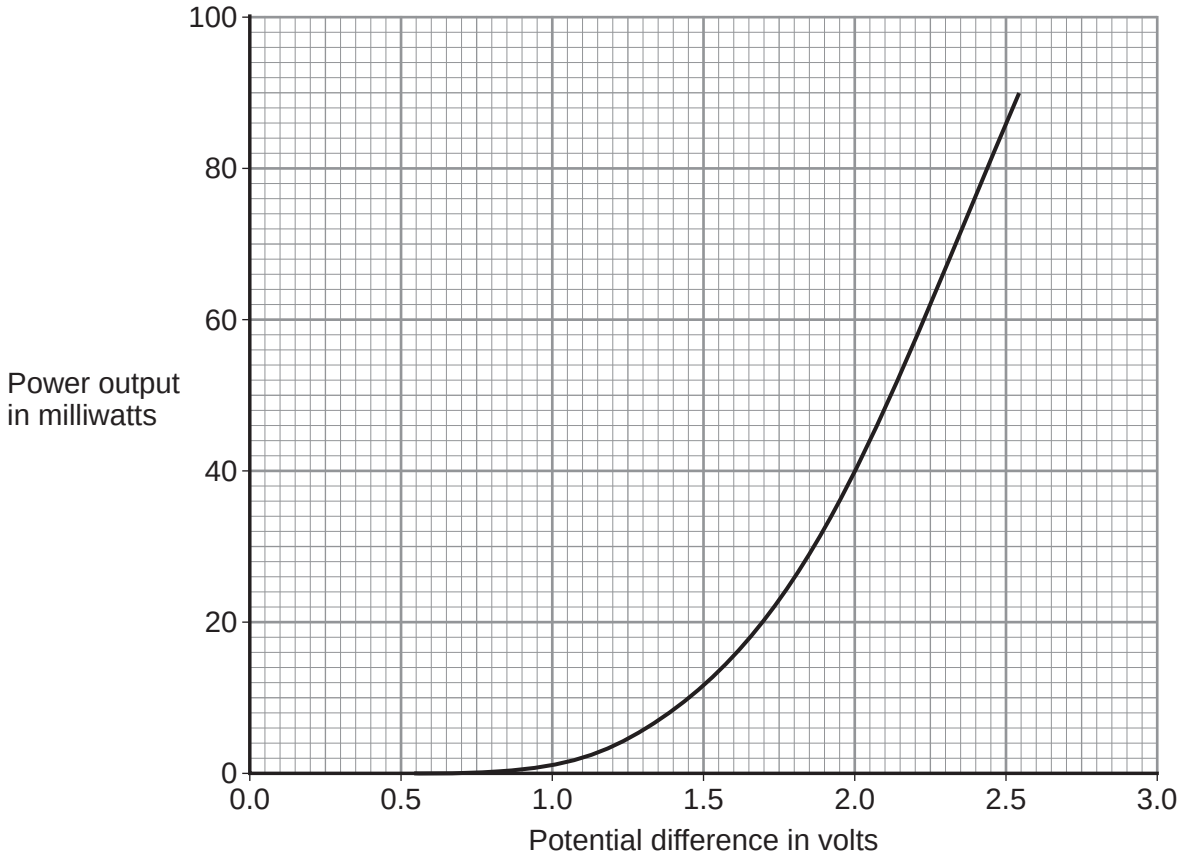

1 milliwatt = 0.001 W

4.2.1.3 Current, resistance and potential difference

Question 60 · continued

The LED is connected in series with a battery and resistor.
The potential difference across the LED is 2.0 V

Use data from **Figure 6** to calculate the energy transferred by the LED in 5 minutes.

Use the correct equation from the Physics Equations Sheet.

[3 marks]

Energy transferred = _____ J

5 (b) The resistance of a filament bulb increases as the temperature of the filament increases.

Explain, in terms of the electrons and ions inside the filament, why the resistance increases.

[2 marks]

5 (c) Why are LED bulbs cheaper to use than filament bulbs or halogen bulbs that produce the same brightness of light?

[1 mark]

7

4.2.1.3 Current, resistance and potential difference

Question 61

June 2017 | PH2HP | Original Q6 | Legacy

6 When two different materials listed in **Table 2** are rubbed together they become electrostatically charged. The polarity of the material that is higher in **Table 2** would become positive.

Table 2

glass
nylon
wool
silk
polyester
PVC

6 (a) **Figure 7** shows a nylon rod being rubbed with a silk cloth.

Figure 7

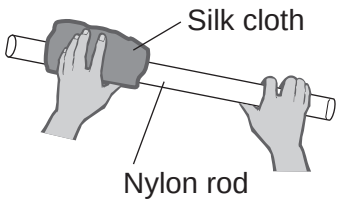

6 (a) (i) Explain why both materials become electrostatically charged.
Include in your answer the polarity of each material.

[3 marks]

4.2.1.3 Current, resistance and potential difference

Question 61 · continued

6 (a) (ii) What difference would it have made if a PVC rod had been rubbed with the silk cloth rather than a nylon rod?

[1 mark]

6 (b) The charged nylon rod is put onto an electric balance.

Figure 8

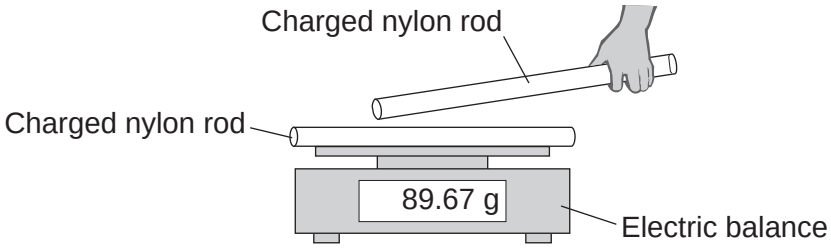

A second identically charged nylon rod is moved towards the rod on the balance, as shown in **Figure 8**.

What will happen to the reading on the balance as the two rods get closer to each other?

The rods do not touch or discharge.

[3 marks]

Tick (✓) **one** box.

The reading will decrease. ☐

The reading will not change. ☐

The reading will increase. ☐

Explain the reason for your answer.

Question 6 continues on the next page

Question 61 · continued

6 (c) A driver often becomes electrostatically charged when in a car. This happens because the driver's clothing rubs against the car seat.

6 (c) (i) The charge on a driver who has just got out of his car is 3.0×10^{-3} coulombs. When the driver starts to close the car door a spark jumps across the air gap between the driver and the door. The spark transfers 27 joules of energy.

Calculate the potential difference between the driver and the car as the driver starts to close the door.

Use the correct equation from the Physics Equations Sheet.

[2 marks]

Potential difference = _____ volts

6 (c) (ii) A scientist investigated how the charge on a driver changed when the driver wore clothes made from different materials. The results from the investigation are given in **Table 3**.

Table 3

Type of material	Charge on the driver $\times 10^{-3}$ coulombs
cotton	1.4 to 1.7
wool	2.4 to 2.5
polyester	3.5 to 3.8

A student looked at the data in **Table 3** and concluded:

'The charge on a driver will always be less if the driver wears clothes made from cotton rather than any other type of material.'

Suggest **two** reasons why this may **not** be a valid conclusion.

[2 marks]

1 _____

2 _____

11

4.2.1.3 Current, resistance and potential difference

Question 62

June 2018 | 8463/1H | Original Q3

0 3 A student investigated how the resistance of a piece of nichrome wire varies with length.

Figure 3 shows part of the circuit that the student used.

Figure 3

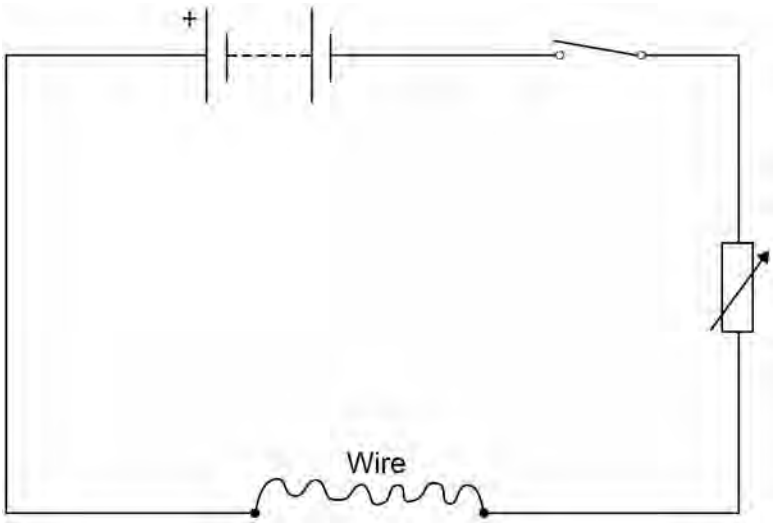

0 3 . 1 Complete **Figure 3** by adding an ammeter and a voltmeter.

Use the correct circuit symbols.

[3 marks]

4.2.1.3 Current, resistance and potential difference

Question 62 · continued

0 3 . 2 Describe how the student would obtain the data needed for the investigation.

Your answer should include a risk assessment for **one** hazard in the investigation.

[6 marks]

0 3 . 3 Why would switching off the circuit between readings have improved the accuracy of the student's investigation?

Tick **one** box.

[1 mark]

- The charge flow through the wire would not change. ☐
- The potential difference of the battery would not increase. ☐
- The power output of the battery would not increase. ☐
- The temperature of the wire would not change. ☐

Question 62 · continued

0 3 . 4 The student used crocodile clips to make connections to the wire.

They could have used a piece of equipment called a 'jockey'.

Figure 4 shows a crocodile clip and a jockey in contact with a wire.

Figure 4



Crocodile clip

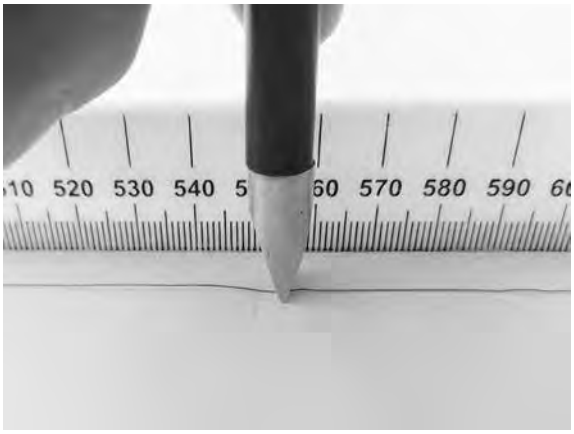

Jockey

How would using the jockey have affected the accuracy and resolution of the student's results compared to using the crocodile clip?

Tick **two** boxes.

[2 marks]

The accuracy of the student's results would be higher. ☐

The accuracy of the student's results would be lower. ☐

The accuracy of the student's results would be the same. ☐

The resolution of the length measurement would be higher. ☐

The resolution of the length measurement would be lower. ☐

The resolution of the length measurement would be the same. ☐

12

4.2.1.3 Current, resistance and potential difference

Question 63

June 2018 | 8463/1H | Original Q5

0 5 . 1 Complete the sentence. Choose answers from the box.

[2 marks]

charge	**potential difference**	**power**	**temperature**	**time**

The current through an ohmic conductor is directly proportional to the _____ across the component, provided that the _____ remains constant.

0 5 . 2 **Figure 7** shows a current – potential difference graph for a filament lamp.

Figure 7

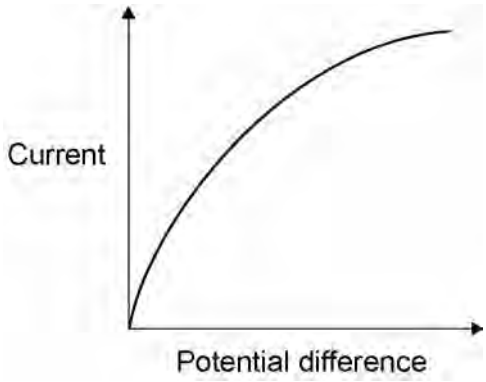

Explain how the resistance of a filament lamp changes as the potential difference across it increases.

[3 marks]

4.2.1.3 Current, resistance and potential difference

Question 63 · continued

0 5 . 3 Many householders are replacing their filament lamps with LED lamps which are more energy efficient.

What does more energy efficient mean?

[1 mark]

Question 5 continues on the next page

Question 63 · continued

A Light Dependent Resistor (LDR) is used to turn on an outside lamp when it gets dark.

Part of the circuit is shown in **Figure 8**.

Figure 8

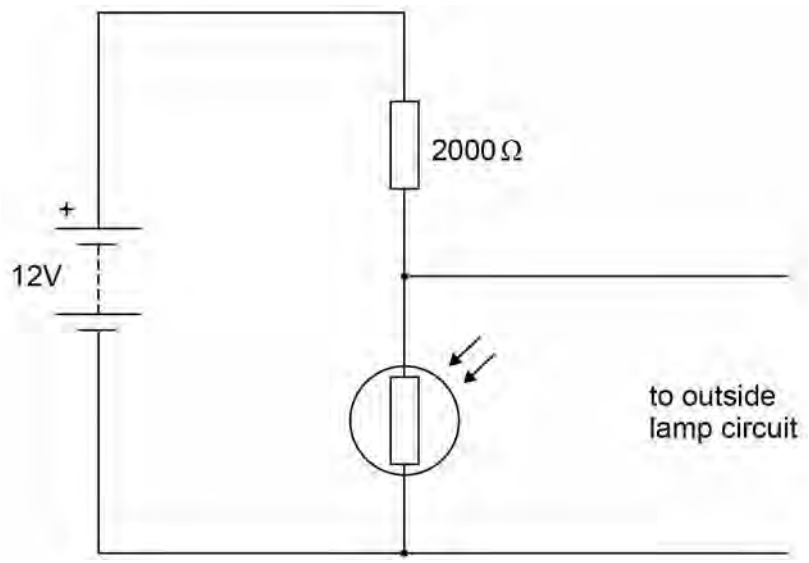

0 5 . 4 The light intensity decreases.

What happens to the potential difference across the LDR and the current in the LDR?

[2 marks]

Potential difference _____

Current _____

0 5 . 5 What is the resistance of the LDR when the potential difference across it is 4 V?

Give a reason for your answer.

[2 marks]

Resistance = _____ Ω

Reason _____

_____

_____

4.2.1.3 Current, resistance and potential difference

Question 63 · continued

0 5 . 6 Calculate the current through the LDR when the resistance of the LDR is 5000 Ω.

Give your answer to 2 significant figures.

[4 marks]

Current = _____ A

14

Turn over for the next question

4.2.1.3 Current, resistance and potential difference

Question 64

June 2018 | 8463/1H | Original Q9

0 9 **Figure 15** shows a coffee machine. The coffee machine uses an electric element to heat water.

Figure 15



0 9 . 1 The coffee machine has a metal case.

Why would it be dangerous for the live wire of the electric cable to touch the metal case?

[1 mark]

0 9 . 2 The power output of the coffee machine is 2.53 kW.

The mains potential difference is 230 V.

Calculate the current in the coffee machine.

[3 marks]

Current = _____ A

4.2.1.3 Current, resistance and potential difference

Question 64 · continued

June 2018 | 8463/1H | Original Q9

0 9 . 3 The coffee machine heats water from 20 °C to 90 °C.

The power output of the coffee machine is 2.53 kW.

The specific heat capacity of water is 4200 J/kg °C.

Calculate the mass of water that the coffee machine can heat in 14 seconds.

[5 marks]

Mass = _____ kg

9

4.2.1.3 Current, resistance and potential difference

Question 65

June 2018 | 8463/2H | Original Q3

0 3 P-waves and S-waves are two types of seismic wave caused by earthquakes.

0 3 . 1 Which **one** of the statements about P-waves and S-waves is correct?

Tick **one** box.

[1 mark]

P-waves and S-waves are transverse. ☐

P-waves and S-waves are longitudinal. ☐

P-waves are transverse and S-waves are longitudinal. ☐

P-waves are longitudinal and S-waves are transverse. ☐

Seismometers on the Earth's surface record the vibrations caused by seismic waves.

Figure 3 shows the vibration recorded by a seismometer for one P-wave.

Figure 3

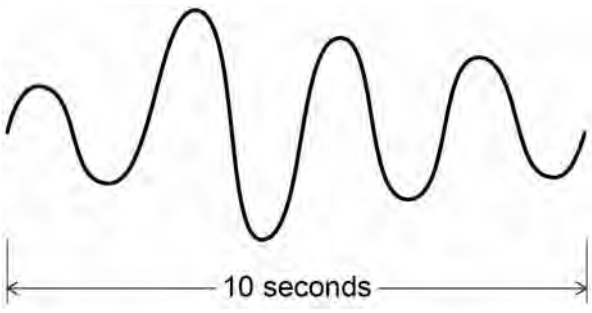

0 3 . 2 Calculate the frequency of the P-wave shown in **Figure 3**.

[1 mark]

Frequency = _____ Hz

4.2.1.3 Current, resistance and potential difference

Question 65 · continued

0 3 . 3 Write down the equation which links frequency, wavelength and wave speed.

[1 mark]

0 3 . 4 The P-wave shown in **Figure 3** is travelling at 7200 m/s.

Calculate the wavelength of the P-wave.

[3 marks]

Wavelength = _____ m

0 3 . 5 Explain why the study of seismic waves provides evidence for the structure of the Earth's core.

[2 marks]

Question 3 continues on the next page

Question 65 · continued

Figure 4 shows a simple seismometer made by a student.

Figure 4

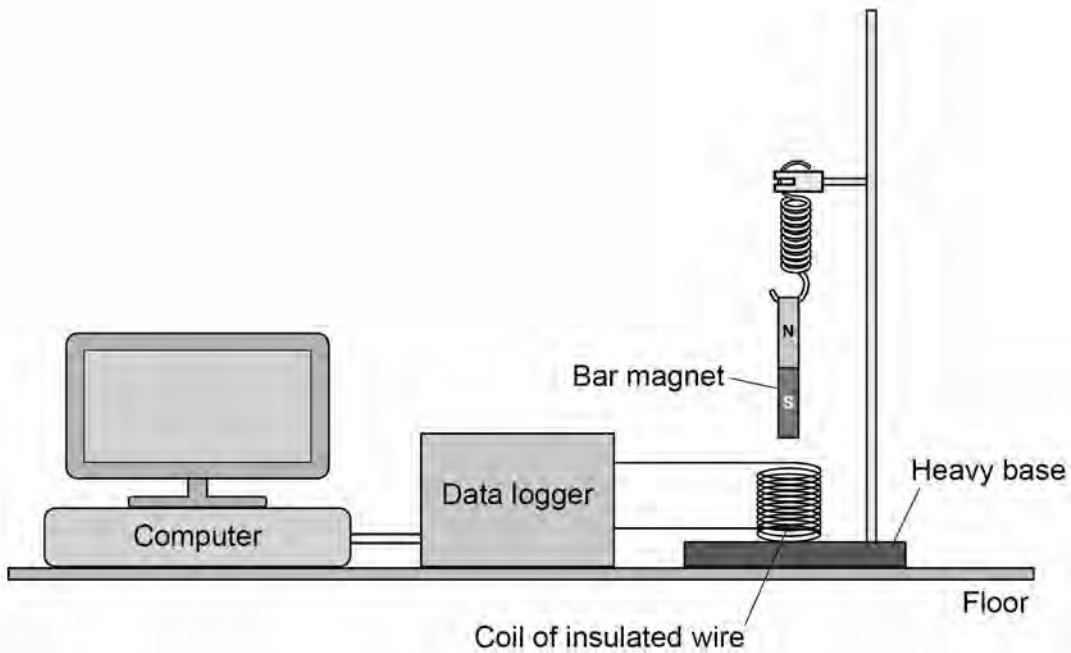

To test that the seismometer works, the student pushes the bar magnet into the coil and then releases the bar magnet.

0 3 . 6 Why does the movement of the bar magnet induce a potential difference across the coil?

[1 mark]

0 3 . 7 Why is the induced potential difference across the coil alternating?

[1 mark]

Question 65 · continued

0 3 . 8 **Figure 5** shows how the potential difference induced across the coil varies after the bar magnet has been released.

Figure 5

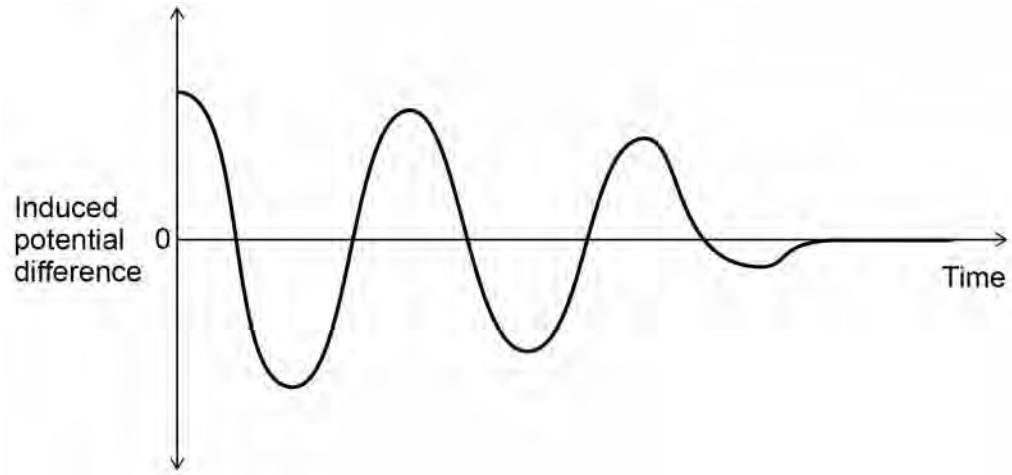

Which statement describes the movement of the magnet when the induced potential difference is zero?

Tick **one** box.

[1 mark]

Accelerating upwards. ☐

Constant speed upwards. ☐

Decelerating downwards. ☐

Stationary. ☐

0 3 . 9 The seismometer cannot detect small vibrations.

Suggest **two** changes to the design of the seismometer that would make it more sensitive to small vibrations.

[2 marks]

1 _____

_____

2 _____

_____

13

4.2.1.3 Current, resistance and potential difference

Question 66

June 2018 | 8463/2H | Original Q7

0 7 A student used a simple transformer to investigate how the number of turns on the secondary coil affects the potential difference (p.d.) across the secondary coil.

The student kept the p.d. across the primary coil fixed at 2V.

Figure 12 shows the results collected by the student.

Figure 12

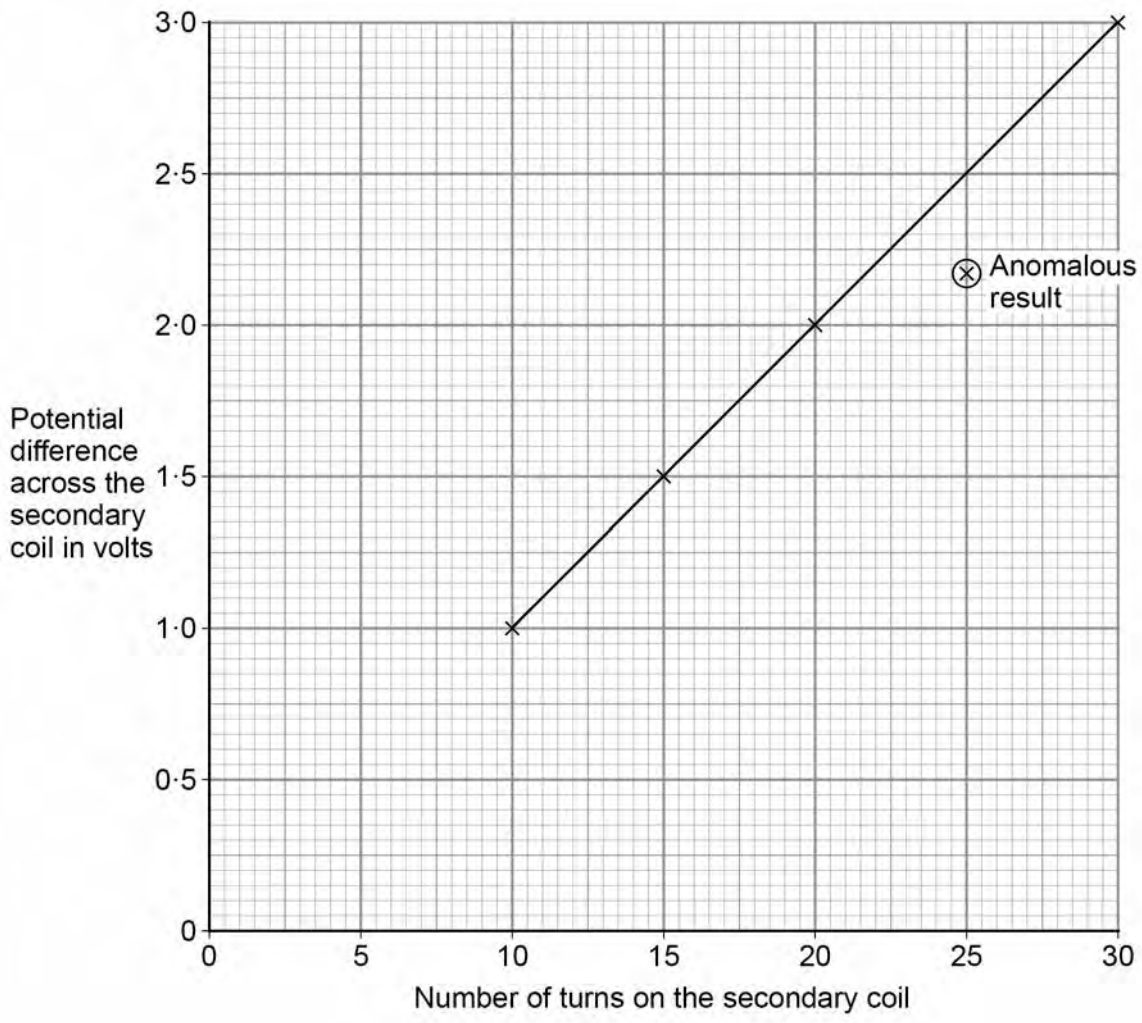

0 7 . 1 **Figure 12** contains one anomalous result.

Suggest **one** possible reason why this anomalous result occurred.

[1 mark]

4.2.1.3 Current, resistance and potential difference

Question 66 · continued

0 7 . 2 The transformer changes from being a step-down to a step-up transformer.

How can you tell from **Figure 12** that this happens?

[1 mark]

Question 7 continues on the next page

Question 66 · continued

A spot-welder is a device that uses a transformer to produce a large current to join sheets of metal together.

Figure 13 shows a transformer demonstrating how a large current can heat and join two nails together.

Figure 13

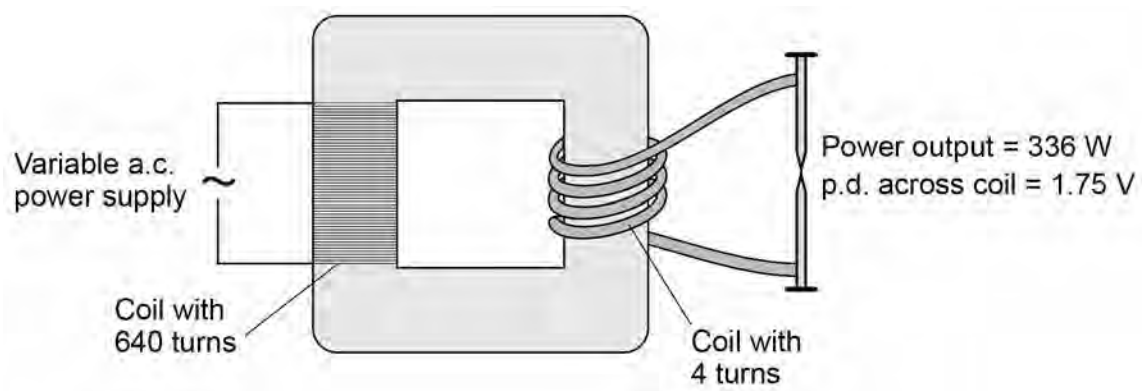

0 7 . 3 How does the amount of infrared radiation emitted by the nails change when the power supply is switched on?

[1 mark]

0 7 . 4 Calculate the current from the power supply needed to provide a power output of 336 W.

Use the data in **Figure 13**.

The transformer is 100% efficient.

[5 marks]

Current = _____ A

8

4.2.1.3 Current, resistance and potential difference

Question 67

June 2019 | 8463/1H | Original Q1

0 1 Light bulbs are labelled with a power input.

0 1 . 1 What does power input mean?

[1 mark]

Tick (✓) **one** box.

- The charge transferred each second by the bulb. ☐
- The current through the bulb. ☐
- The energy transferred each second to the bulb. ☐
- The potential difference across the bulb. ☐

0 1 . 2 Write down the equation which links current, potential difference and power.

[1 mark]

_____

0 1 . 3 A light bulb has a power input of 40 W

The mains potential difference is 230 V

Calculate the current in the light bulb.

[3 marks]

_____

_____

_____

Current = _____ A

Question 67 · continued

Table 1 shows information about three different light bulbs.

Table 1

Light bulb	Total power input in watts	Useful power output in watts	Efficiency
P	6.0	5.4	0.90
Q	40	2.0	0.05
R	9.0	**X**	0.30

0 1 . 4 Write down the equation which links efficiency, total power input and useful power output.

[1 mark]

0 1 . 5 Calculate the value of **X** in **Table 1**.

[3 marks]

X = _____ W

0 1 . 6 In addition to power input, light bulbs should also be labelled with the rate at which they emit visible light.

Suggest why.

[2 marks]

11

4.2.1.3 Current, resistance and potential difference

Question 68

June 2019 | 8463/1H | Original Q6

0 6 **Figure 7** shows a person using an electric lawn mower.

Figure 7



0 6 . 1 The lawn mower is connected to the mains electricity supply.

What is the frequency of the mains electricity supply in the UK?

[2 marks]

Frequency = _____ Unit _____

4.2.1.3 Current, resistance and potential difference

Question 68 · continued

The lawn mower has a switch on each side of the handle.

Figure 8 shows the circuit diagram for the lawn mower.

Figure 8

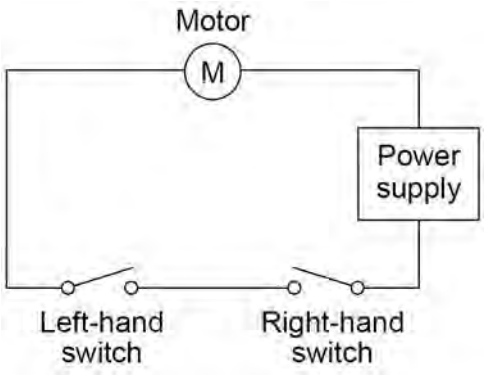

0 6 . 2 The motor in the lawn mower can only be turned on when the person using it holds the handle of the lawn mower with both hands.

Explain why.

[2 marks]

0 6 . 3 The power input to the motor is 1.8 kW

The resistance of the motor is 32 Ω

Calculate the current in the motor.

[3 marks]

Current = _____ A

4.2.1.3 Current, resistance and potential difference

Question 68 · continued

0 6 . 4 The useful power output from the motor is 1.5 kW

Calculate the time it takes for the motor to transfer 450 000 J of useful energy.

[3 marks]

Time = _____ seconds

1

4.2.1.3 Current, resistance and potential difference

Question 69

June 2019 | 8463/1H | Original Q10

1 0 **Figure 12** shows a student after rubbing a balloon on his hair.

The balloon and hair have become charged.

Figure 12

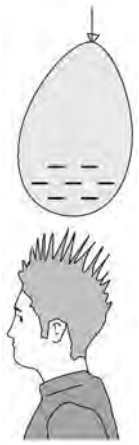

1 0 . 1 Describe the force that acts on the student's hair in **Figure 12**.

[2 marks]

1 0 . 2 An earthed conductor was brought near the charged student.
A spark jumped between the conductor and the student.

The potential difference between the conductor and the student was 2.5 kV
The energy transferred by the spark was 0.0050 J

Calculate the charge transferred by the spark.

[3 marks]

Charge = _____ C

4.2.1.3 Current, resistance and potential difference

Question 69 · continued

June 2019 | 8463/1H | Original Q10

1 0 . 3 A defibrillator can transfer a charge to regulate a person's heartbeat.

Figure 13 shows a defibrillator.

Figure 13



When the defibrillator is in use, a potential difference of 4800 V is applied across the person's chest.

A charge of 0.16 coulombs passes through the person's chest in 4.0 ms

Calculate the resistance of the person's chest.

[5 marks]

Resistance = _____ Ω

10

4.2.1.3 Current, resistance and potential difference

Question 70

November 2020 | 8463/1H | Original Q1

0 1 A student investigated how the current in a filament lamp varied with the potential difference across the filament lamp.

Figure 1 shows part of the circuit used.

Figure 1

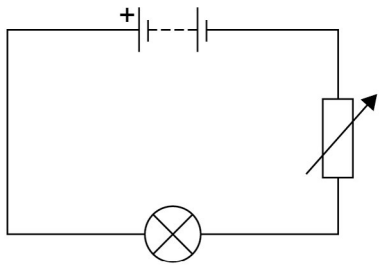

0 1 . 1 Complete **Figure 1** by adding an ammeter and a voltmeter.

Use the correct circuit symbols.

[3 marks]

Question 1 continues on the next page

4.2.1.3 Current, resistance and potential difference

Question 70 · continued

Figure 2 shows some of the results.

Figure 2

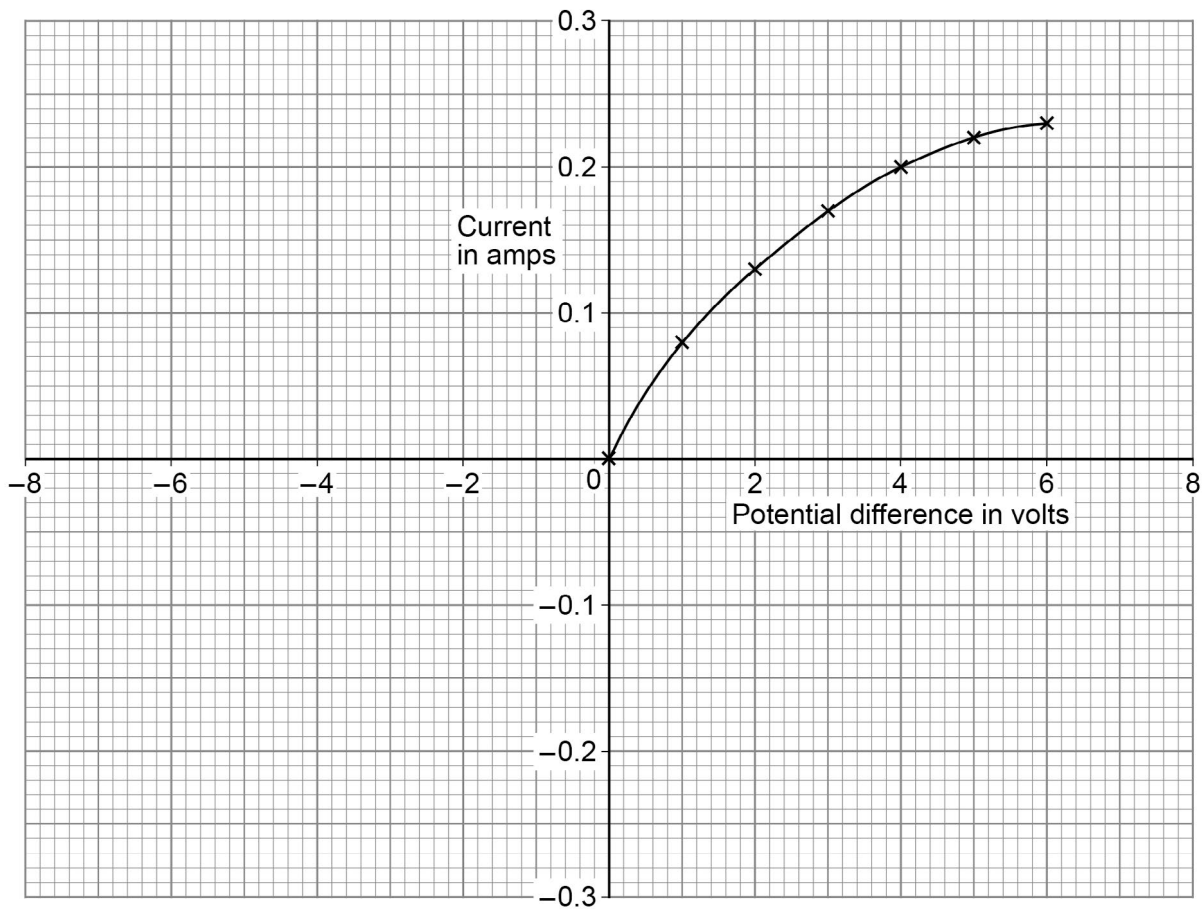

0 1 . 2 The student reversed the connections to the power supply and obtained negative values for the current and potential difference.

Draw a line on **Figure 2** to show the relationship between the negative values of current and potential difference.

[2 marks]

4.2.1.3 Current, resistance and potential difference

Question 70 · continued

0 1 . 3 Write down the equation which links current (I), potential difference (V) and resistance (R).

[1 mark]

0 1 . 4 Determine the resistance of the filament lamp when the potential difference across it is 1.0 V.

Use data from **Figure 2**.

[4 marks]

Resistance = _____ Ω

0 1 . 5 A second student did the same investigation. The ammeter used had a zero error.

What is meant by a zero error?

[1 mark]

11

4.2.1.3 Current, resistance and potential difference

Question 71

November 2020 | 8463/1H | Original Q8

0 8 A student investigated how the total resistance of identical resistors connected in parallel varied with the number of resistors.

The student used an ohmmeter to measure the total resistance of the resistors.

Figure 11 shows the student's circuit with 3 resistors.

Figure 11

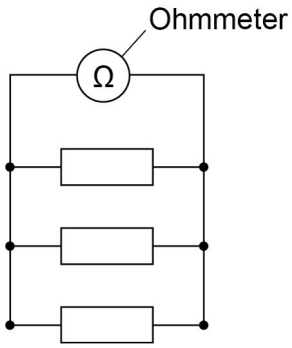

The student repeated each reading of resistance three times.

Table 1 shows some of the results for 3 resistors in parallel.

Table 1

Number of resistors	Total resistance in ohms			
	Reading 1	Reading 2	Reading 3	Mean
3	15.8	15.3	**X**	15.7

0 8 . 1 Calculate value **X** in **Table 1**.

[2 marks]

X = _____ Ω

4.2.1.3 Current, resistance and potential difference

Question 71 · continued

0 8 . 2 The student thought that taking a fourth reading would improve the precision of the results.

The fourth reading was 16.2 Ω.

Explain why the student was wrong.

[2 marks]

Question 8 continues on the next page

4.2.1.3 Current, resistance and potential difference

Question 71 · continued

Figure 12 shows the results from the investigation.

Figure 12

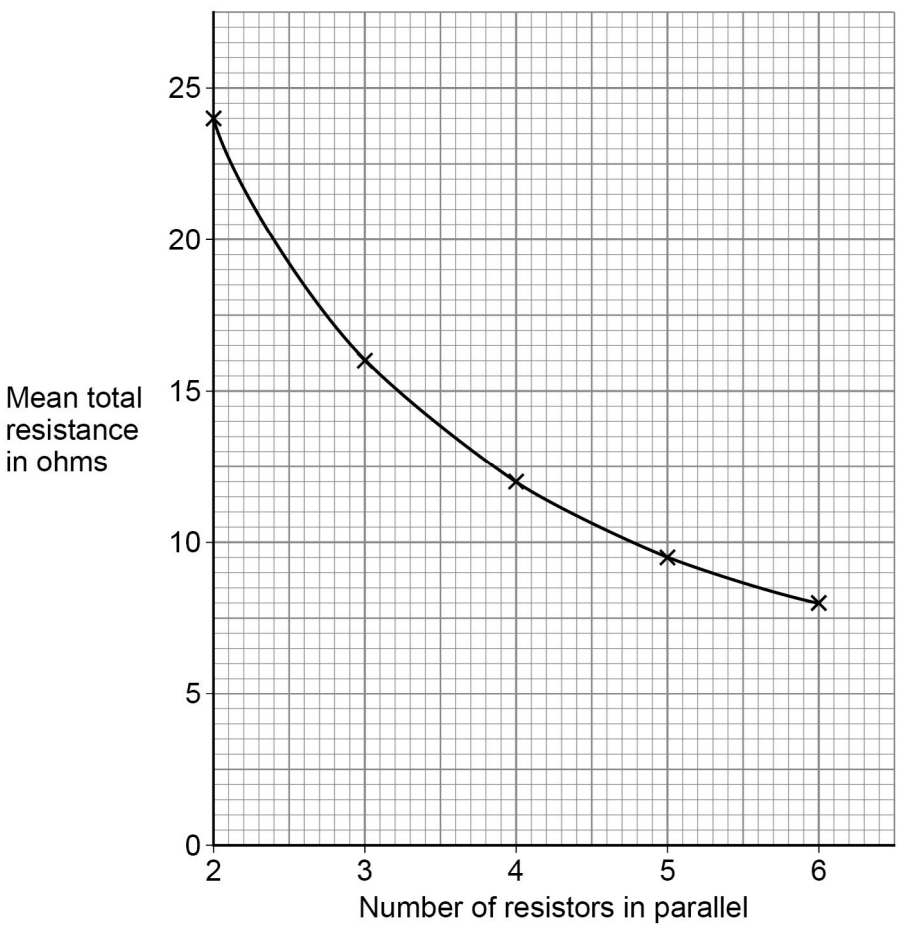

0 8 . 3 The student concluded that the number of resistors in parallel was inversely proportional to the mean total resistance.

Explain why the student was correct.

Use data from **Figure 12** in your answer.

[3 marks]

4.2.1.3 Current, resistance and potential difference

Question 71 · continued

0 8 . 4 Explain why adding resistors in parallel decreases the total resistance.

[2 marks]

9

Turn over for the next question

4.2.1.3 Current, resistance and potential difference

Question 72

November 2020 | 8463/1H | Original Q9

0 9 **Figure 13** shows part of a mains electricity lighting circuit in a house.

Figure 13

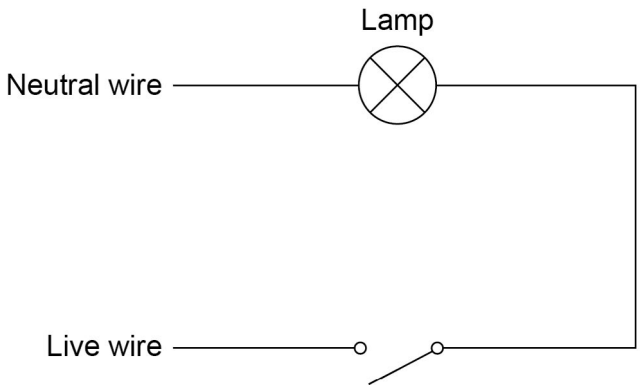

0 9 . 1 A fault in the switch caused a householder to receive a mild electric shock before a safety device switched the circuit off.

The mean power transfer to the person was 5.75 W.

The potential difference across the person was 230 V.

Calculate the resistance of the person.

[5 marks]

Resistance = _____ Ω

4.2.1.3 Current, resistance and potential difference

Question 72 · continued

0 9 . 2 An electrician replaced the switch.

The electrician would have received an electric shock unless the circuit was disconnected from the mains supply.

Explain why.

[3 marks]

Question 9 continues on the next page

Question 72 · continued

0 9 . 3 The current from an electric shock causes a person's muscles to contract. The person cannot let go of the electrical circuit if the current is too high.

Figure 14 shows how the maximum current at which a person can let go depends on the frequency of the electricity supply.

Figure 14

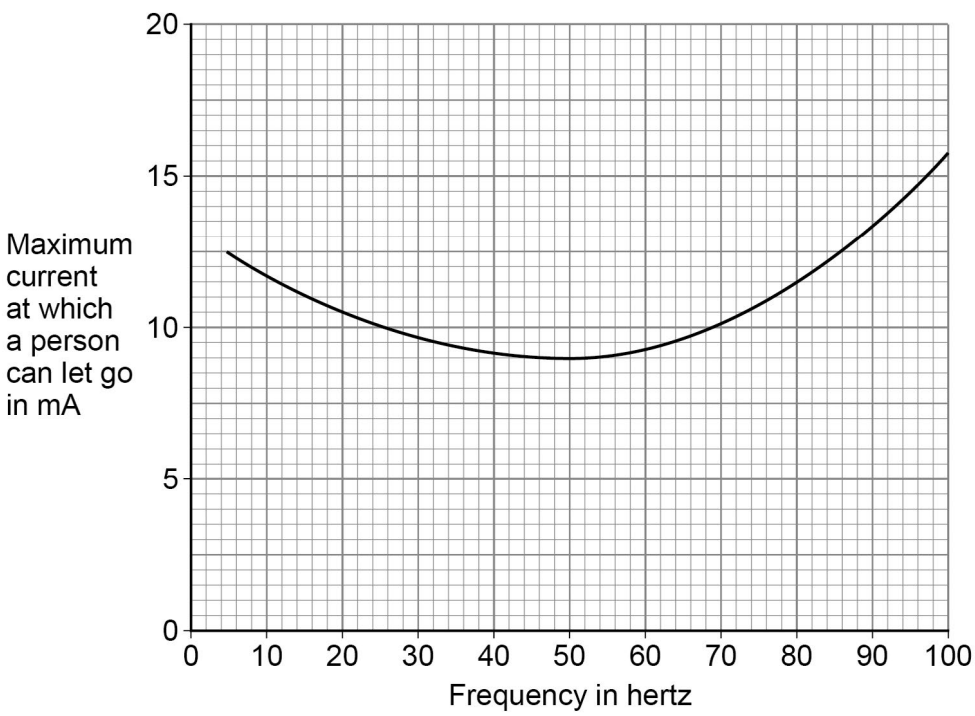

The UK mains frequency is 50 Hz.

Explain why it would be safer if the UK mains frequency was **not** 50 Hz.

[2 marks]

10

4.2.1.3 Current, resistance and potential difference

Question 73

November 2020 | 8463/2H | Original Q7

0 7 **Figure 10** shows a portable power supply.

Figure 10

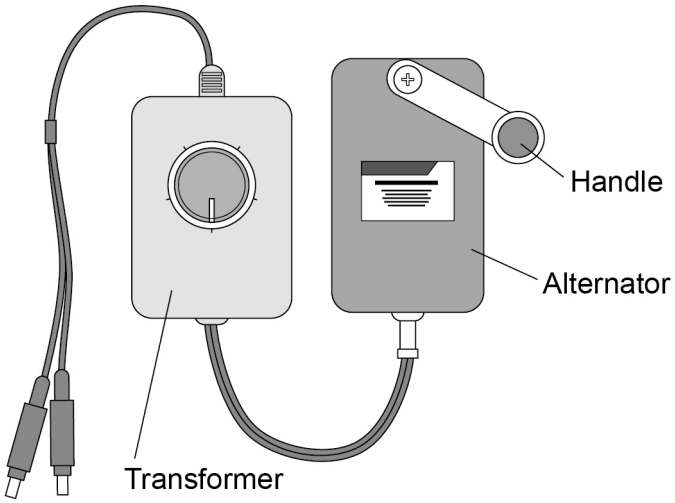

0 7 . 1 The portable power supply has an alternator connected to a transformer.

The transformer can be adjusted to have different numbers of turns on the secondary coil.

Suggest why.

[2 marks]

4.2.1.3 Current, resistance and potential difference

Question 73 · continued

0 7 . 2 A lamp is connected to the power supply.

The lamp requires an input potential difference of 5.0 V.

The alternator generates a potential difference of 1.5 V.

The primary coil of the transformer has 150 turns.

Calculate the number of turns needed on the secondary coil.

[3 marks]

Number of turns on the secondary coil = _____

Question 7 continues on the next page

4.2.1.3 Current, resistance and potential difference

Question 73 · continued

Figure 11 shows the inside parts of the alternator.

Figure 11

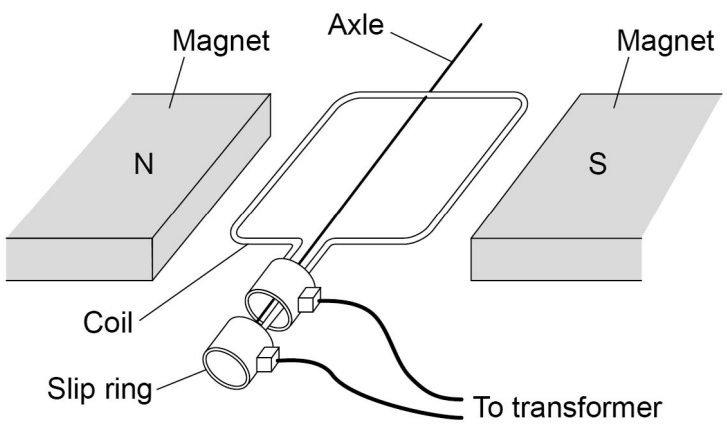

0 7 . 3 The handle of the alternator is turned, causing the coil to rotate.

Explain why an alternating current is induced in the coil.

[5 marks]

4.2.1.3 Current, resistance and potential difference

Question 73 · continued

0 7 . 4 Suggest the purpose of the slip rings.

[1 mark]

0 7 . 5 The alternator from the portable power supply is disconnected from the transformer and lamp.

Explain why the handle of the alternator becomes much easier to turn.

[3 marks]

14

4.2.1.3 Current, resistance and potential difference

Question 74

November 2021 | 8463/1H | Original Q1

0 1 **Figure 1** shows an electric car being recharged.

Figure 1

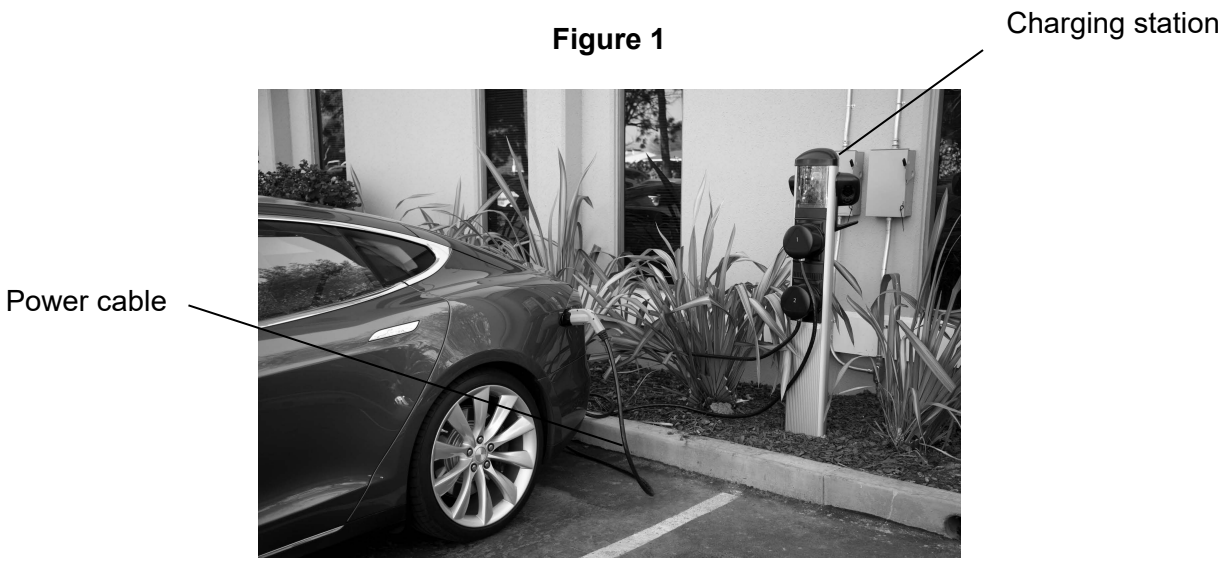

0 1 . 1 The charging station applies a direct potential difference across the battery of the car.

What does 'direct potential difference' mean?

[1 mark]

Question 1 continues on the next page

4.2.1.3 Current, resistance and potential difference

Question 74 · continued

0 1 . 2 Which equation links energy transferred (E), power (P) and time (t)?

[1 mark]

Tick (✓) **one** box.

energy transferred = $\frac{\text{power}}{\text{time}}$ ☐

energy transferred = $\frac{\text{time}}{\text{power}}$ ☐

energy transferred = power × time ☐

energy transferred = power^2 × time ☐

0 1 . 3 The battery in the electric car can store 162 000 000 J of energy.

The charging station has a power output of 7200 W.

Calculate the time taken to fully recharge the battery from zero.

[3 marks]

Time taken = _____ s

4.2.1.3 Current, resistance and potential difference

Question 74 · continued

0 1 . 4 Which equation links current (I), potential difference (V) and resistance (R)?

[1 mark]

Tick (✓) **one** box.

$I = V \times R$ ☐

$I = V^2 \times R$ ☐

$R = I \times V$ ☐

$V = I \times R$ ☐

0 1 . 5 The potential difference across the battery is 480 V.

There is a current of 15 A in the circuit connecting the battery to the motor of the electric car.

Calculate the resistance of the motor.

[3 marks]

Resistance = _____ Ω

Question 1 continues on the next page

4.2.1.3 Current, resistance and potential difference

Question 74 · continued

0 1 . 6 Different charging systems use different electrical currents.

- Charging system **A** has a current of 13 A.
- Charging system **B** has a current of 26 A.
- The potential difference of both charging systems is 230 V.

How does the time taken to recharge a battery using charging system **A** compare with the time taken using charging system **B**?

[1 mark]

Tick (✓) **one** box.

Time taken using system **A** is half the time of system **B** ☐

Time taken using system **A** is the same as system **B** ☐

Time taken using system **A** is double the time of system **B** ☐

10

4.2.1.3 Current, resistance and potential difference

Question 75

November 2021 | 8463/1H | Original Q3

0 3 Student **A** investigated how the current in resistor **R** at constant temperature varied with the potential difference across the resistor.

Student **A** recorded both positive and negative values of current.

Figure 2 shows the circuit Student **A** used.

Figure 2

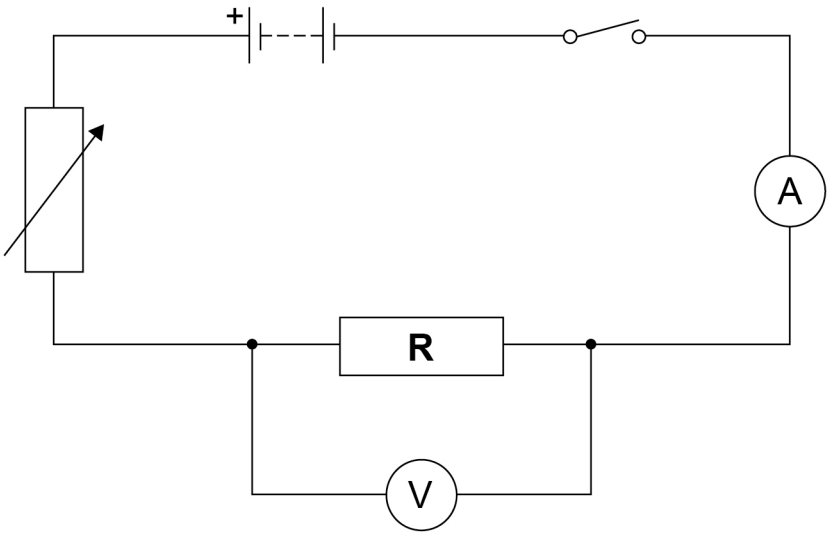

0 3 . 1 Describe a method that Student **A** could use for this investigation.

[6 marks]

4.2.1.3 Current, resistance and potential difference

Question 75 · continued

0 3 . 2 Student **B** repeated the investigation.

During Student **B**'s investigation the temperature of resistor **R** increased.

Explain how the increased temperature of resistor **R** would have affected Student **B**'s results.

[2 marks]

Question 3 continues on the next page

4.2.1.3 Current, resistance and potential difference

Question 75 · continued

Figure 3 shows the scale on a moving coil ammeter at one time in the investigation.

Figure 3

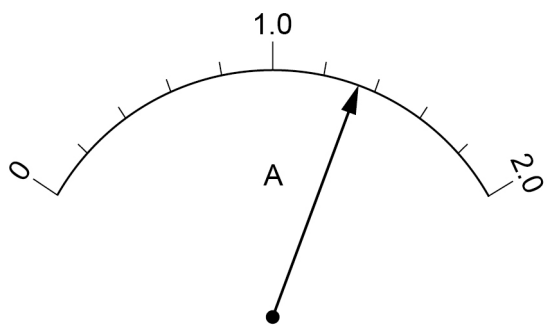

0 3 . 3 What is the resolution of the moving coil ammeter?

[1 mark]

Resolution = _____ A

4.2.1.3 Current, resistance and potential difference

Question 75 · continued

0 3 . 4 Student **B** replaced the moving coil ammeter with a digital ammeter.

Figure 4 shows the reading on the digital ammeter.

Figure 4

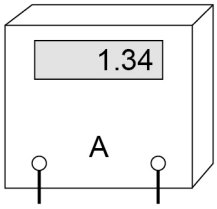

The digital ammeter has a higher resolution than the moving coil ammeter.

Give **one** other reason why it would have been better to use the digital ammeter throughout this investigation.

[1 mark]

10

4.2.1.3 Current, resistance and potential difference

Question 76

November 2021 | 8463/1H | Original Q7

0 7 A student investigated how the current in a series circuit varied with the resistance of a variable resistor.

Figure 8 shows the circuit used.

Figure 8

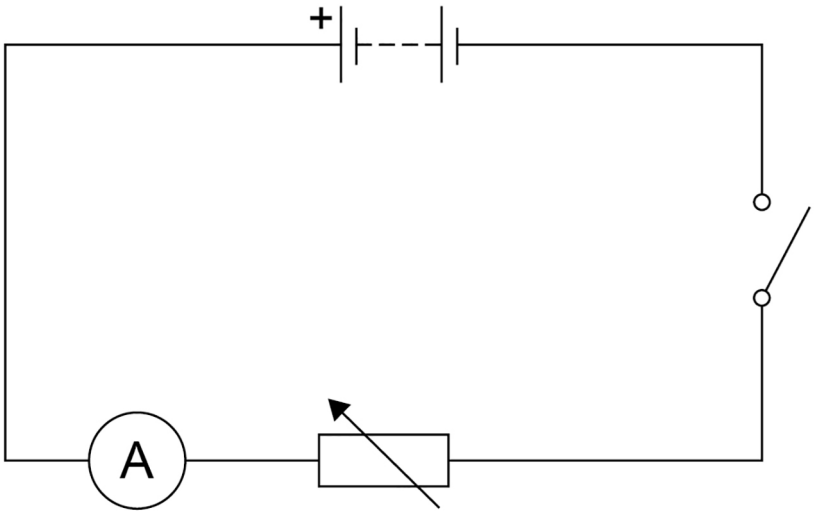

Figure 9 shows the results.

Figure 9

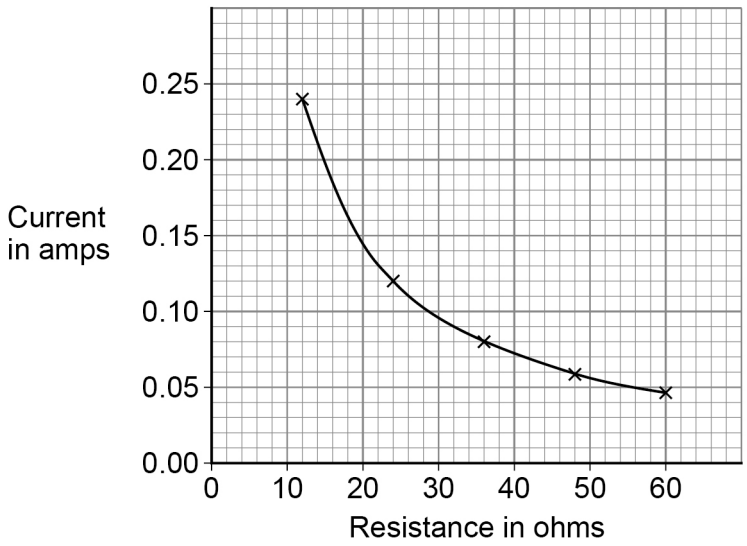

4.2.1.3 Current, resistance and potential difference

Question 76 · continued

0 7 . 1 The battery had a power output of 230 mW when the resistance of the variable resistor was 36 Ω.

Determine the potential difference across the battery.

[4 marks]

Potential difference = _____ V

0 7 . 2 The student concluded:

'the current in the circuit was inversely proportional to the resistance of the variable resistor.'

Explain how **Figure 9** shows that the student is correct.

[2 marks]

Question 7 continues on the next page

4.2.1.3 Current, resistance and potential difference

Question 76 · continued

0 7 . 3 **Figure 10** shows a circuit with a switch connected incorrectly.

Figure 10

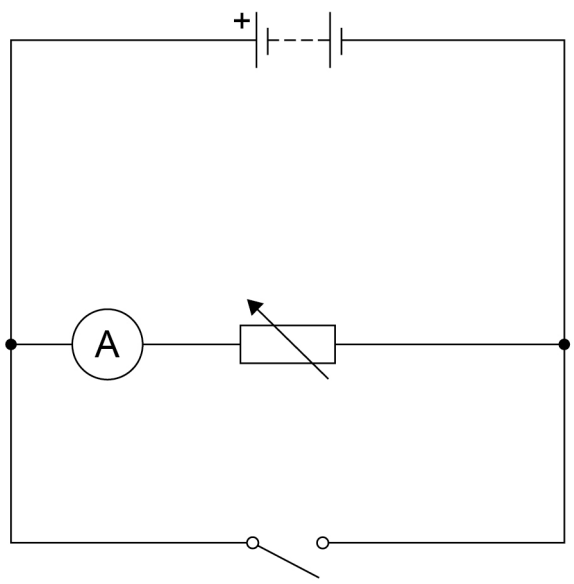

Explain how closing the switch would affect the current in the variable resistor.

[2 marks]

8

4.2.1.3 Current, resistance and potential difference

Question 77

November 2021 | 8463/1H | Original Q10

1 0 **Figure 13** shows some overhead power cables in the National Grid.

Figure 13

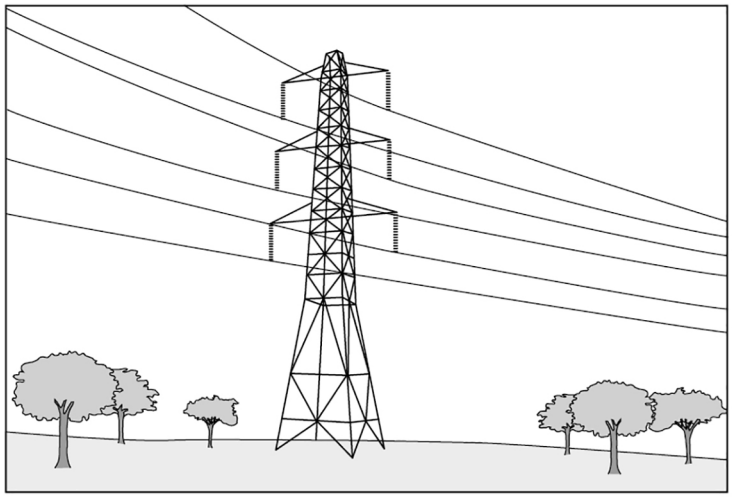

1 0 . 1 Explain the advantage of transmitting electricity at a very high potential difference.

[3 marks]

4.2.1.3 Current, resistance and potential difference

Question 77 · continued

1 0 . 2 It is dangerous for a person to fly a kite near an overhead power cable.

Figure 14 shows a person flying a kite.

Figure 14



The person could receive a fatal electric shock if the kite was very close to, but not touching the power cable.

Explain why.

[3 marks]

Question 10 continues on the next page

4.2.1.3 Current, resistance and potential difference

Question 77 · continued

November 2021 | 8463/1H | Original Q10

A scientist investigated how the potential difference needed for air to conduct charge varies with the distance between a cable and earth.

Figure 15 shows the results.

Figure 15

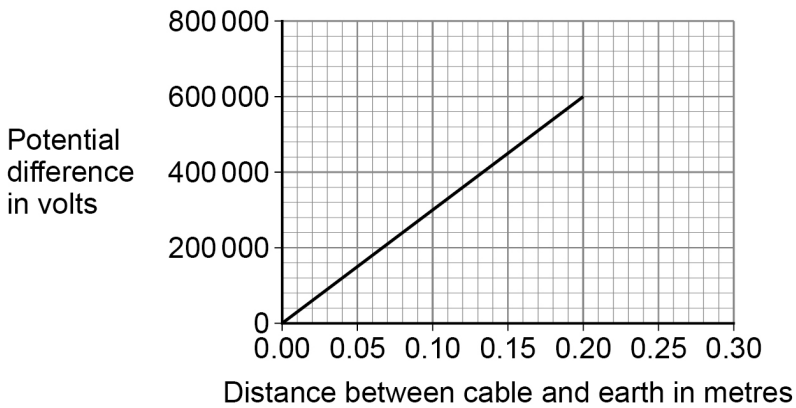

1 0 . 3 The data in **Figure 15** gives the relationship between potential difference and distance when the air is dry.

When the humidity of air increases the air becomes a better conductor of electricity.

Draw a line on **Figure 15** to show how the potential difference changes with distance if the humidity of the air increases.

[2 marks]

4.2.1.3 Current, resistance and potential difference

Question 77 · continued

1 0 . 4 **Figure 16** shows a cross-section through a power cable.

Figure 16

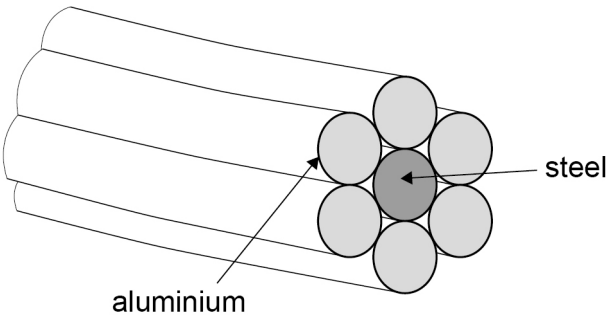

A 1 metre length of a single aluminium wire is a better conductor than a 1 metre length of the steel wire.

The individual wires behave as if they are resistors connected in parallel.

Explain why the current in the steel wire is different to the current in a single aluminium wire.

[2 marks]

10

4.2.1.3 Current, resistance and potential difference

Question 78

June 2022 | 8463/1H | Original Q3

0 3 An engineering company has invented pavement tiles that generate electricity as people walk on them.

Figure 3 shows someone walking on the pavement tiles.

Figure 3



Use the Physics Equations Sheet to answer questions **03.1** and **03.2**.

0 3 . 1 What equation links current (I), potential difference (V) and power (P)?

[1 mark]

Tick (✓) **one** box.

$P = \frac{V}{I}$ ☐

$P = V \times I$ ☐

$I = P \times V$ ☐

$V = I^2 \times P$ ☐

4.2.1.3 Current, resistance and potential difference

Question 78 · continued

0 3 . 2 When a person walks on a tile, a potential difference of 40 V is induced across the tile.

The power output of the tile is 4.4 W.

Calculate the current in the tile.

[3 marks]

Current = _____ A

Question 3 continues on the next page

Question 78 · continued

Use the Physics Equations Sheet to answer questions **03.3** and **03.4**.

0 3 . 3 What equation links efficiency, total power input and useful power output?

[1 mark]

Tick (✓) **one** box.

Efficiency = $\frac{\text{useful power output}}{\text{total power input}}$ ☐

Efficiency = $\frac{\text{total power input}}{\text{useful power output}}$ ☐

Efficiency = useful power output × total power input ☐

0 3 . 4 The tiles are used to power LED lights in the pavement.

An LED light has a total power input of 4.0 W.

The efficiency of the LED light is 0.85

Calculate the useful power output of the LED light.

[3 marks]

Useful power output = _____ W

8

4.2.1.3 Current, resistance and potential difference

Question 79

June 2022 | 8463/1H | Original Q6

0 6 **Figure 8** shows how electricity is supplied to consumers by the National Grid.

Figure 8

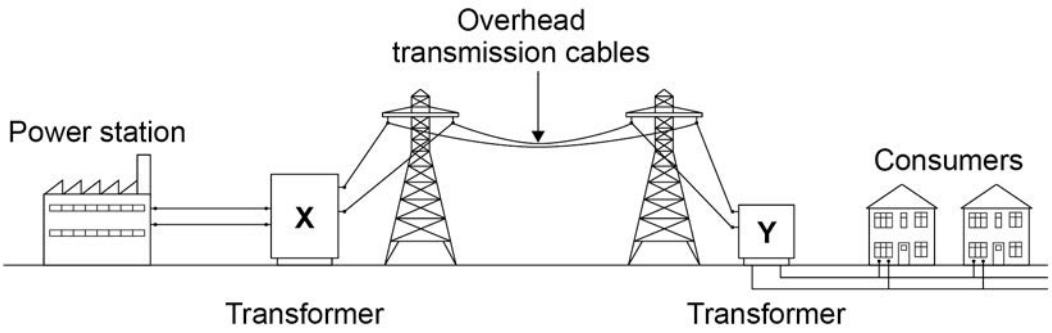

0 6 . 1 Explain why transformer **X** is used in the National Grid.

[4 marks]

0 6 . 2 Explain why transformer **Y** is used in the National Grid.

[2 marks]

4.2.1.3 Current, resistance and potential difference

Question 79 · continued

June 2022 | 8463/1H | Original Q6

0 6 . 3 The town of Hornsdale in Australia has electricity supplied by a huge battery.

On one day the battery transferred 3.24×10^{11} J of energy to the town.

The potential difference of the town's electricity supply is 230 V.

Calculate the charge flow to the town on this day.

Use the Physics Equations Sheet.

Give your answer to **3** significant figures.

[4 marks]

Charge flow (3 significant figures) = _____ C

10

4.2.1.3 Current, resistance and potential difference

Question 80

June 2022 | 8463/2HR | Original Q7

0 7 The National Grid uses transformers to change potential difference (pd).

Figure 12 shows a transformer.

Figure 12

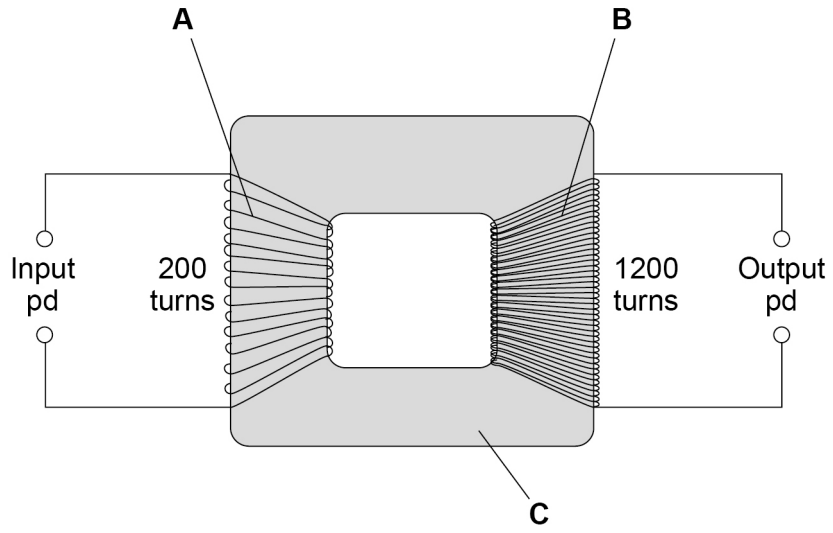

0 7 . 1 Identify the parts of the transformer labelled in **Figure 12**.

[2 marks]

A _____

B _____

C _____

0 7 . 2 There is an alternating input pd of 230 V.

Determine the output pd.

Use the Physics Equations Sheet.

[3 marks]

_____

_____

_____

_____

_____

Output pd = _____ V

4.2.1.3 Current, resistance and potential difference

Question 80 · continued

0 7 . 3 The input pd causes an alternating current.

Explain why there is an alternating current in the output when the transformer is connected to a circuit.

[3 marks]

Question 7 continues on the next page

Question 80 · continued

Figure 13 shows a large cable supported by two wooden poles. The cable is connected to an electricity supply.

Figure 13

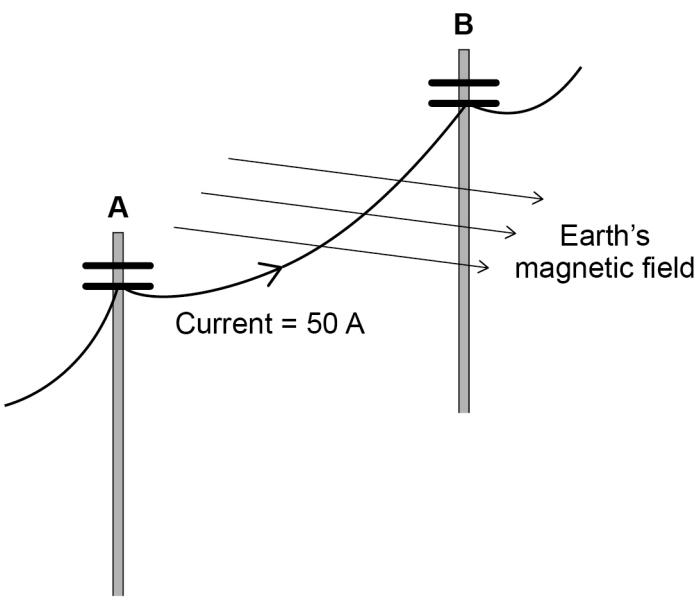

0 7 . 4 There is a force on the cable due to the Earth's magnetic field when the current is in the direction **A** to **B**.

What is the direction of this force?

[1 mark]

Tick (✓) **one** box.

Down ☐

Left ☐

Right ☐

Up ☐

4.2.1.3 Current, resistance and potential difference

Question 80 · continued

0 7 . 5 The cable experiences a force of 0.045 N due to the Earth's magnetic field.

magnetic flux density = 60 μT

current = 50 A

Calculate the length of the cable between **A** and **B**.

Use the Physics Equations Sheet.

[4 marks]

Length = _____ m

0 7 . 6 State **one** assumption you made in your calculation.

[1 mark]

_____

14

4.2.1.3 Current, resistance and potential difference

Question 81

June 2023 | 8463/1H | Original Q1

0 1 **Figure 1** shows how the National Grid connects a power station to consumers.

Figure 1

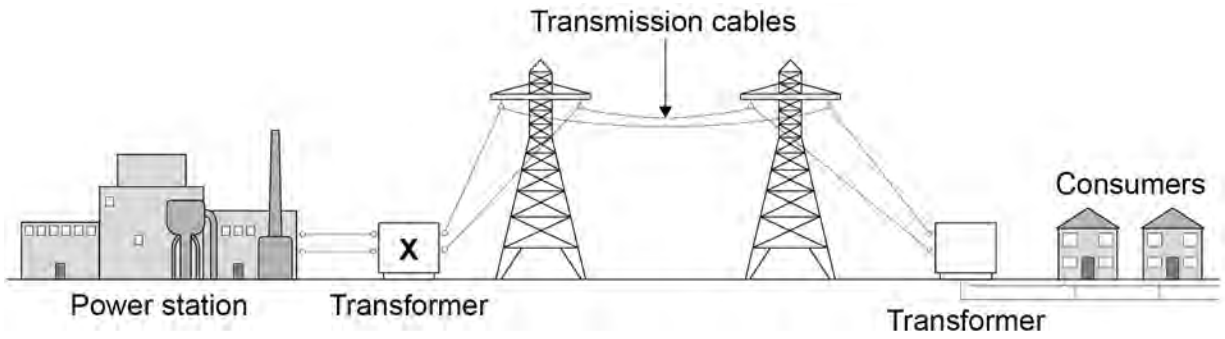

0 1 . 1 Complete the sentences.

[2 marks]

Transformer **X** causes the potential difference to _____ .

Transformer **X** causes the current to _____ .

Use the Physics Equations Sheet to answer questions **01.2** and **01.3**.

0 1 . 2 Which equation links current (I), power (P) and resistance (R)?

[1 mark]

Tick (✓) **one** box.

$P = \frac{I}{R}$ ☐

$P = \frac{I}{R^2}$ ☐

$P = I^2 R$ ☐

$P = IR$ ☐

4.2.1.3 Current, resistance and potential difference

Question 81 · continued

0 1 . 3 A transmission cable has a power loss of 1.60×10^9 W.

The current in the cable is 2000 A.

Calculate the resistance of the cable.

[3 marks]

Resistance = _____ Ω

Use the Physics Equations Sheet to answer questions **01.4** and **01.5**.

0 1 . 4 Write down the equation which links efficiency, total energy input and useful energy output.

[1 mark]

0 1 . 5 The total energy input to the National Grid from one power station is 34.2 GJ.

The National Grid has an efficiency of 0.992

Calculate the useful energy output from this power station to consumers in GJ.

[3 marks]

Useful energy output = _____ GJ

10

4.2.1.3 Current, resistance and potential difference

Question 82

June 2023 | 8463/1H | Original Q3

0 3 **Figure 4** shows an electrical circuit used to heat the windscreen of a car.

Each resistor in the circuit represents a heating element.

Figure 4

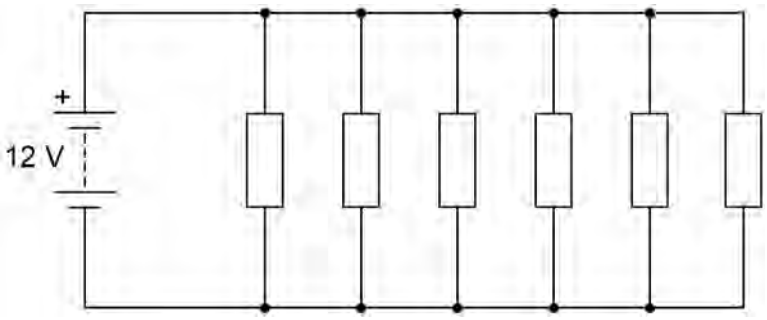

0 3 . 1 The 12 V battery supplies direct potential difference.

What is meant by 'direct potential difference'?

[1 mark]

Use the Physics Equations Sheet to answer questions **03.2** and **03.3**.

0 3 . 2 Which equation links charge flow (Q), energy (E) and potential difference (V)?

[1 mark]

Tick (✓) **one** box.

$E = \frac{V}{Q}$ ☐

$E = QV$ ☐

$E = \frac{Q}{V}$ ☐

$E = \frac{V^2}{Q}$ ☐

4.2.1.3 Current, resistance and potential difference

Question 82 · continued

0 3 . 3 Calculate the charge flow through the 12 V battery when the battery transfers 5010 J of energy.

[3 marks]

Charge flow = _____ C

0 3 . 4 Ice forms on the windscreen at a temperature of 0 °C.

The electrical circuit transfers 5010 J of energy to the ice.

A mass of 0.015 kg of ice melts.

Calculate the specific latent heat of fusion of water.

Use the Physics Equations Sheet.

[3 marks]

Specific latent heat of fusion of water = _____ J/kg

4.2.1.3 Current, resistance and potential difference

Question 82 · continued

0 3 . 5 The electrical circuit was left switched on while the ice changed from a solid to a liquid and increased in temperature to 5 °C.

Explain the changes in the arrangement **and** movement of the particles as the ice melted and the temperature increased to 5 °C.

[6 marks]

14

4.2.1.3 Current, resistance and potential difference

Question 83

June 2023 | 8463/1H | Original Q6

0 6 A student investigated how the current in a filament lamp varies with the potential difference across the filament lamp.

Figure 6 shows the results.

Figure 6

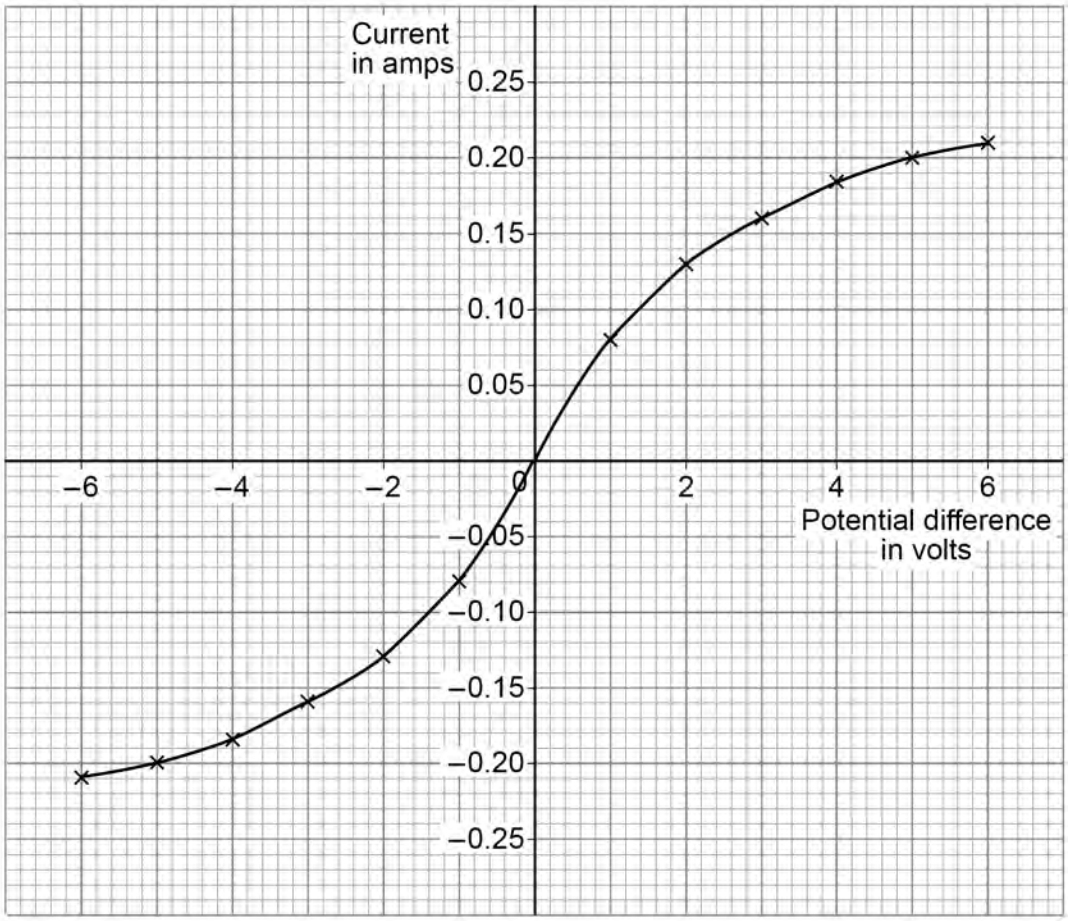

4.2.1.3 Current, resistance and potential difference

Question 83 · continued

0 6 . 1 Describe a method the student could use to obtain these results.

You should include a circuit diagram.

[6 marks]

4.2.1.3 Current, resistance and potential difference

Question 83 · continued

0 6 . 2 Determine the resistance of the filament lamp when the potential difference across it is +3.0 V.

Use the Physics Equations Sheet.

Use **Figure 6** on page 18.

[3 marks]

Resistance = _____ Ω

0 6 . 3 The current in the lamp is 0.21 A when the potential difference across the lamp is 6.0 V.

Calculate the energy transferred by the filament lamp in 30 minutes.

Use the Physics Equations Sheet.

[5 marks]

Energy transferred = _____ J

4.2.1.3 Current, resistance and potential difference

Question 83 · continued

0 6 . 4 The power output of the lamp is 1.0 W when the potential difference across the lamp is 5.0 V.

A student predicts that the power output would be 4.0 W if the potential difference was doubled.

Explain why the student is **not** correct.

[2 marks]

16

Turn over for the next question

4.2.1.3 Current, resistance and potential difference

Question 84

June 2023 | 8463/2H | Original Q9

0 9 A dynamo is used to generate an electric current.

Figure 22 shows the inside parts of the dynamo connected to a lamp.

Figure 22

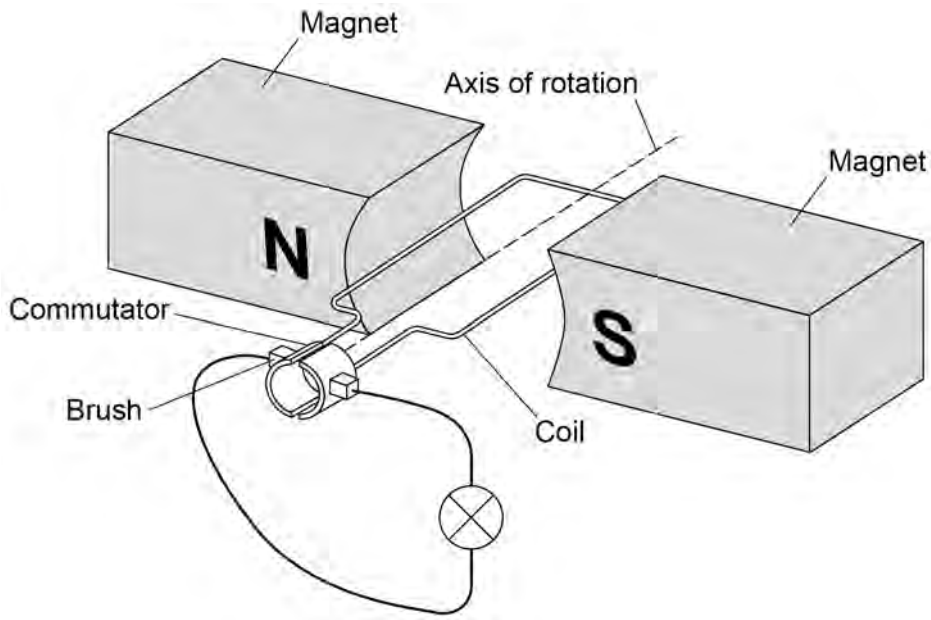

0 9 . 1 The coil is rotated.

Explain why a direct current is induced in the coil.

[5 marks]

4.2.1.3 Current, resistance and potential difference

Question 84 · continued

0 9 . 2 Sketch a graph on **Figure 23** to show how the potential difference generated across the lamp varies for **two** complete revolutions of the dynamo coil.

[1 mark]

Figure 23



0 9 . 3 The lamp is disconnected from the dynamo.

Explain why the dynamo becomes much easier to turn.

[3 marks]

9

4.2.1.3 Current, resistance and potential difference

Question 85

June 2024 | 8463/1H | Original Q3

0 3 A student investigated how the length of a wire affects the resistance of the wire at constant temperature.

Figure 3 shows the circuit used.

Figure 3

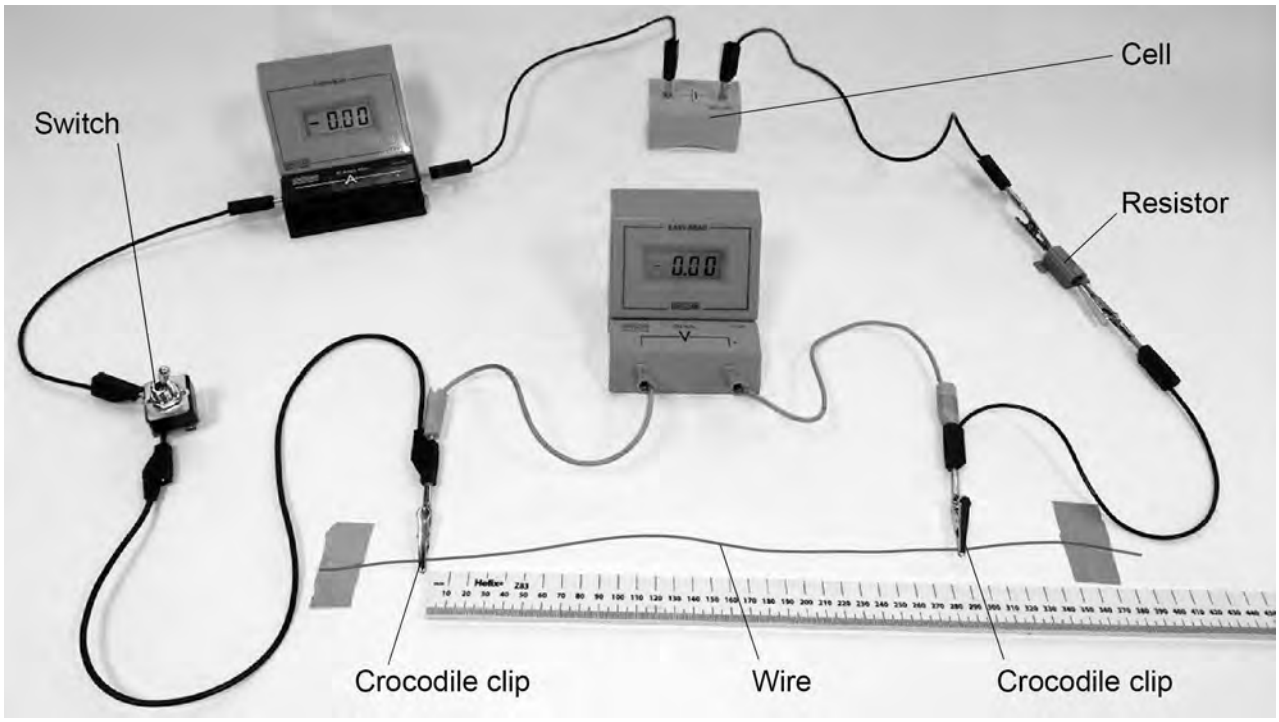

0 3 . 1 The student plotted a graph of resistance against the length of wire.

Describe a method the student could have used to collect the data needed to plot the graph.

[6 marks]

4.2.1.3 Current, resistance and potential difference

Question 85 · continued

0 3 . 2 Which graph shows the relationship between the resistance of a wire at constant temperature and its length?

[1 mark]

Tick (✓) **one** box.

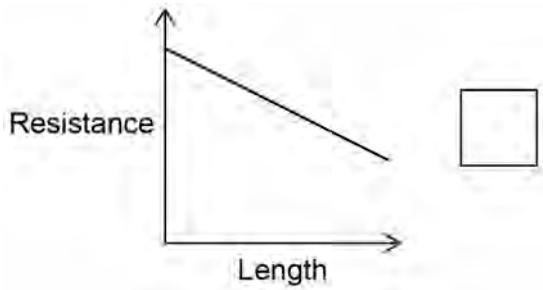

☐

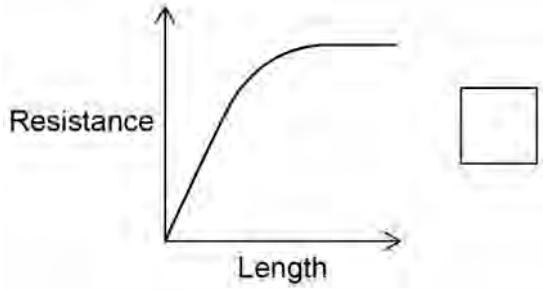

☐

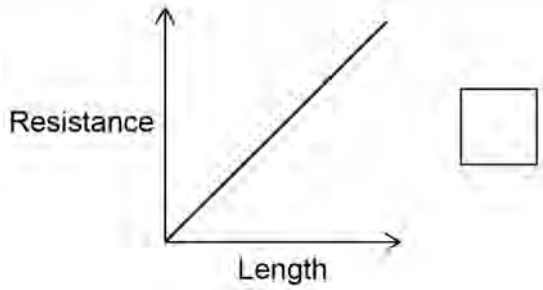

☐

Question 3 continues on the next page

4.2.1.3 Current, resistance and potential difference

Question 85 · continued

0 3 . 3 The student used a cell that had a potential difference of 1.50 V.

Explain why the cell was **not** an electrical hazard to the student in the investigation.

[2 marks]

9

4.2.1.3 Current, resistance and potential difference

Question 86

June 2024 | 8463/1H | Original Q4

0 4 **Figure 4** shows a static electricity generator.

Figure 4

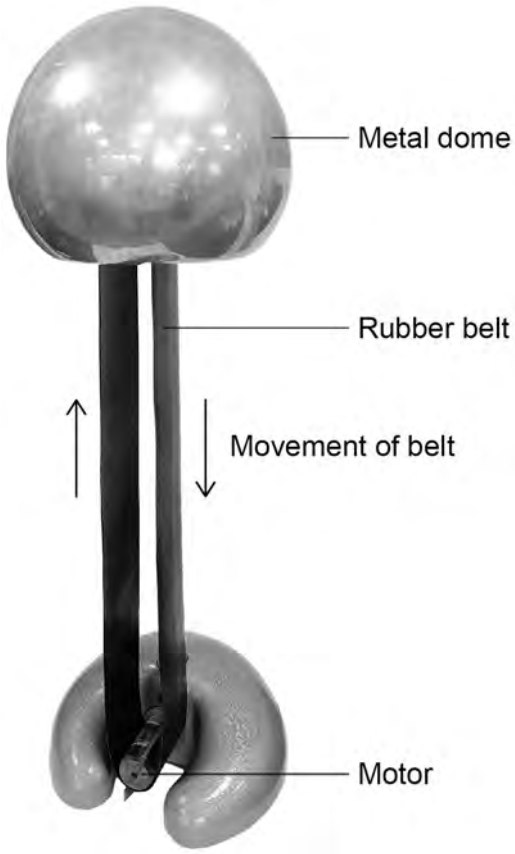

The rubber belt is turned by a motor.

As the rubber belt moves, charge is transferred from the rubber belt to the metal dome.

Question 4 continues on the next page

Question 86 · continued

0 4 . 1 **Figure 5** shows a student touching the metal dome of the static electricity generator.

The dome is negatively charged.

Figure 5



Explain why the student's hair stands up on end.

[3 marks]

4.2.1.3 Current, resistance and potential difference

Question 86 · continued

The charged metal dome creates an electric field.

0 4 . 2 What is an electric field?

[1 mark]

0 4 . 3 How does the electric field strength vary as the distance from the charged metal dome increases?

[1 mark]

Question 4 continues on the next page

4.2.1.3 Current, resistance and potential difference

Question 86 · continued

Figure 6 shows the negatively charged metal dome and an earthed conductor.

Figure 6

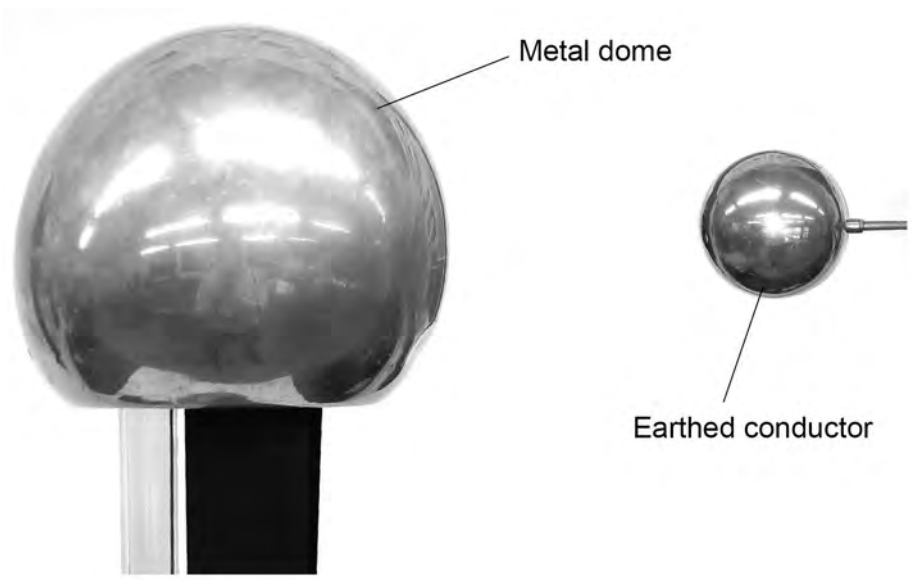

When the earthed conductor is moved towards the metal dome, there is a spark between the dome and the earthed conductor.

0 4 . 4 The spark transfers 0.60 J of energy, and 2.0 μC of charge is transferred from the dome to the earthed conductor.

Calculate the potential difference between the metal dome and the earthed conductor.

Use the Physics Equations Sheet.

[4 marks]

Potential difference = _____ V

4.2.1.3 Current, resistance and potential difference

Question 86 · continued

0 4 . 5 Which of the following changes would increase the distance a spark can jump between the dome and the earthed conductor?

[1 mark]

Tick (✓) **one** box.

- Decreased charge on the metal dome ☐
- Decreased electric field strength ☐
- Decreased electrical resistance of air ☐
- Decreased potential difference ☐

10

Turn over for the next question

4.2.1.3 Current, resistance and potential difference

Question 87

June 2024 | 8463/1H | Original Q5

0 5 **Figure 7** shows a student putting a coin into a vending machine that sells food.

Figure 7



0 5 . 1 The vending machine is connected to the mains electricity supply.

What is the frequency and the potential difference of the mains electricity supply in the UK?

[2 marks]

Frequency = _____ Hz

Potential difference = _____ V

The vending machine identifies the value of the coin by measuring the resistance of the coin.

0 5 . 2 The power dissipated by the coin is 340 mW when the current in the coin is 0.75 A.

Calculate the resistance of the coin.

Use the Physics Equations Sheet.

[4 marks]

Resistance = _____ Ω

0 5 . 3 Coins that are dirty are **not** recognised by the vending machine.

Suggest **one** reason why.

[1 mark]

Question 5 continues on the next page

4.2.1.3 Current, resistance and potential difference

Question 87 · continued

Figure 8 shows part of a different circuit that is used to monitor the temperature inside the vending machine.

Figure 8

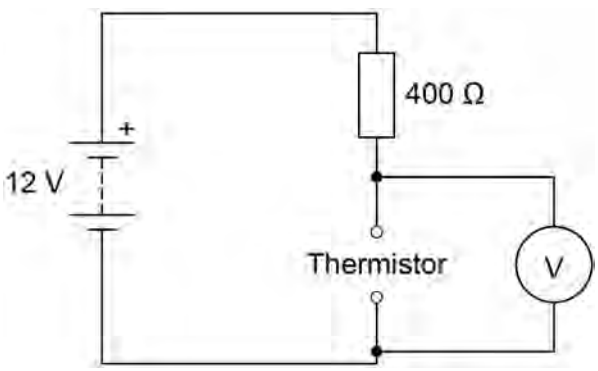

0 5 . 4 The circuit symbol for a thermistor has not been included.

Draw the circuit symbol for a thermistor in the box below.

[1 mark]

4.2.1.3 Current, resistance and potential difference

Question 87 · continued

Figure 9 shows how the resistance of the thermistor varies with temperature.

Figure 9

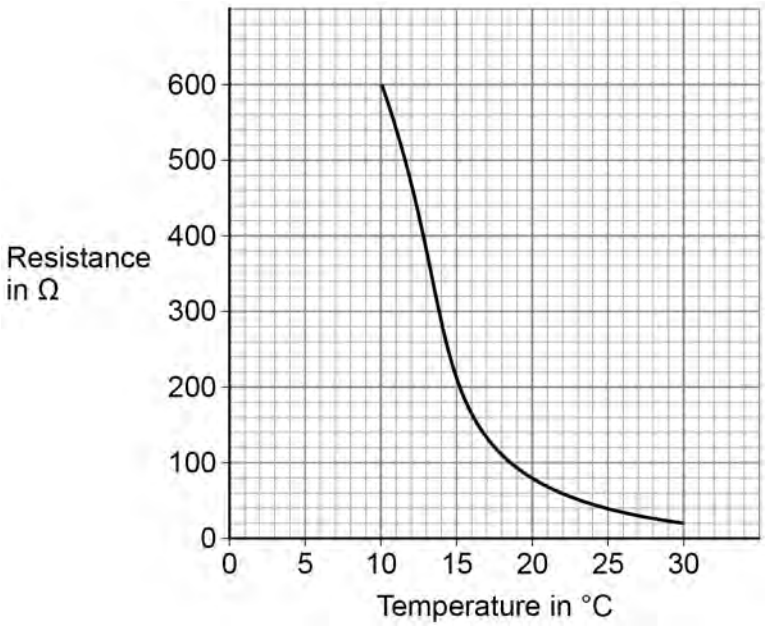

0 5 . 5 The cooling system inside the vending machine turns on when the temperature of the thermistor is above 20 °C.

Determine the potential difference across the thermistor when the temperature is 20 °C.

Use the Physics Equations Sheet.

[5 marks]

Potential difference = _____ V

13

4.2.1.3 Current, resistance and potential difference

Question 88

June 2024 | 8463/1H | Original Q10

1 0 The live wire in a three-core cable is connected to a fuse inside a plug.

A fuse contains a wire that is designed to melt when the current gets too great.

Figure 17 shows a fuse.

Figure 17

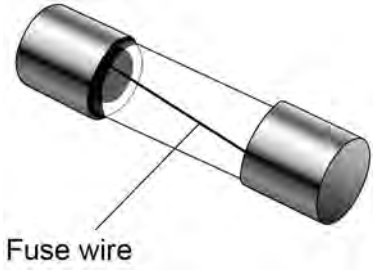

1 0 . 1 What colour is the insulation covering the live wire in a three-core cable?

[1 mark]

1 0 . 2 Draw the circuit symbol for a fuse in the box below.

[1 mark]

4.2.1.3 Current, resistance and potential difference

Question 88 · continued

10.3 The fuse wire melts when there is a charge flow of 2.0 C for 400 ms.

Calculate the current in the fuse wire.

Use the Physics Equations Sheet.

[4 marks]

Current = _____ A

10.4 When the fuse wire is at its melting point, the additional energy needed to melt the wire is 1.02 J.

specific latent heat of fuse wire = 60 kJ/kg

Calculate the mass of the fuse wire.

Use the Physics Equations Sheet.

[4 marks]

Mass = _____ kg

Question 10 continues on the next page

4.2.1.3 Current, resistance and potential difference

Question 88 · continued

10.5 The calculation in Question **10.4** assumes there is no energy transferred to the surroundings.

How would the time taken for the wire to melt be affected if some energy was transferred to the surroundings?

Give a reason for your answer.

[2 marks]

Tick (✓) **one** box.

Time taken would decrease ☐

Time taken would stay the same ☐

Time taken would increase ☐

Reason _____

_____

_____

12

4.2.1.3 Current, resistance and potential difference

Question 89

0 3 A student investigated how the current in an LED varies with the potential difference across the LED.

Figure 5 shows the circuit used.

Figure 5

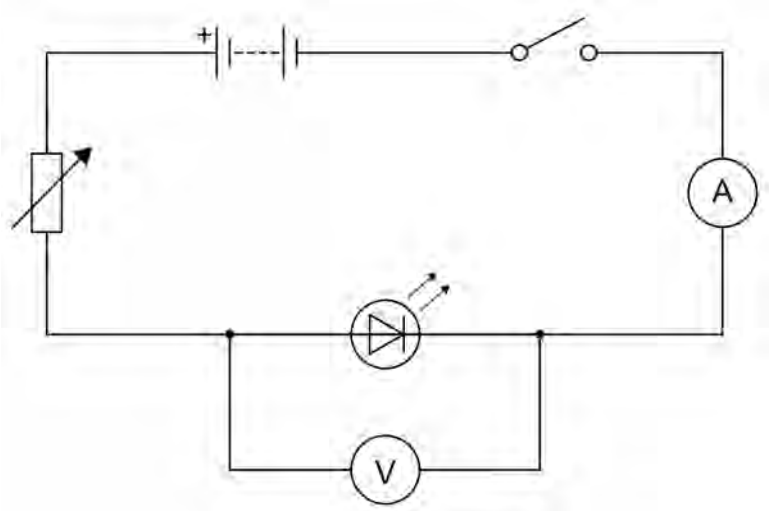

Figure 6 shows the results.

Figure 6

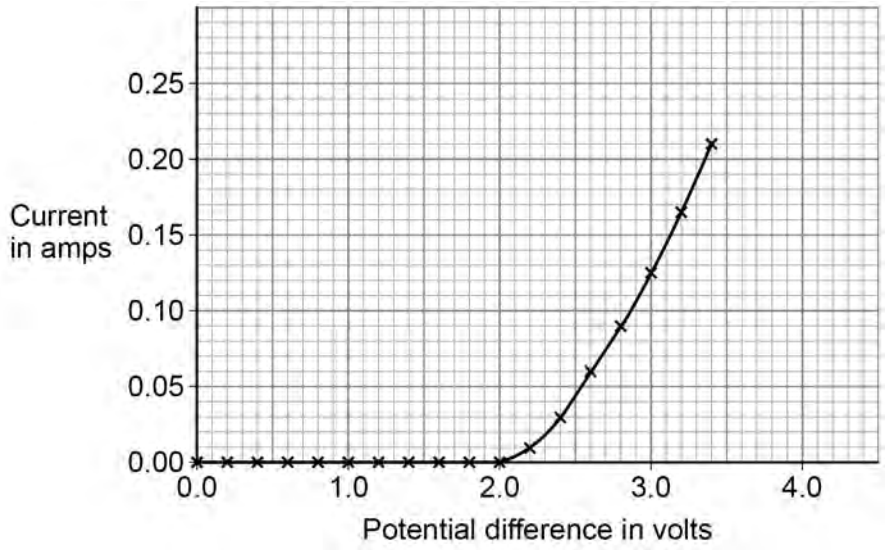

0 3 . 1 Give **one** way the student could have varied the potential difference across the LED.

[1 mark]

Question 89 · continued

Use the Physics Equations Sheet to answer questions **03.2** and **03.3**.

0 3 . 2 Which of the following equations links current (I), potential difference (V) and resistance (R)?

[1 mark]

Tick (✓) **one** box.

$V = I^2 \times R$ ☐

$V = I \times R$ ☐

$V = \frac{I}{R}$ ☐

$V = \frac{R}{I}$ ☐

0 3 . 3 Determine the resistance of the LED when the potential difference across the LED was 3.0 V.

Use **Figure 6**.

[4 marks]

Resistance = _____ Ω

Question 3 continues on the next page

4.2.1.3 Current, resistance and potential difference

Question 89 · continued

0 3 . 4 The student reversed the connections to the power supply and varied the potential difference across the LED.

Explain why the ammeter displayed a value of 0.0 A for all the values of potential difference the student used.

[2 marks]

8

4.2.1.3 Current, resistance and potential difference

Question 90

June 2025 | 8463/2H | Original Q9

0 9 Transformers are used to change alternating potential differences.

0 9 . 1 **Figure 11** shows a transformer.

Figure 11

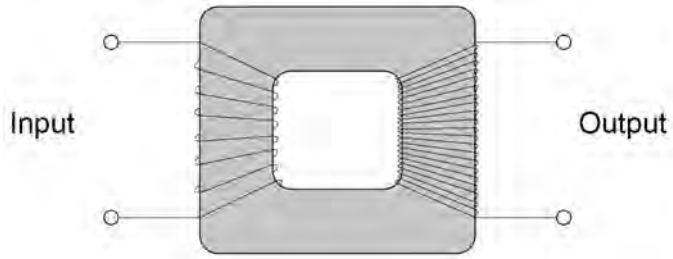

Why is the core of the transformer made from iron?

[1 mark]

Question 9 continues on the next page

4.2.1.3 Current, resistance and potential difference

Question 90 · continued

0 9 . 2 A transformer has 345 turns on the primary coil and 6000 turns on the secondary coil.

The potential difference across the secondary coil is 400 kV.

Calculate the potential difference across the primary coil.

Use the Physics Equations Sheet.

Give your answer in volts.

[4 marks]

Potential difference = _____ V

0 9 . 3 There is an alternating current in the primary coil of a transformer.

Explain why there is an alternating potential difference across the ends of the secondary coil of the transformer.

[3 marks]

8