AQA GCSE Physics | 8463

SPECIFICATION POINT 4.5.4

Moments, levers and gears (physics only)

Past-paper questions

Tier	**Foundation**
Question groups	**33**
Available paper years	**2003–2025**

Using this booklet

1. Answer the questions in order and show your working.
2. Original question numbers and marks are retained.
3. Print at actual size (100%) for measuring questions.
4. Use the companion answer booklet to check your work.

Name: _____ **Date:** _____

Whole questions are retained for context, so some parts assess other specification points. Current and legacy sources are labelled. Continue on extra paper if needed.

4.5.4 Moments, levers and gears (physics only)

Question 01

June 2003 | 3451F | Original Q17 | Legacy

17 (a) Every object has a *centre of mass*. What is meant by the *centre of mass*?

.....

.....

(1 mark)

(b) The drawing shows a thin sheet of plastic. The sheet is 250 mm wide. Two holes, each with a radius of 2 mm, have been drilled through the sheet.

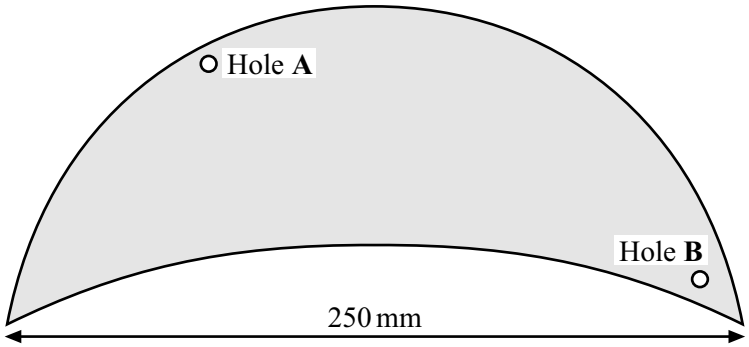

Describe how you could use:

- a clamp and stand
- a steel rod 100 mm long and with a radius of 1 mm
- a weight on a thin piece of string (= a plumb line)
- a ruler
- a pen which will write on the plastic sheet

to find the centre of mass of the plastic sheet.

To gain full marks in this question you should write your ideas in good English. Put them into a sensible order and use the correct scientific words.

.....

.....

.....

.....

.....

.....

.....

.....

.....

.....

(5 marks)

4.5.4 Moments, levers and gears (physics only)

Question 01 · continued

MARGIN
BLANK

(c) There is a trapdoor in the ceiling of a house.
The trapdoor weighs 44 N.
The drawing shows a side view of the trapdoor.

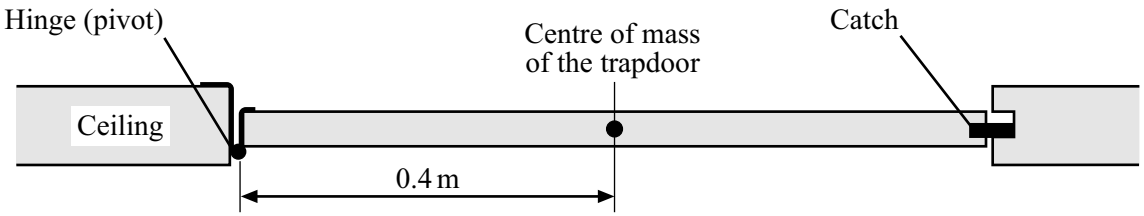

(i) Complete the **three** spaces to give the equation which is used to calculate the turning effect of a force.

..... = ... × perpendicular..... between line of action and pivot

(1 mark)

(ii) Calculate the turning effect, about the hinge, due to the weight of the trapdoor.

Show clearly how you work out your final answer and give the unit.

.....

.....

Turning effect = ...

(3 marks)

10

4.5.4 Moments, levers and gears (physics only)

Question 02

June 2005 | 3451 | Original Q16 | Legacy

16 (a) The diagram shows a lifebelt. It is hanging freely from hook **Y**.

(i) On the diagram, mark with an **X** the point where you think the centre of mass of the lifebelt will be.

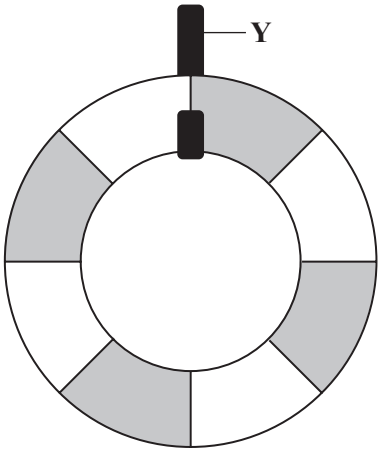

(1 mark)

(ii) Explain why you have chosen this point.

.....

.....

.....

(2 marks)

(b) The drawing shows Susan on a diving board. She is 1.5 metres from point **P** and she weighs 500 N.

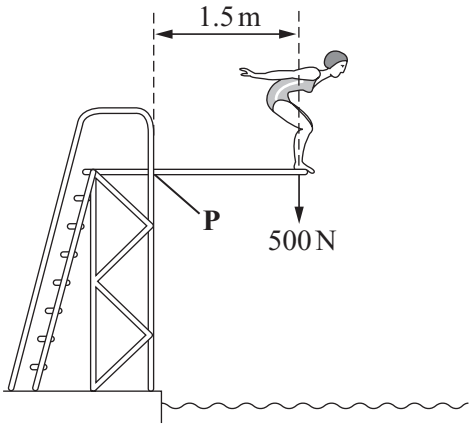

Calculate her moment (turning effect) about point **P**.
Show clearly how you work out your answer and give the unit.

.....

.....

Moment about **P** = ...

4.5.4 Moments, levers and gears (physics only)

Question 02 · continued

MARGIN BLANK

(c) Susan has a case with wheels.



When she packs this case, she puts the heaviest items at the end where the wheels are.
This means that the heaviest items are less likely to crush the other contents and it helps her to find things when she opens the case.

Explain another advantage of packing her case in this way.

To gain full marks in this question you should write your ideas in good English. Put them into a sensible order and use the correct scientific words.

.....

.....

.....

.....

.....

.....

.....

.....

(4 marks)

10

TURN OVER FOR THE NEXT QUESTION

4.5.4 Moments, levers and gears (physics only)

Question 03

June 2006 | 3451 | Original Q11 | Legacy

11 (a) The diagram shows an overhead view of an athlete who is about to throw a hammer.
The hammer is a metal mass joined to a strong wire.
The athlete swings the mass round in a circular path.

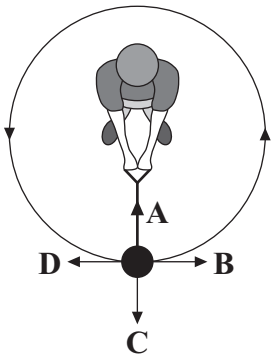

(i) In which direction, **A**, **B**, **C** or **D**, does the centripetal force act? .....
(1 mark)

(ii) The athlete lets go of the wire.
In which direction, **A**, **B**, **C** or **D**, does the mass move? .....
(1 mark)

(iii) Complete the sentences by ticking (✓) the correct ending.

When the mass moves in a circle at a steady speed the centripetal force is larger

if the

mass is larger	
mass is smaller	
speed decreases	
weight is smaller	

.

(1 mark)

When the mass moves in a circle at a steady speed the centripetal force is larger

if the

speed decreases	
weight is smaller	
wire is longer	
wire is shorter	

.

(1 mark)

(b) The following equation is used to calculate the turning effect of a force.

Choose **two** words from the box to complete the equation.

distance	**energy**	**mass**	**moment**	**weight**

..... = force × perpendicular ..... between line of action and pivot.
(2 marks)

(c) A student investigates turning effects.
The equipment she uses is shown below.

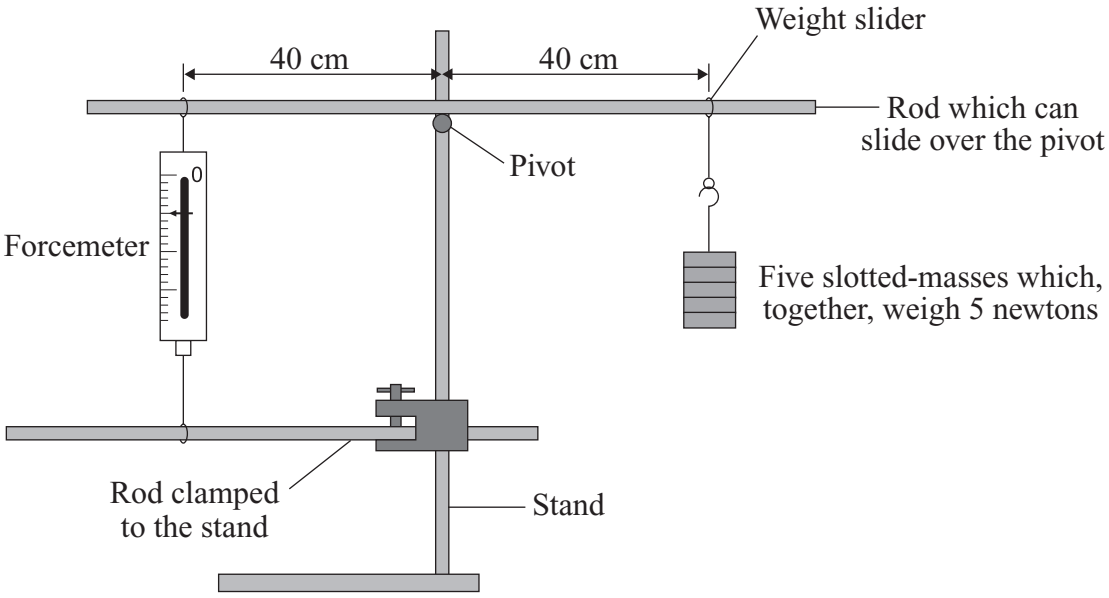

(i) What is the weight, in newtons, of each of the slotted masses? ..... N
(1 mark)

(ii) What will the reading be, in newtons, on the forcemeter? ..... N
(1 mark)

(iii) Briefly describe **two** different ways to adjust the apparatus so that the reading on the forcemeter is **less** than the weight of the slotted masses.

1.....

.....

2.....

.....
(2 marks)

(d) The diagrams show three thin sheets of plastic.
Label the centre of mass of each sheet with an **X**.

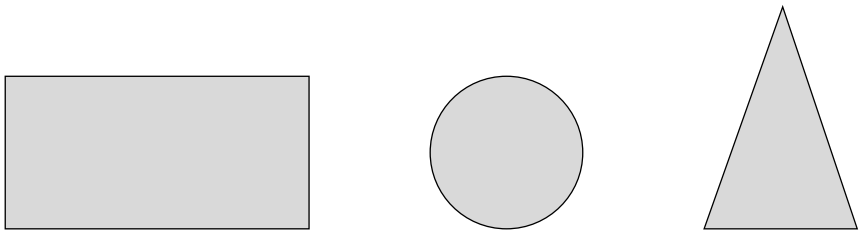

(3 marks)

13

4.5.4 Moments, levers and gears (physics only)

Question 04

June 2006 | 3451 | Original Q15 | Legacy

15 (a) The table shows how the stopping distance of a car, in metres (m), depends on the speed of the car, in miles per hour (mph).

Speed (mph)	20	30	40	50	60	70
Stopping distance (m)	12	23	36	53	73	96

(i) Draw a graph of stopping distance against speed.

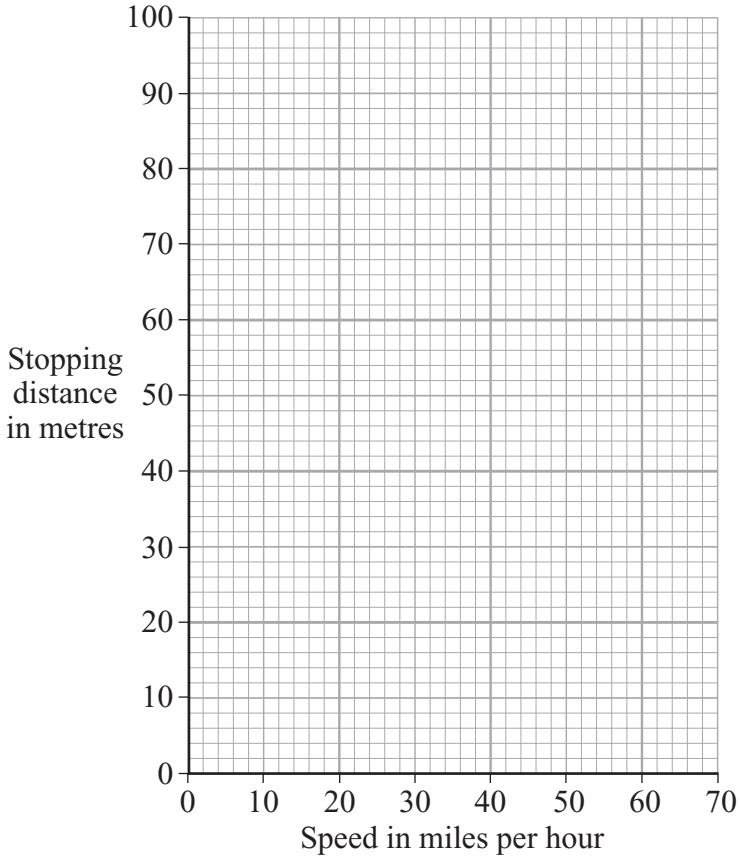

(3 marks)

(ii) The speed limit outside a school is 20 mph.

Use the graph to estimate **how much further** a car will travel before it stops when driven at 25 mph instead of 20 mph.

Show clearly how you work out your answer.

.....

.....

(2 marks)

Question 15 continues on the next page

Question 04 · continued

BLANK

(b) A child ran out in front of a car causing the driver to make an emergency stop. The graph shows how the speed of the car changed from the moment the driver saw the child.

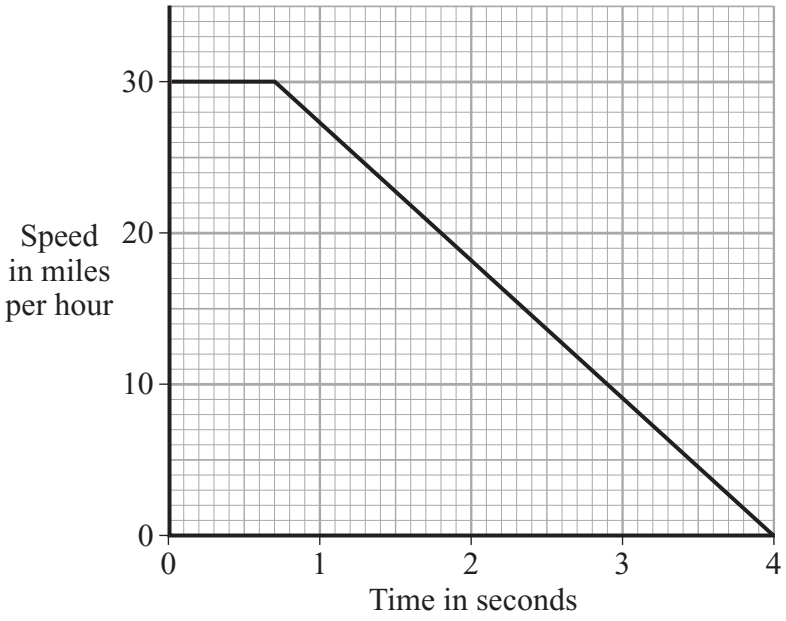

(i) What was the driver's reaction time?

.....

(1 mark)

(ii) Describe the motion of the car during the first 0.5 seconds.

.....

(1 mark)

(iii) How long did it take the car to stop once the brakes were applied?

.....

(1 mark)

(iv) The drug cannabis makes the reactions of a person slower.

Explain how the stopping distance of the car would change if the driver had been smoking cannabis.

.....

.....

.....

.....

(2 marks)

Question 04 · continued

BLANK

(c) The diagram shows how far a dummy in a car crash test moves before it is stopped by the seat belt. The graph shows the force exerted by the seat belt on the dummy during the crash.

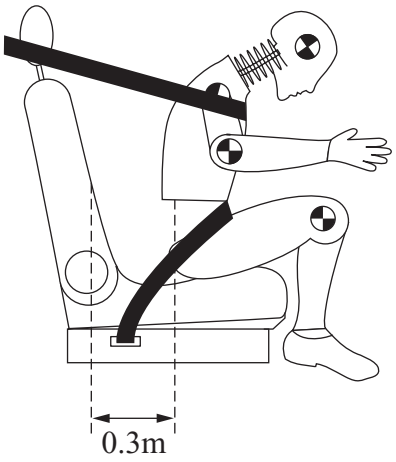

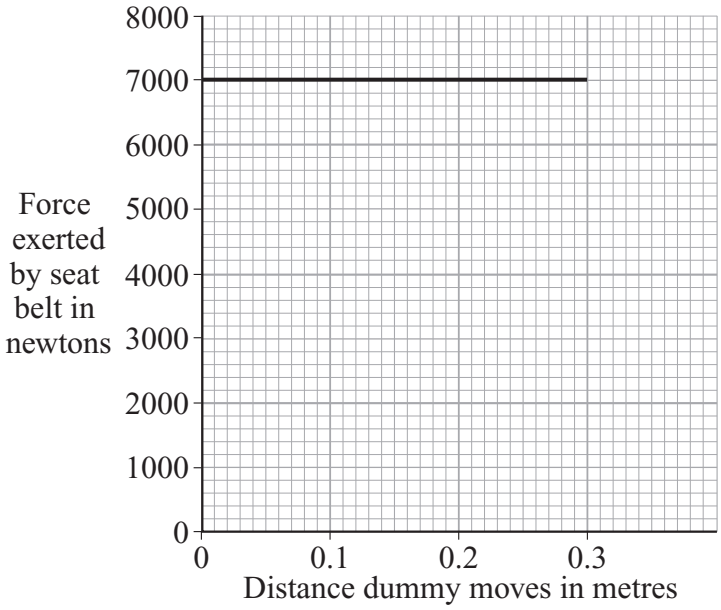

(i) Write down the equation that links distance moved, force applied and work done.

.....

(1 mark)

(ii) Calculate the work done to stop the dummy.

Show clearly how you work out your answer.

.....

.....

.....

Work done = ... joules

(2 marks)

(iii) How much energy is transferred from the dummy during the crash?

.....

(1 mark)

14

4.5.4 Moments, levers and gears (physics only)

Question 05

June 2006 | 3462 | Original Q13 | Legacy

13 (a) The table shows how the stopping distance of a car, in metres (m), depends on the speed of the car, in miles per hour (mph).

Speed (mph)	20	30	40	50	60	70
Stopping distance (m)	12	23	36	53	73	96

(i) Draw a graph of stopping distance against speed.

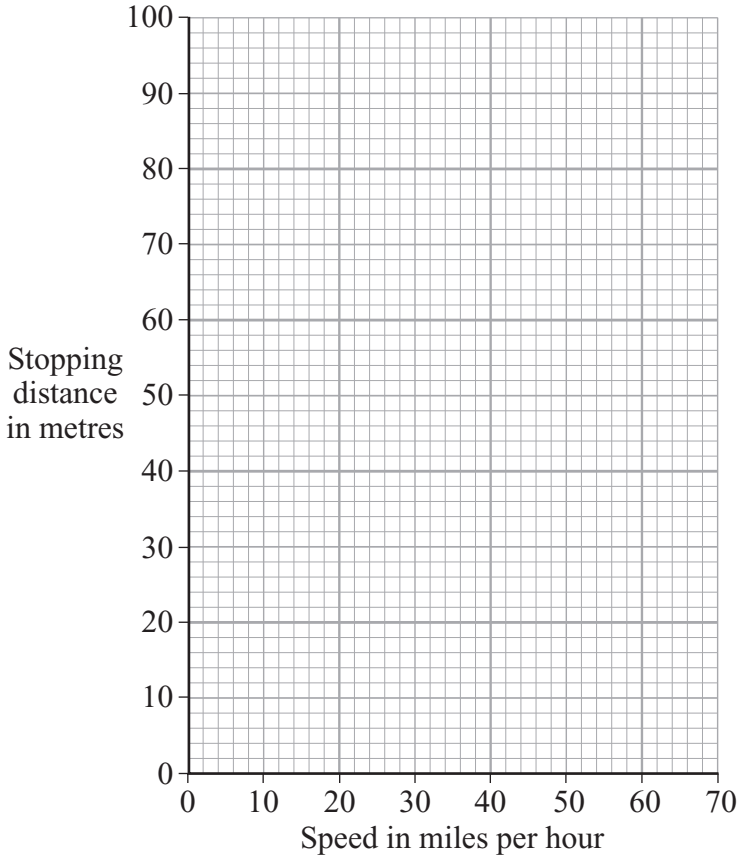

(3 marks)

(ii) The speed limit outside a school is 20 mph.

Use the graph to estimate **how much further** a car will travel before it stops when driven at 25 mph instead of 20 mph.

Show clearly how you work out your answer.

.....

.....

(2 marks)

Question 13 continues on the next page

Question 05 · continued

BLANK

(b) A child ran out in front of a car causing the driver to make an emergency stop. The graph shows how the speed of the car changed from the moment the driver saw the child.

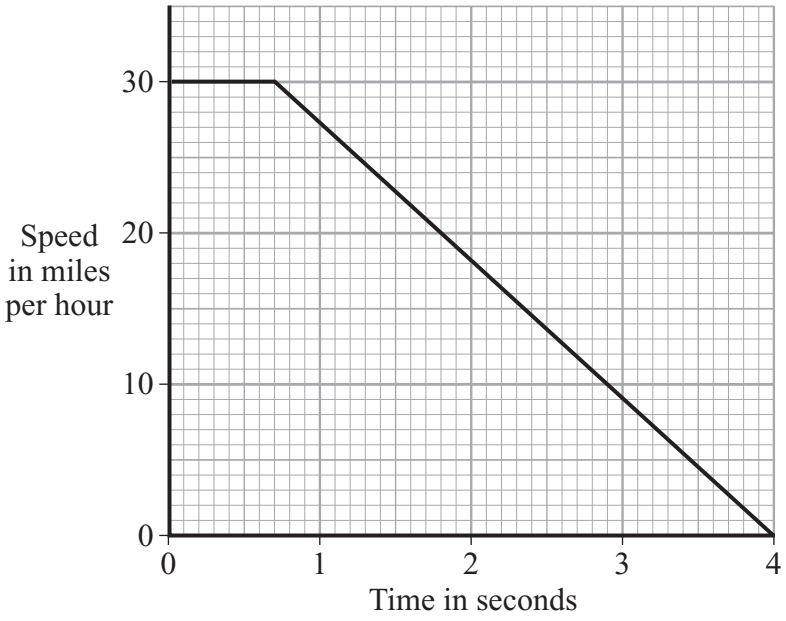

(i) What was the driver's reaction time?

.....

(1 mark)

(ii) Describe the motion of the car during the first 0.5 seconds.

.....

(1 mark)

(iii) How long did it take the car to stop once the brakes were applied?

.....

(1 mark)

(iv) The drug cannabis makes the reactions of a person slower.

Explain how the stopping distance of the car would change if the driver had been smoking cannabis.

.....

.....

.....

.....

(2 marks)

Question 05 · continued

BLANK

(c) The diagram shows how far a dummy in a car crash test moves before it is stopped by the seat belt. The graph shows the force exerted by the seat belt on the dummy during the crash.

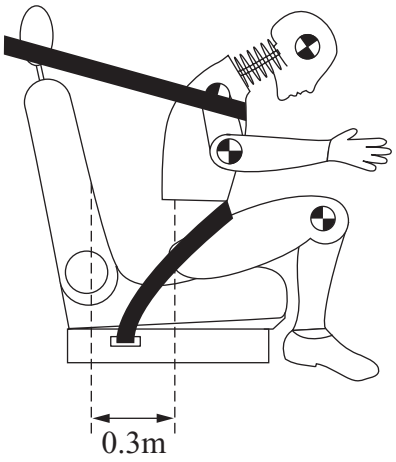

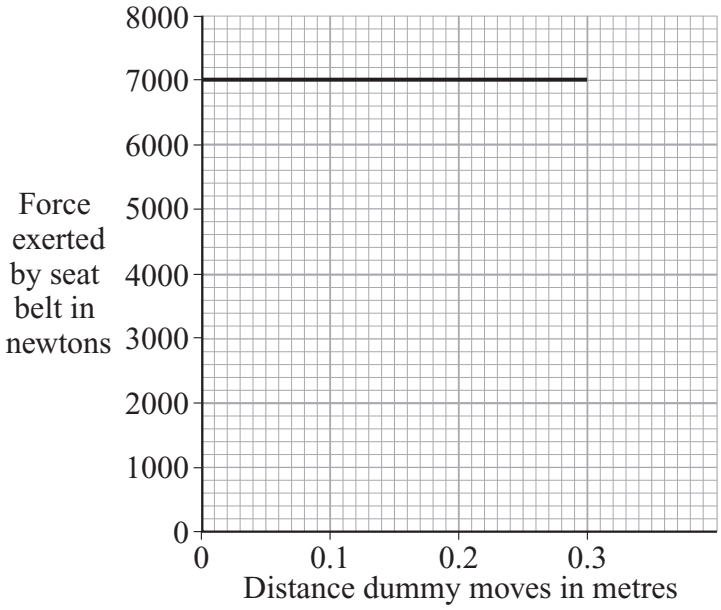

(i) Write down the equation that links distance moved, force applied and work done.

.....

(1 mark)

(ii) Calculate the work done to stop the dummy.

Show clearly how you work out your answer.

.....

.....

.....

Work done = ... joules

(2 marks)

(iii) How much energy is transferred from the dummy during the crash?

.....

(1 mark)

14

4.5.4 Moments, levers and gears (physics only)

Question 06

4 Light is given out by the Sun and a distant galaxy.

(a) Compared to the light from the Sun, the light from the distant galaxy has moved towards the red end of the spectrum.

(i) What name is given to this effect?

.....

(1 mark)

(ii) Complete the following sentence by drawing a ring around the line in the box that is correct.

The fact that light from a distant galaxy seems to move towards the red end of the spectrum gives scientists evidence that

galaxies are shrinking
galaxies are changing colour
the universe is expanding

.

(1 mark)

(b) Scientists have a theory that the universe began from a very small point and then exploded outwards.

(i) What name is given to this theory?

.....

(1 mark)

(ii) Which statement gives a reason why scientists think that the universe began with an explosion?

Put a tick (✓) in the box next to your choice.

At the moment it is the best way of explaining our scientific knowledge. ☐

It can be proved using equations. ☐

People felt the explosion. ☐

(1 mark)

4.5.4 Moments, levers and gears (physics only)

Question 06 · continued

BLANK

(c) Scientists use various types of telescope to obtain data from our solar system and beyond.

(i) What type of electromagnetic radiation is detected using an optical telescope?

.....

(1 mark)

(ii) The image from a telescope orbiting in space is usually clearer than the image from a telescope on the Earth.

Which statement gives a reason for this? Put a tick (✓) in the box next to your choice.

A space telescope is bigger. ☐

A space telescope is closer to the stars. ☐

The atmosphere does not block the light to a space telescope. ☐

(1 mark)

(iii) Give **one** disadvantage of having a telescope in space.

.....

.....

(1 mark)

7

4.5.4 Moments, levers and gears (physics only)

Question 07

January 2008 | PHY3F | Original Q8 | Legacy

8 A spanner gives a turning effect to undo a nut.

(a) Complete the sentence.

The turning effect of a force is called the ..... of the force.
(1 mark)

(b) The diagram shows a spanner being used.

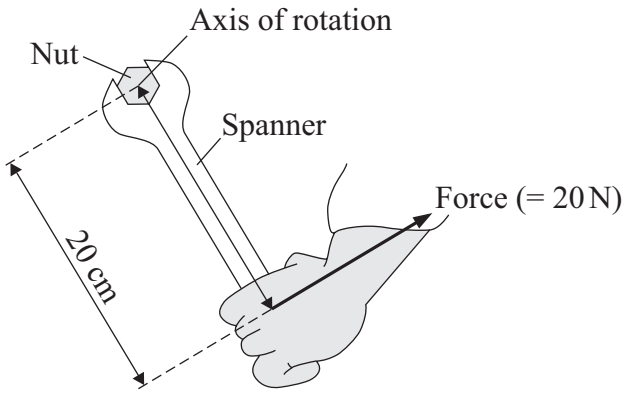

Use the equation in the box to calculate the spanner's turning effect in newton metres.

turning effect = force × perpendicular distance from the line of action of the force to the axis of rotation

Show clearly how you work out your answer.

.....

.....

Turning effect = ... Nm
(2 marks)

(c) Give **two** ways in which you can increase the spanner's turning effect.

1 .....

2 .....
(2 marks)

5

4.5.4 Moments, levers and gears (physics only)

Question 08

June 2008 | PHY3F | Original Q5 | Legacy

5 A girl and her father visit a children's playground.

5 (a) The diagram shows the girl holding on to a roundabout which is turning.

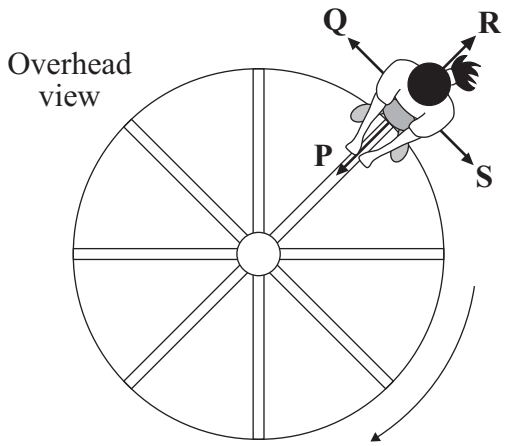

A centripetal force must act because the girl moves in a circular path.

5 (a) (i) In which direction, **P**, **Q**, **R** or **S**, does the centripetal force act?

Direction ..... *(1 mark)*

5 (a) (ii) What provides this centripetal force?

.....

.....

(1 mark)

5 (a) (iii) Her father pushes the roundabout so that it turns faster. The girl continues to stand on the same part of the roundabout.

Complete the following sentence by drawing a ring around the correct line in the box.

The centripetal force on the girl

decreases
does not change
increases

.

(1 mark)

Question 5 continues on the next page

4.5.4 Moments, levers and gears (physics only)

Question 08 · continued

for mark

5 (b) The diagram shows the girl and her father on a see-saw.

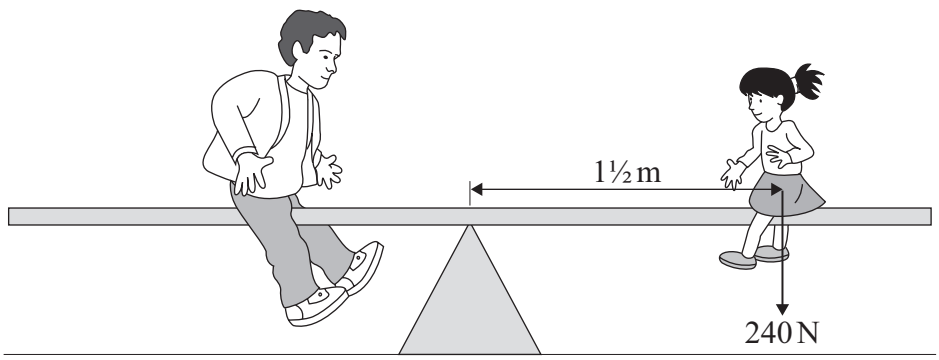

5 (b) (i) Use the equation in the box to calculate the moment of the girl.

moment	= force ×	perpendicular distance from the line of action of the force to the axis of rotation	

Show clearly how you work out your answer.

.....

.....

Moment of the girl = ... Nm

(2 marks)

5 (b) (ii) What must her father do to increase his moment?

.....

.....

(1 mark)

4.5.4 Moments, levers and gears (physics only)

Question 08 · continued

for mark

5 (c) The diagram shows part of a level road that they take when they drive home. They drive at a steady speed.

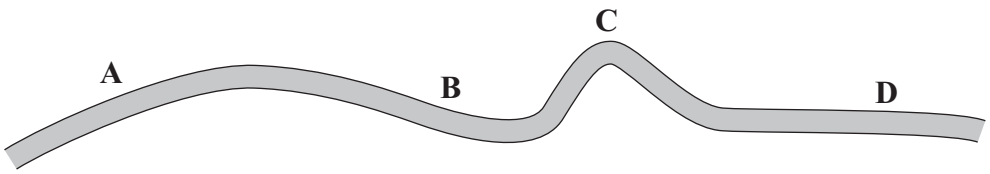

5 (c) (i) At which point, **A**, **B**, **C** or **D**, will the centripetal force on the car be greatest?

Centripetal force is greatest at ..... .

(1 mark)

5 (c) (ii) What provides the centripetal force when the car goes round a bend?

.....

.....

(1 mark)

8

4.5.4 Moments, levers and gears (physics only)

Question 09

June 2009 | PHY3F | Original Q1 | Legacy

1 The drawing shows a sign which hangs outside a shop.

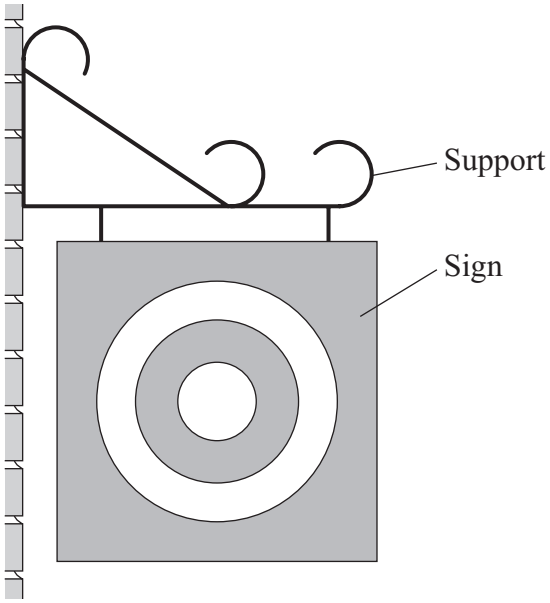

1 (a) Draw an **X** on the sign so that the centre of your **X** is at the centre of mass of the sign.

(1 mark)

1 (b) Use a ruler to draw **one** axis of symmetry on the sign.

(1 mark)

1 (c) One force which acts on the sign is its weight.

Complete the following sentence by drawing a ring around the correct line in the box.

The moment of the weight produces

an accelerating
a balancing
a turning

effect.

(1 mark)

3

4.5.4 Moments, levers and gears (physics only)

Question 10

2 The diagram shows how a student can find the centre of mass of a thin flat sheet of plastic.

Part of his equipment is a plumb line. This is a weight fastened to one end of a piece of string.

He hangs the sheet and the plumb line from a pin through hole **A**.

2 (a) Mark an **X** on the diagram so that the centre of the **X** marks the likely position of the centre of mass of the plastic sheet.

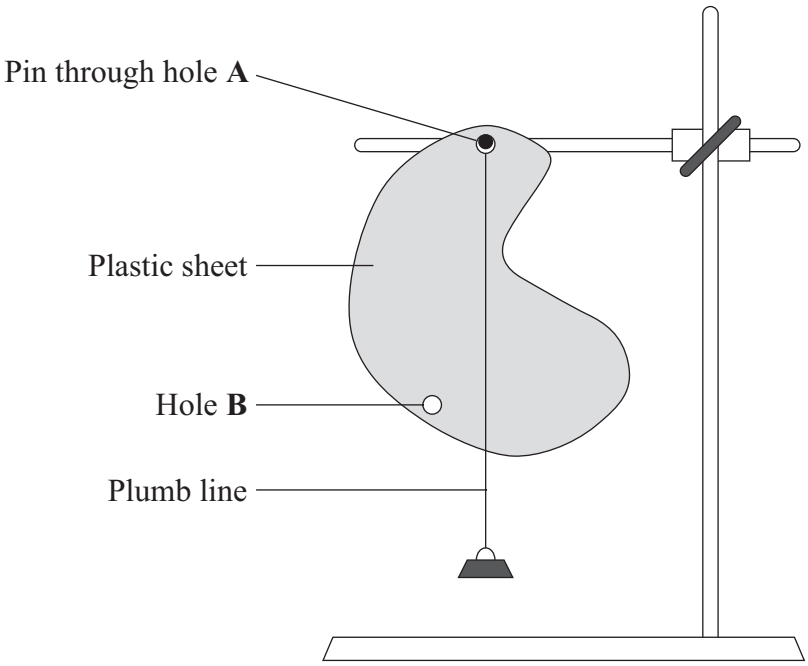

(1 mark)

4.5.4 Moments, levers and gears (physics only)

Question 10 · continued

for mark

2 (b) The dashed lines on the diagram below show the position of the plumb line from each hole when the student uses a different plastic sheet.

Point **P** is on both the dashed lines.

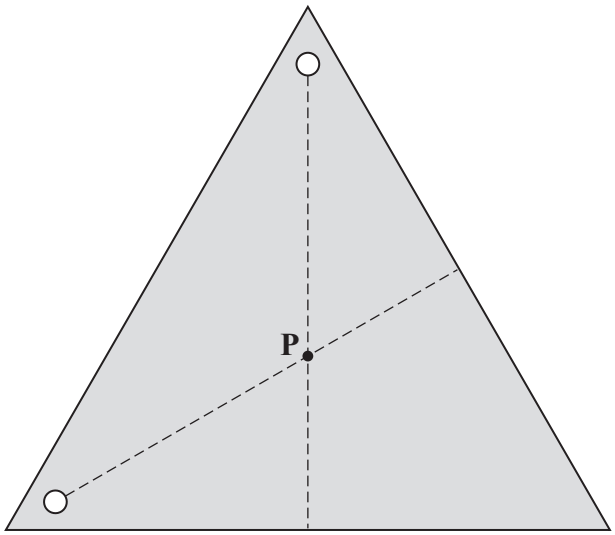

Complete the following sentence by drawing a ring around the correct line in the box.

Point **P** shows the

axis
centre of mass
moment
symmetry

of the plastic sheet.

(1 mark)

2 (c) Complete the following sentence by drawing a ring around the correct word in the box.

A plumb line always hangs so that it is

curved
horizontal
parallel
vertical

.

(1 mark)

3

4.5.4 Moments, levers and gears (physics only)

Question 11

June 2010 | PHY1F | Original Q3 | Legacy

3 (a) The diagram shows two switches on a room heater. The heater has three power settings. The power produced by two of the settings is given in the table.

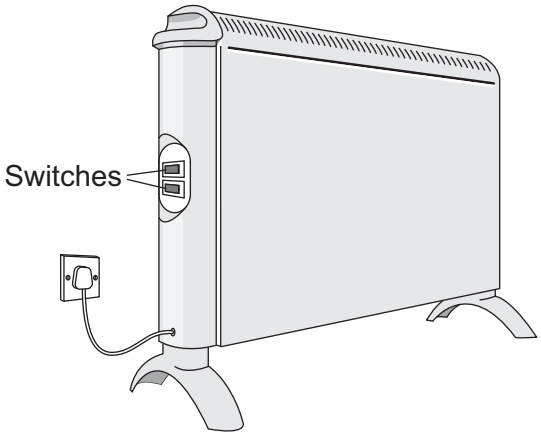

Setting	Power in kW
Low	0.5
Medium	1.5
High	

3 (a) (i) When both switches are on, the heater works at the high power setting.

What is the power of the heater when it is switched to the **high** power setting?

.....

Power = ... kW

(1 mark)

3 (a) (ii) The heater is used on the **medium** power setting. It is switched on for three hours.

Use the equation in the box to work out the energy transferred from the mains to the heater in three hours.

energy transferred (kilowatt-hour, kWh)	=	power (kilowatt, kW)	×	time (hour, h)

Show clearly how you work out your answer.

.....

.....

Energy transferred = ... kWh

(2 marks)

3 (a) (iii) Electricity costs 12 pence per kilowatt-hour.

Use the equation in the box to calculate how much the heater costs to use on **medium** power for three hours.

total cost = number of kilowatt-hours × cost per kilowatt-hour

Show clearly how you work out your answer.

.....

.....

Total cost = ... pence
(2 marks)

Question 3 continues on the next page

4.5.4 Moments, levers and gears (physics only)

Question 11 · continued

3 (b) The heater is used to warm a room.

The graph shows how the temperature of the room changes from the moment the heater is switched on.

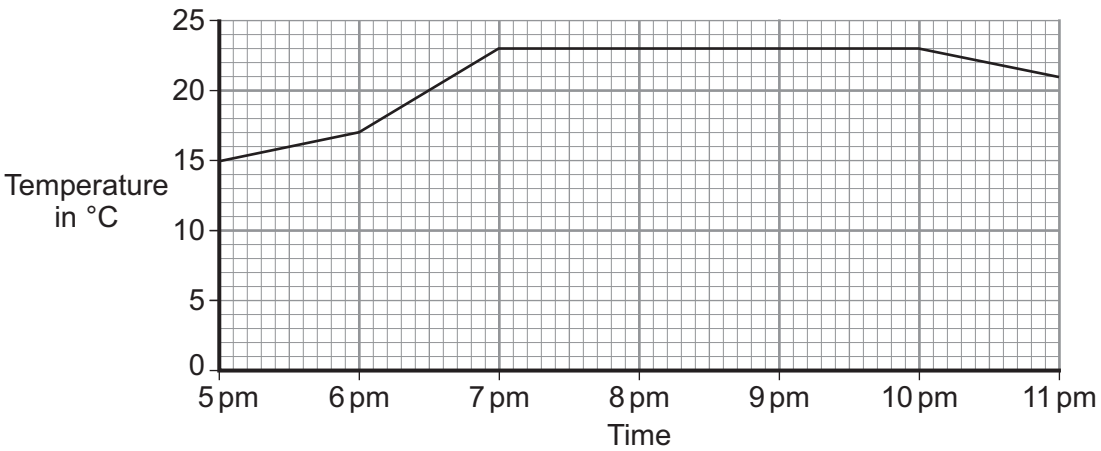

The heater was first used on the medium setting.

3 (b) (i) At what time was the heater setting changed to the **high** setting?

.....

Give a reason for your answer.

.....

.....

.....

(2 marks)

3 (b) (ii) From 7 pm until 10 pm, the temperature of the room is **not** changing.

Which **one** of the following statements gives the reason why the temperature of the room is **not** changing?

Put a tick (✓) in the box next to your answer.

The room is losing energy slower than the heater supplies energy. ☐

The room is losing energy as fast as the heater supplies energy. ☐

The room is losing energy faster than the heater supplies energy. ☐

(1 mark)

8

4.5.4 Moments, levers and gears (physics only)

Question 12

1 Two children visit a playground.

1 (a) The diagram shows them on a see-saw. The see-saw is balanced.

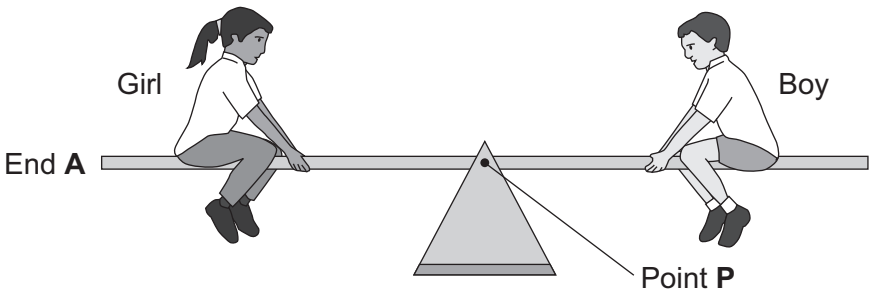

Complete the following sentences by drawing a ring around the correct word or line in the box.

1 (a) (i) The turning effect of the girl's weight is called her

force.
load.
moment.

(1 mark)

1 (a) (ii) Point **P** is the axis of

balance
rotation
turning

of the see-saw.

(1 mark)

1 (a) (iii) To make end **A** of the see-saw go up,

the boy moves nearer to point **P**.
the girl moves nearer to point **P**.
the girl moves nearer to end **A**.

(1 mark)

4.5.4 Moments, levers and gears (physics only)

Question 12 · continued

1 (b) In another part of the playground, a tyre has been suspended from a bar.

1 (b) (i) Draw an **X** on the diagram so that the centre of the **X** marks the centre of mass of the tyre.

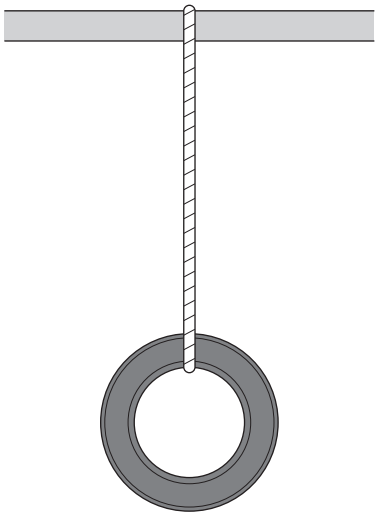

(1 mark)

1 (b) (ii) Complete the sentence by using the correct word or phrase from the box.

above	**below**	**to the left of**	**to the right of**

If the suspended tyre is pushed, it will come to rest with its centre of mass directly ..... the point of suspension.

(1 mark)

5

4.5.4 Moments, levers and gears (physics only)

Question 13

January 2011 | PHY1F | Original Q5 | Legacy

5 The diagram shows a small-scale, *micro-hydroelectricity* generator which uses the energy of falling river water to generate electricity. The water causes a device, called an Archimedean screw, to rotate.
The Archimedean screw is linked to the generator by a gearbox.

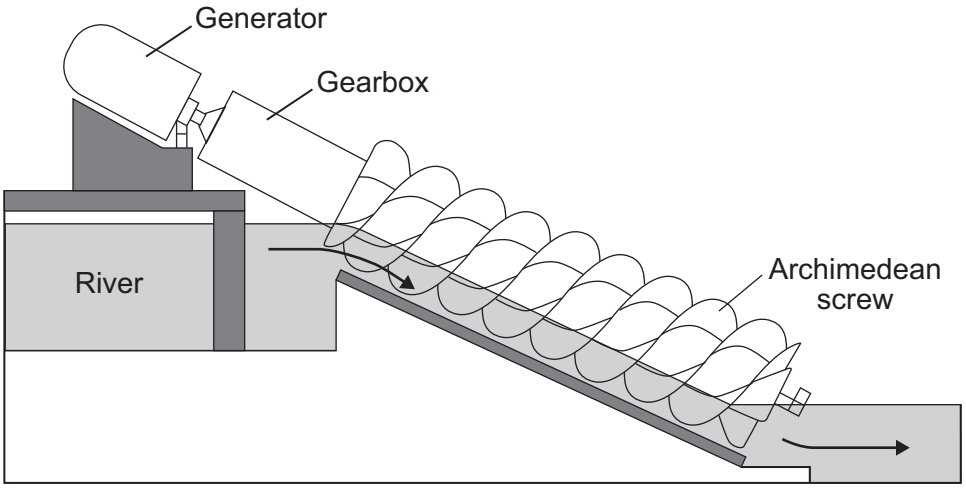

5 (a) Complete the following sentence by drawing a ring around the correct word in the box.

The gravitational potential energy of the falling water is transformed

into the

chemical
electrical
kinetic

energy of the Archimedean screw.

(1 mark)

5 (b) A micro-hydroelectric generator is very efficient. Most of the input energy from the falling water is transformed into useful electrical energy.

Which **one** of the following Sankey diagrams, **X**, **Y** or **Z**, shows the energy transformations produced by this generator?

Write your answer, **X**, **Y**, or **Z**, in the box.

Sankey diagram **X**

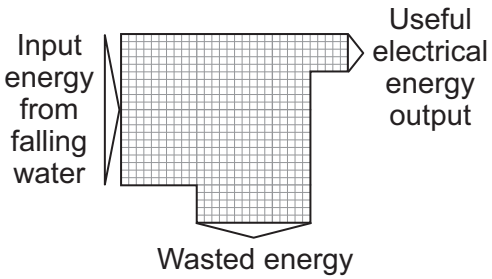

Sankey diagram **Y**

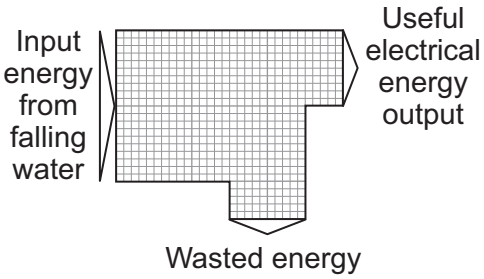

Sankey diagram **Z**

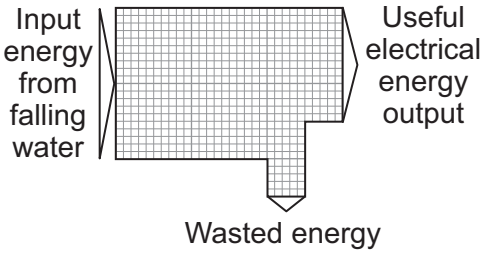

Sankey diagram ☐

(1 mark)

Question 5 continues on the next page

Question 13 · continued

5 (c) A micro-hydroelectric system generates about 60 kW of electricity, enough for 50 homes. A conventional large-scale hydroelectric power station may generate more than 5 000 000 kW of electricity.

5 (c) (i) Give **one** advantage of a conventional large-scale hydroelectric power station compared to a micro-hydroelectric system.

.....

.....

(1 mark)

5 (c) (ii) Which **one** of the following statements gives a **disadvantage** of a conventional large-scale hydroelectric power station compared to a micro-hydroelectric system?

Put a tick (✓) in the box next to your answer.

Energy is wasted as heat and sound. ☐

Large areas of land are flooded. ☐

A constant flow of water is needed. ☐

(1 mark)

5 (d) The electricity generated by the micro-hydroelectric system is transferred directly to local homes. The electricity generated by a conventional large-scale hydroelectric power station is transferred to homes anywhere in the country through a system of cables and transformers.

5 (d) (i) What name is given to the system of cables and transformers used to transfer electricity to homes anywhere in the country?

.....

(1 mark)

5 (d) (ii) Using short cables to transfer electricity to local homes is much more efficient than using very long cables to transfer electricity to homes anywhere in the country.

Why?

.....

.....

(1 mark)

4.5.4 Moments, levers and gears (physics only)

Question 13 · continued

5 (e) Nepal is a mountainous country with over 6000 rivers. In Nepal, 9000 kW of electricity are generated using micro-hydroelectric generators.

Suggest **one** reason why in the UK much less electricity is generated using micro-hydroelectric generators, than in Nepal.

.....

.....

(1 mark)

7

Turn over for the next question

4.5.4 Moments, levers and gears (physics only)

Question 14

January 2011 | PHY3F | Original Q3 | Legacy

3 (a) A student holds a ruler at one end and slides a weight along the ruler.

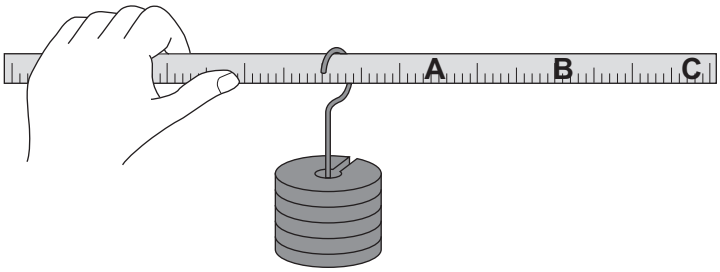

At which point, **A**, **B** or **C**, will the turning effect of the weight feel greatest?

Write your answer, **A**, **B** or **C**, in the box. Point ☐

(1 mark)

3 (b) Complete the following sentence by drawing a ring around the correct word in the box.

The turning effect of a force is called the | axis | equilibrium | moment | of the force.

(1 mark)

3 (c) In a human arm, the biceps muscle provides the force needed to hold the arm horizontal. A student uses a model in which a rubber band represents the biceps muscle.

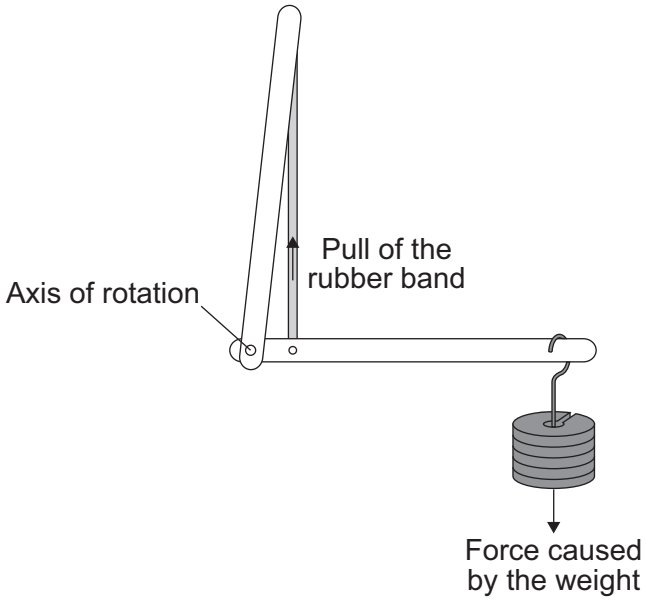

4.5.4 Moments, levers and gears (physics only)

Question 14 · continued

Complete the following sentence by drawing a ring around the correct line in the box.

To hold the model arm horizontal, the pull from the rubber band will be

bigger than
smaller than
the same as

the force caused by the weight.

(1 mark)

3 (d) The diagram shows a long spanner.

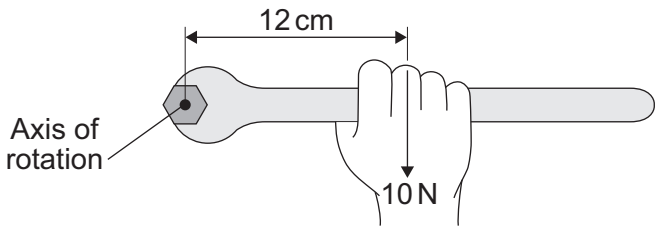

Use the equation in the box to calculate the moment, in N cm, being produced.

moment	=	force	×	perpendicular distance from the line of action of the force to the axis of rotation

Show clearly how you work out your answer.

.....

.....

Moment = ... N cm

(2 marks)

5

4.5.4 Moments, levers and gears (physics only)

Question 15

June 2011 | PHY3F | Original Q8 | Legacy

8 (a) A student investigates the moment of a force.

8 (a) (i) What does the word *moment* mean in this sentence?

.....

.....

(1 mark)

8 (a) (ii) The diagram shows how she sets up her apparatus.

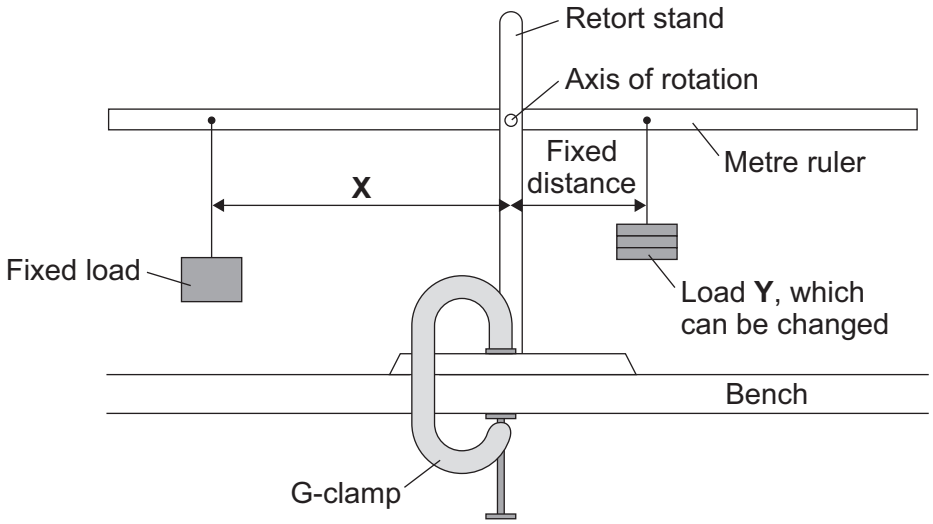

Suggest the purpose of the G-clamp.

.....

.....

(1 mark)

4.5.4 Moments, levers and gears (physics only)

Question 15 · continued

8 (a) (iii) A horizontal rod fits into a hole at the centre of the metre ruler. This is the axis of rotation. The student changes the load **Y** and adjusts the distance **X** until the metre ruler is horizontal. She takes six pairs of measurements which are shown in the table.

Load Y in newtons	Distance X in centimetres
1	7
2	14
3	21
4	28
5	35
6	42

Explain fully how distance **X** varies with load **Y**.

.....

.....

.....

.....

.....

(2 marks)

8 (a) (iv) The weight of the ruler can be ignored in this experiment.

Which statement gives the reason why?

Put a tick (✓) in the box next to your answer.

The weight of the ruler is so small it is negligible. ☐

The centre of mass of the ruler is at the axis of rotation. ☐

The ruler is a symmetrical object. ☐

(1 mark)

Question 8 continues on the next page

4.5.4 Moments, levers and gears (physics only)

Question 15 · continued

8 (b) In the summer, a town council fits hanging baskets to some of its lamp posts.

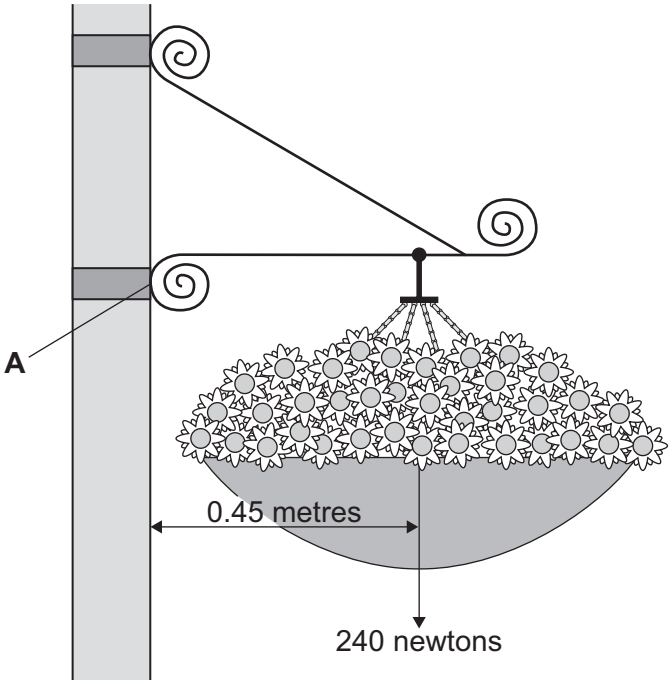

Use the information in the diagram and the equation in the box to calculate the moment produced by the weight of the hanging basket about an axis through point **A**.

moment = force × perpendicular distance from the line of action of the force to the axis of rotation

Show clearly how you work out your answer **and** give the unit.

.....

.....

.....

.....

Moment =.....

(3 marks)

8

4.5.4 Moments, levers and gears (physics only)

Question 16

June 2012 | PH2FP | Original Q8 | Legacy

8 (a) The diagram shows the forces acting on a parachutist in free fall.

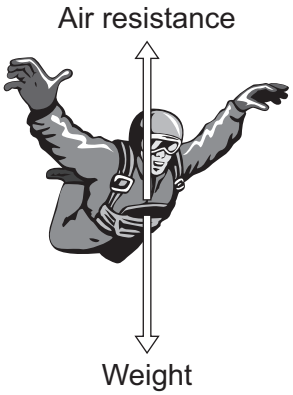

The parachutist has a mass of 75 kg.

Calculate the weight of the parachutist.

gravitational field strength = 10 N/kg

Use the correct equation from the Physics Equations Sheet.

Show clearly how you work out your answer and give the unit.

.....

.....

Weight = ...

(3 marks)

8 (b) *In this question you will be assessed on using good English, organising information clearly and using specialist terms where appropriate.*

The graph shows how the vertical velocity of a parachutist changes from the moment the parachutist jumps from the aircraft until landing on the ground.

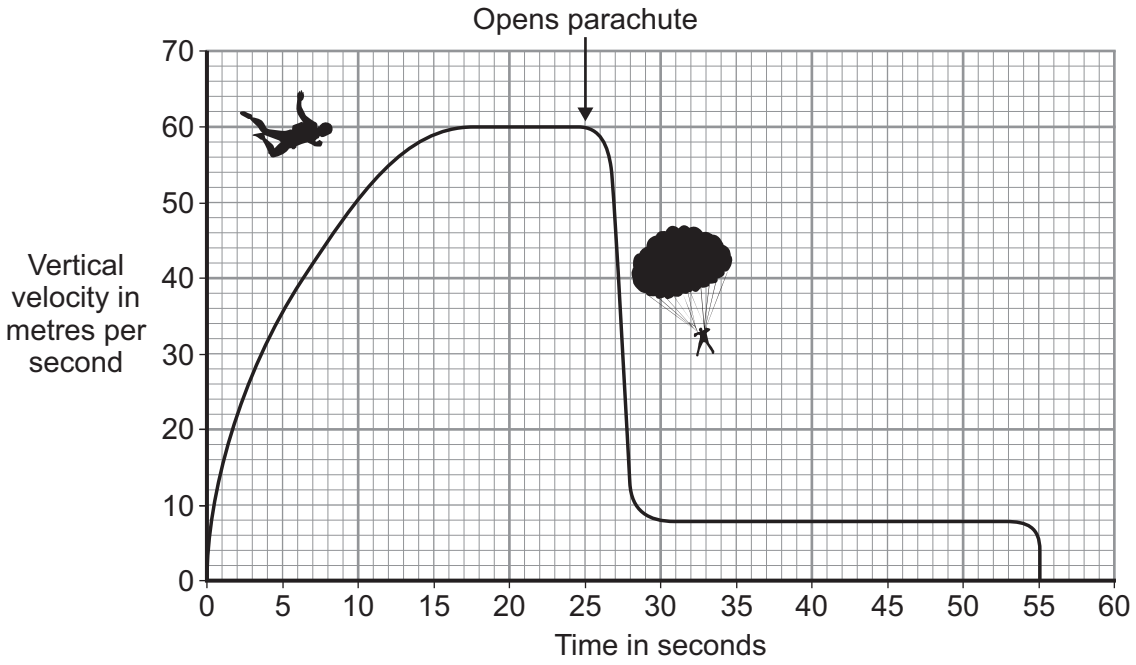

Using the idea of forces, explain why the parachutist reaches a terminal velocity and why opening the parachute reduces the terminal velocity.

.....

.....

.....

.....

.....

.....

.....

.....

.....

.....

(6 marks)

Question 8 continues on the next page

4.5.4 Moments, levers and gears (physics only)

Question 16 · continued

8 (c) A student wrote the following hypothesis.

'The larger the area of a parachute, the slower a parachutist falls.'

To test this hypothesis the student made three model parachutes, **A**, **B** and **C**, from one large plastic bag. The student dropped each parachute from the same height and timed how long each parachute took to fall to the ground.

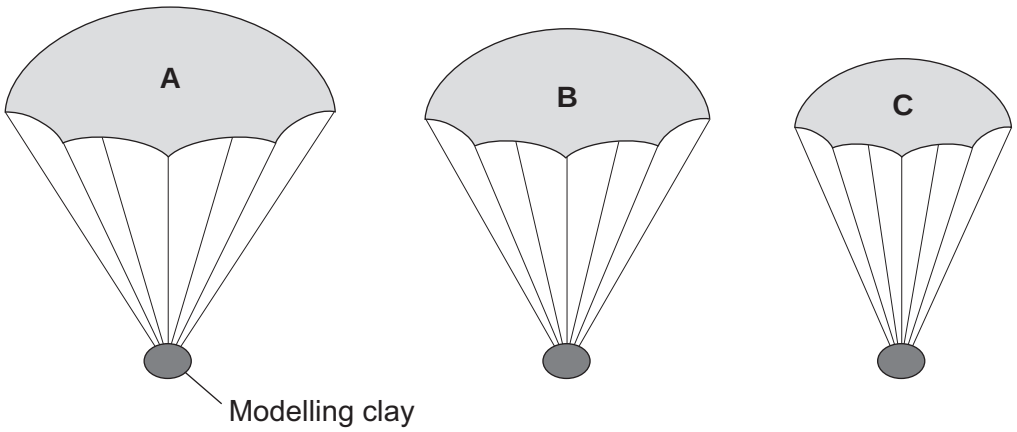

8 (c) (i) The height that the student dropped the parachute from was a control variable.

Name **one** other control variable in this experiment.

.....

(1 mark)

8 (c) (ii) Use the student's hypothesis to predict which parachute, **A**, **B** or **C**, will hit the ground first.

Write your answer in the box. ☐

Give a reason for your answer.

.....

.....

.....

(2 marks)

12

4.5.4 Moments, levers and gears (physics only)

Question 17

June 2013 | PH3FP | Original Q3 | Legacy

3 (a) The diagram shows a pendulum.

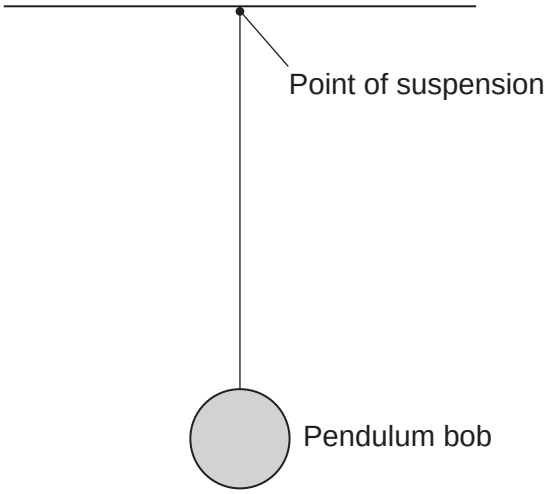

Draw an X on the diagram above, so that the centre of the **X** marks the centre of mass of the pendulum bob.

(1 mark)

3 (b) A large clock keeps time using the swing of a pendulum.

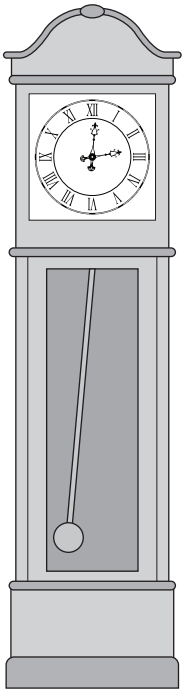

4.5.4 Moments, levers and gears (physics only)

Question 17 · continued

3 (b) (i) The frequency of the swinging pendulum is 0.5 hertz.

Calculate the periodic time of the pendulum.

Use the correct equation from the Physics Equations Sheet.

.....

.....

.....

Periodic time = ... seconds
(2 marks)

3 (b) (ii) Calculate the number of complete swings the pendulum would make in 60 seconds.

Use your answer from part **(b)(i)** in your calculation.

.....

.....

.....

Number of swings in 60 seconds = ...
(2 marks)

Question 3 continues on the next page

4.5.4 Moments, levers and gears (physics only)

Question 17 · continued

3 (c) The diagram shows a clock on a trolley.

The trolley is being used to move the clock.

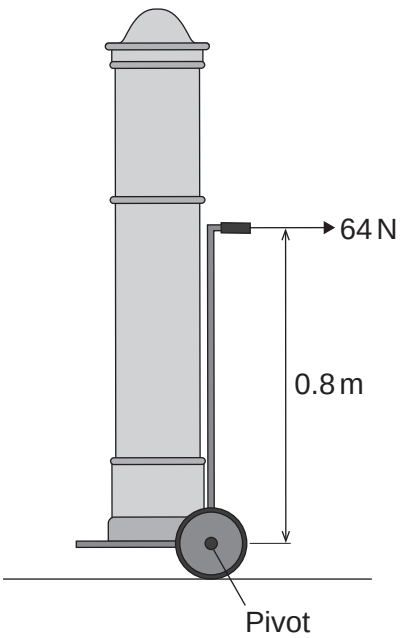

Calculate the moment of the 64 N force about the pivot.

Use the correct equation from the Physics Equations Sheet.

.....

.....

.....

Moment of the force = ... Nm

(2 marks)

4.5.4 Moments, levers and gears (physics only)

Question 17 · continued

3 (d) The design of the trolley is now changed to make it taller.

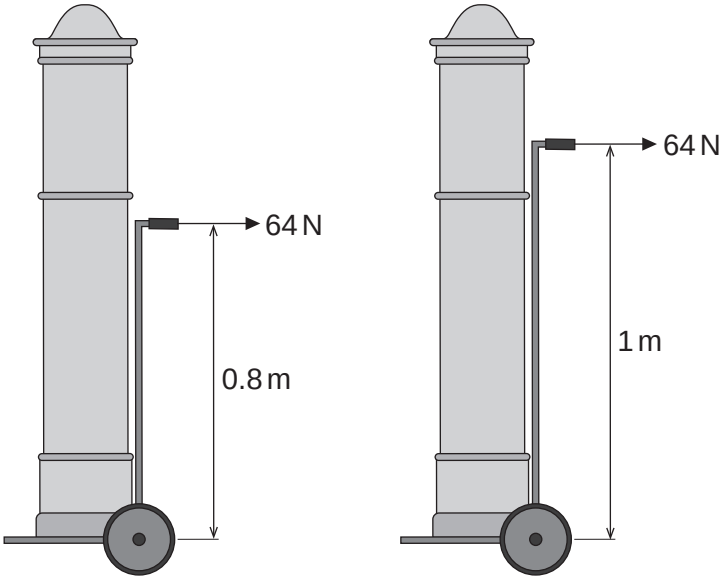

How does making the trolley taller affect the moment produced by the 64 N force about the pivot?

.....

.....

(1 mark)

8

4.5.4 Moments, levers and gears (physics only)

Question 18

June 2013 | PH3FP | Original Q6 | Legacy

6 Mountain bike riders use brakes to slow down.



Some mountain bikes use liquid-filled pipes to transmit the force from the rider's hand on the brake lever to the brake pads. These brakes are called hydraulic brakes.

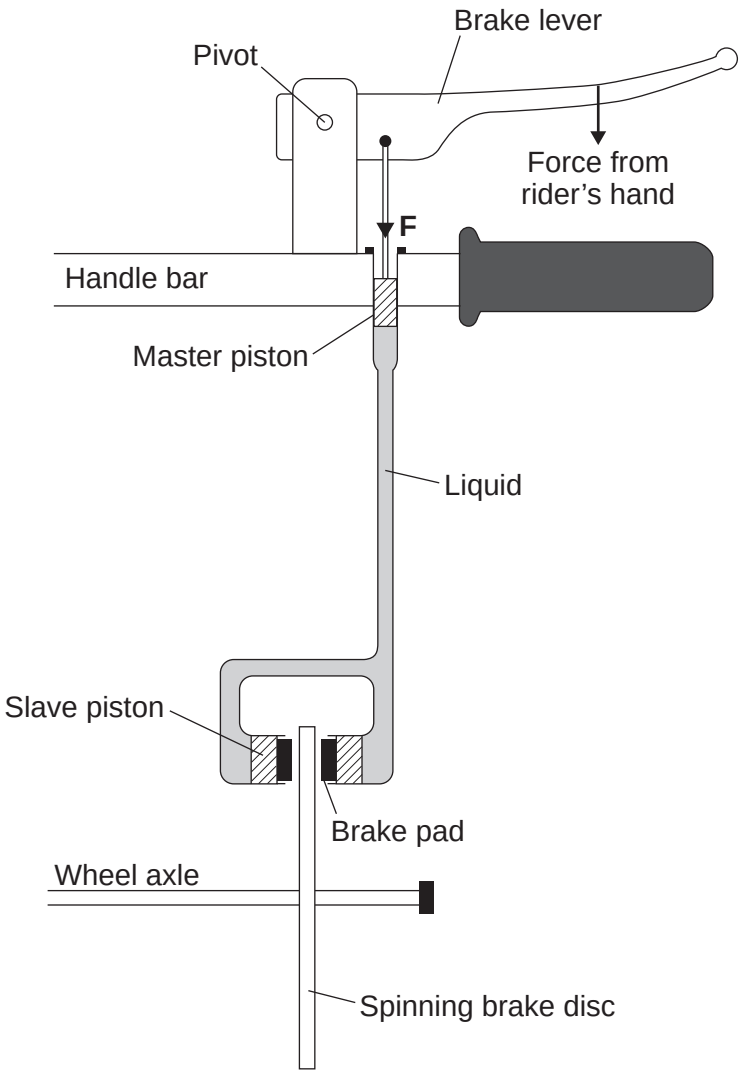

4.5.4 Moments, levers and gears (physics only)

Question 18 · continued

6 (a) Draw a ring around the correct answer to complete each sentence.

6 (a) (i) Liquids can be used to transmit the forces in a brake system,

because liquids

- are incompressible.
- can flow.
- take the shape of the container.

(1 mark)

6 (a) (ii) The pressure in the liquid is transmitted

- against force **F** only.
- downwards only.
- in all directions.

(1 mark)

6 (b) When the rider's hand pulls on the brake lever, the force **F** applied to the liquid by the master piston is 80 N. The cross-sectional area of this piston is 50 mm^2.

Calculate the pressure, in N/mm^2, exerted on the liquid by the master piston.

Use the correct equation from the Physics Equations Sheet.

.....

.....

.....

Pressure = ... N/mm^2

(2 marks)

6 (c) The unit N/mm^2 is **not** the usual unit of pressure.

Which unit is usually used when calculating pressure?

Draw a ring around the correct answer.

N Nm^2 Pa

(1 mark)

6 (d) The rider applies a larger force to the brake lever. How would this increase in force affect the pressure in the liquid?

.....

(1 mark)

6

4.5.4 Moments, levers and gears (physics only)

Question 19

June 2014 | PH3FP | Original Q2 | Legacy

2 **Figure 2** shows a girl standing on a diving board.

Figure 2

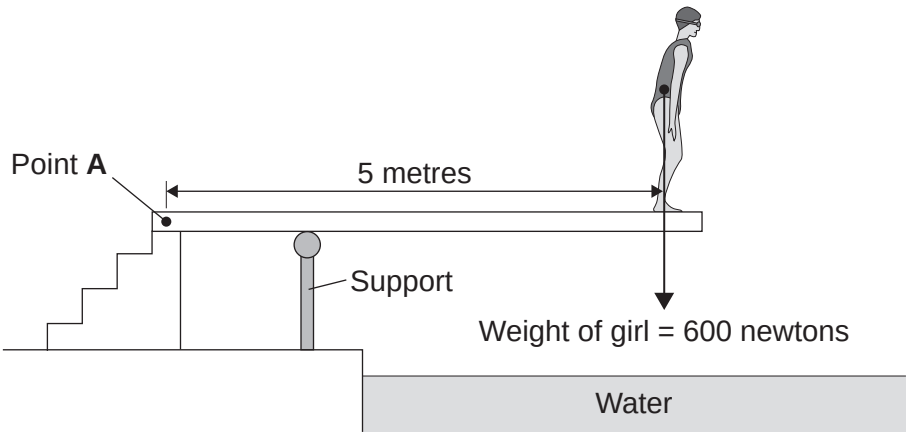

2 (a) Calculate the moment of the girl's weight about Point **A**.

Use the correct equation from the Physics Equations Sheet.

[2 marks]

.....

.....

.....

Moment = ... newton metres

4.5.4 Moments, levers and gears (physics only)

Question 19 · continued

2 (b) **Figure 3** shows the girl standing at a different place on the diving board.

The support provides an upward force **F** to keep the diving board balanced.

Figure 3

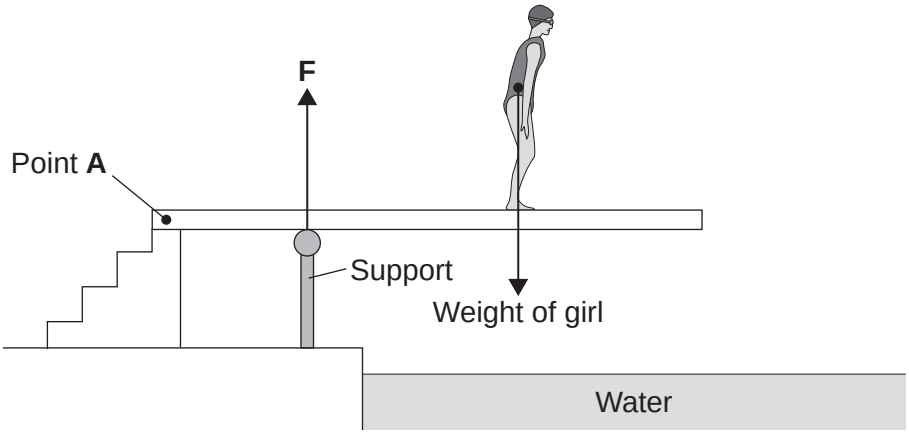

Complete the following sentence.

[1 mark]

The diving board is not turning. The total clockwise moment is balanced

by the total ..... .

Question 2 continues on the next page

4.5.4 Moments, levers and gears (physics only)

Question 19 · continued

2 (c) **Figure 4** shows how the upward force **F** varies with the distance of the girl from Point **A**.

Figure 4

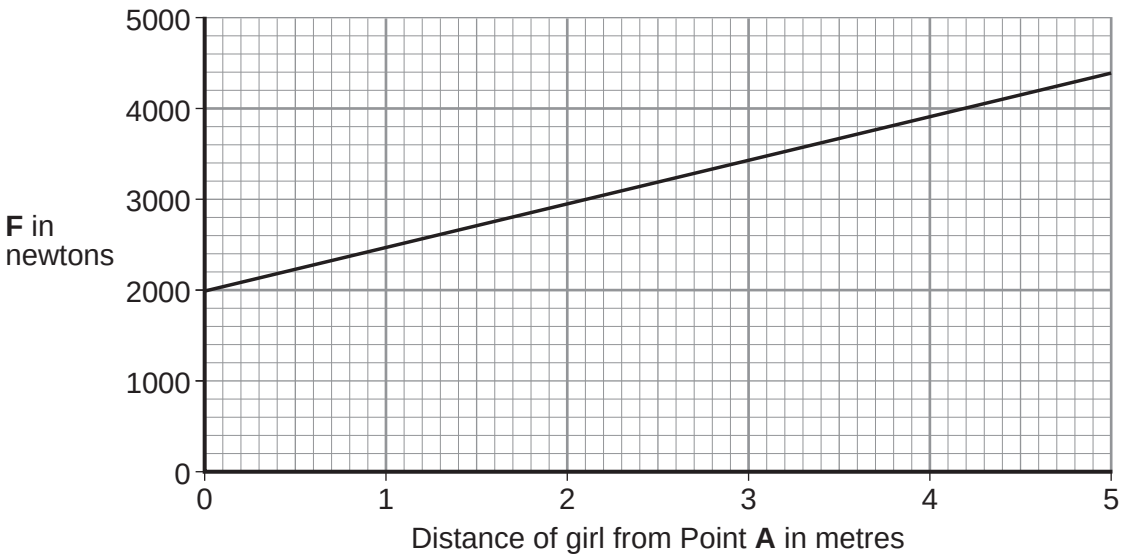

2 (c) (i) Use **Figure 4** to determine the upward force **F** when the girl is standing at a distance of 3 metres from point **A**.

[1 mark]

Upward force **F** = ... newtons

2 (c) (ii) What conclusion should be made from **Figure 4**?

[1 mark]

.....

.....

.....

5

4.5.4 Moments, levers and gears (physics only)

Question 20

June 2014 | PH3FP | Original Q4 | Legacy

4 (a) Use the correct answer from the box to complete the sentence.

[1 mark]

concentrated	**stored**	**pivoted**

The centre of mass of an object is the point at which the mass of an object may be thought to be ..... .

4 (b) **Figure 6** shows an oval-shaped piece of card.

Draw an **X** on **Figure 6**, so that the centre of the **X** marks the centre of mass of the oval shape.

[1 mark]

Figure 6

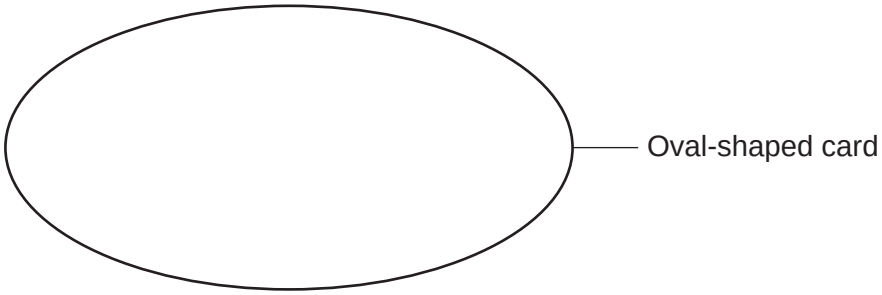

Question 4 continues on the next page

4 (c) **Figure 7** shows some apparatus and a sheet of card.

Figure 7

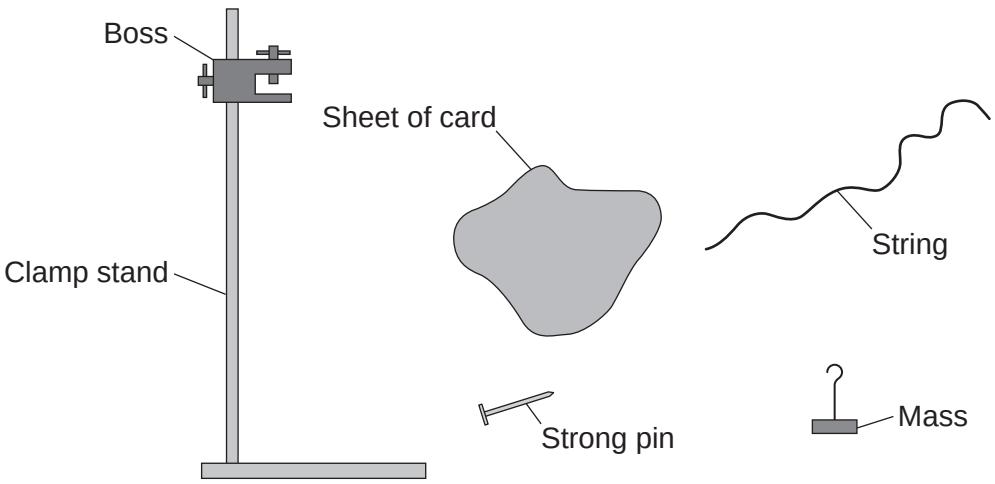

The sentences describe how to find the centre of mass of the sheet of card.

The sentences are in the wrong order.

A Tie the mass to one end of the string and then hang the string from the pin.

B Repeat this using the other hole. The centre of mass is where the two lines cross on the card.

C Put the pin through one of the holes in the card and hold the pin in the boss.

D Draw a line on the card marking the position of the string.

E Make two holes in the card, with each hole near to the edge of the card.

Put the sentences into the correct order to describe how to find the centre of mass of the card.

Start with **E** and end with **B**.

Write the correct order in these boxes.

[2 marks]

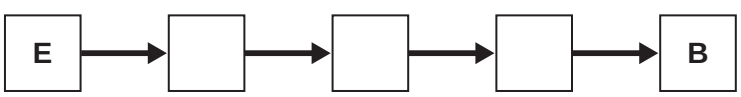

Question 20 · continued

4 (d) **Figure 8** shows a person in a wheelchair.

Figure 8

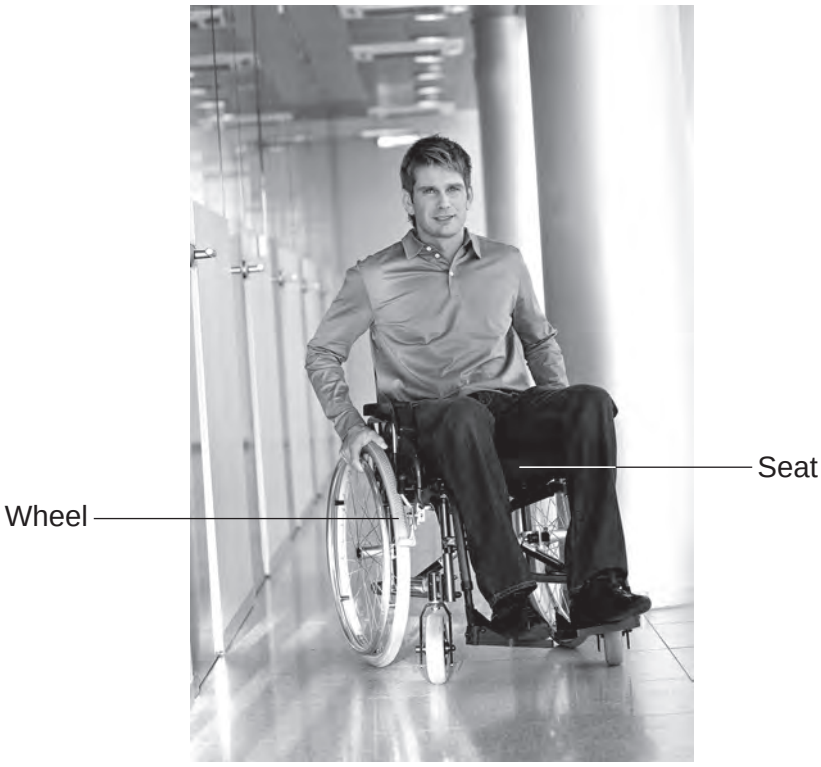

Tipping the wheelchair at a large angle may cause it to become unstable and to topple over.

How could the design of this wheelchair be changed to make it less likely to be toppled over?

Tick (✓) **two** boxes.

[2 marks]

- Lower the person's seating position ☐
- Make the wheelchair from lighter materials ☐
- Move the wheels further apart ☐
- Use taller wheels ☐

6

4.5.4 Moments, levers and gears (physics only)

Question 21

June 2015 | PH3FP | Original Q1 | Legacy

1 (a) Use the correct answer from the box to complete the sentence.

[1 mark]

balancing	stretching	turning

A moment is the ..... effect of a force.

1 (b) **Figure 1** shows how a lever can be used to lift a heavy rock.

Figure 1

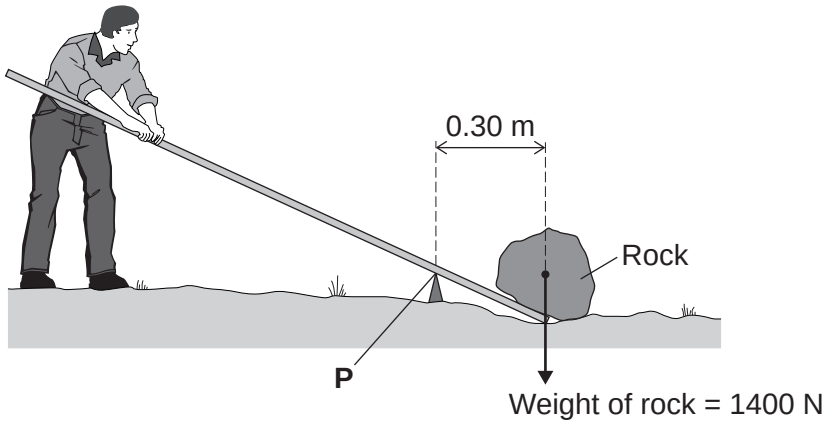

Calculate the moment of the weight of the rock about point **P**.

Use the correct equation from the Physics Equations Sheet.

[2 marks]

.....

.....

Moment = ... newton metres

4.5.4 Moments, levers and gears (physics only)

Question 21 · continued

1 (c) **Figure 2** shows three positions on the lever, **A**, **B** and **C**, where the person could have applied a force to lift the rock.

Figure 2

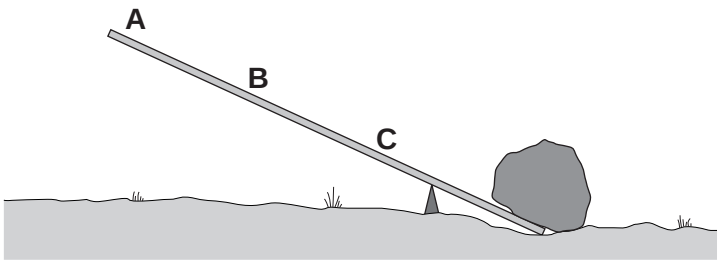

Which position, **A**, **B** or **C**, needs the smallest force to lift the rock?

Draw a ring around the correct answer.

[2 marks]

A **B** **C**

Give the reason for your answer.

.....

.....

5

4.5.4 Moments, levers and gears (physics only)

Question 22

June 2016 | PH3FP | Original Q3 | Legacy

3 **Figure 4** is a simplified diagram of a hydraulic brake system.

Figure 4

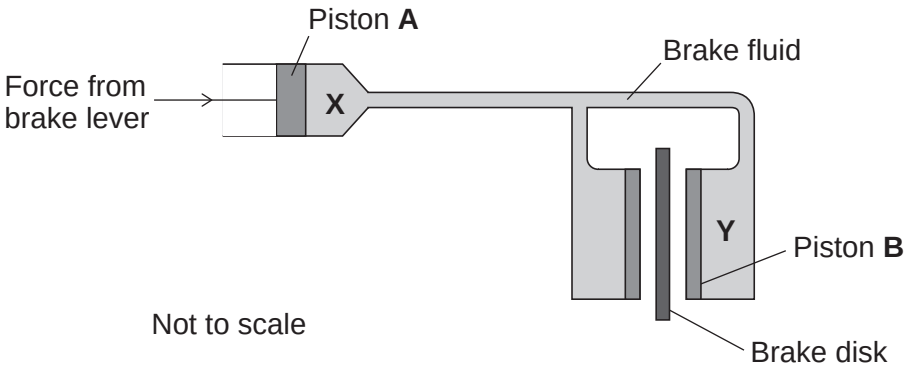

3 (a) Which is the correct statement about the pressure at **X** and the pressure at **Y**?

[1 mark]

Tick (✓) **one** box.

The pressure at **X** is greater than at **Y** ☐

The pressure at **X** is the same as at **Y** ☐

The pressure at **X** is less than at **Y** ☐

3 (b) Piston **B** is larger than piston **A**.

How will this affect the size of the force on piston **B**?

Use the correct answer from the box to complete the sentence.

[1 mark]

smaller than	**the same as**	**larger than**

The force on piston **B** will be _____ the force on piston **A**.

4.5.4 Moments, levers and gears (physics only)

Question 22 · continued

3 (c) (i) A force of 24 N acts on piston **A**. The cross-sectional area of piston **A** is 8 mm^2.

Calculate the pressure in N/mm^2 at position **X**.

Use the correct equation from the Physics Equations Sheet.

[2 marks]

Pressure = _____ N/mm^2

3 (c) (ii) The unit N/mm^2 is not often used to measure pressure.

Which unit is usually used to measure pressure?

[1 mark]

Tick (✓) **one** box.

- newton ☐
- pascal ☐
- watt ☐

3 (d) The liquid used in the hydraulic brake system freezes at –30 °C.

Suggest **one** effect a temperature below –30 °C would have on the brake system.

[1 mark]

6

4.5.4 Moments, levers and gears (physics only)

Question 23

June 2016 | PH3FP | Original Q4 | Legacy

4 A sign hangs from the ceiling using two cables, as shown in **Figure 5**.

Figure 5

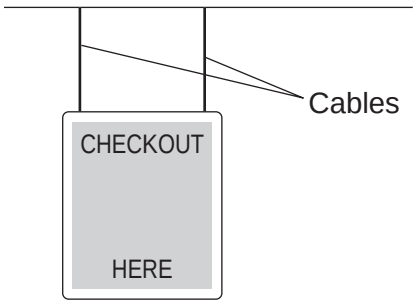

4 (a) On **Figure 5**, mark the centre of mass of the sign using an X.

[1 mark]

4 (b) Use the correct answer from the box to complete the sentence.

[1 mark]

concentrated	**greatest**	**pivoted**

The centre of mass of an object is the point where the mass appears

to be _____ .

4 (c) A breeze made the sign swing forwards and backwards like a pendulum.
The frequency of oscillations of the sign was 2 hertz.

Calculate the periodic time for the sign.

Use the correct equation from the Physics Equations Sheet.

[2 marks]

_____

_____

_____

Periodic time = _____ seconds

4.5.4 Moments, levers and gears (physics only)

Question 23 · continued

4 (d) **Figure 6** is a sketch graph showing how the frequency of the oscillations of a pendulum changes as the length of the pendulum is increased.

Figure 6

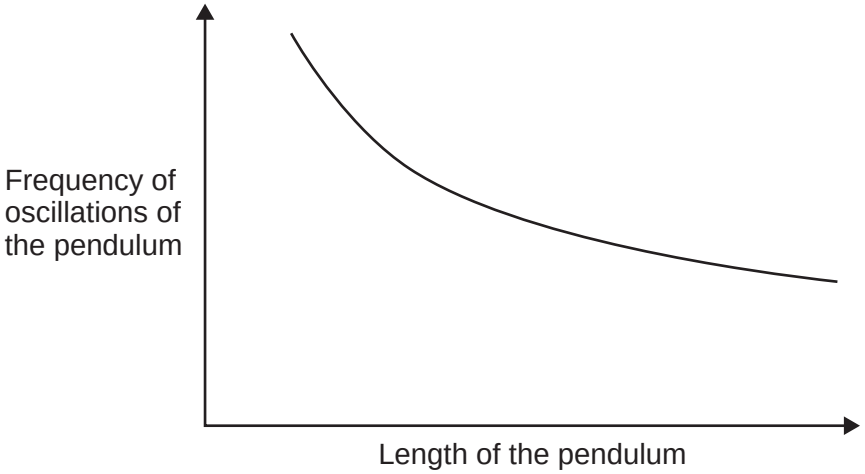

Give **one** way the sign could be made to swing with a lower frequency.
Use **only** the information in the sketch graph.

[1 mark]

_____

_____

5

4.5.4 Moments, levers and gears (physics only)

Question 24

June 2016 | PH3FP | Original Q6 | Legacy

6 A drum is hit by a beater attached to a drumstick lever. The drumstick lever is attached to a foot-pedal by a chain, as shown in **Figure 8**.

Figure 8

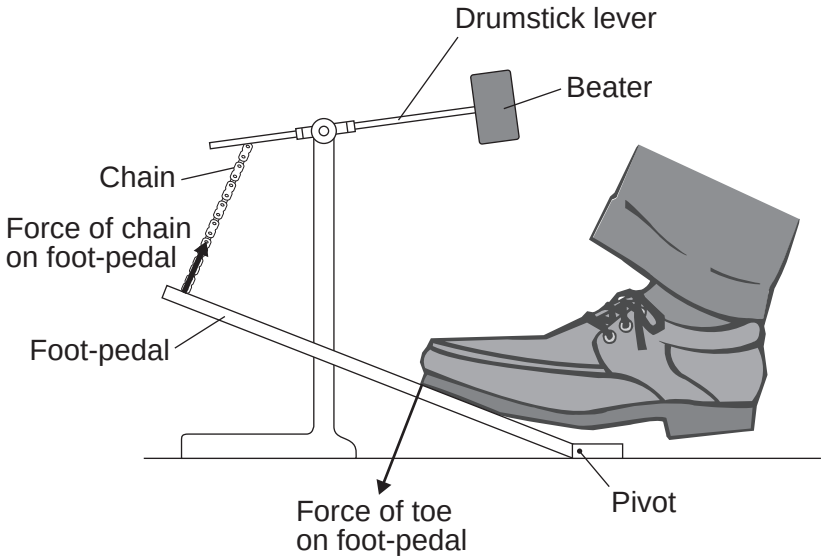

6 (a) State how the size of the force of the chain on the foot-pedal compares with the size of the force of the toe on the foot-pedal.

[1 mark]

6 (b) The foot-pedal is pushed halfway down and held stationary.

The force of the toe and the force of the chain each create a moment which acts on the foot-pedal.

Compare the size and direction of the moments of the toe and the chain.

[1 mark]

Tick (✓) **one** box.

Size	Direction	Tick (✓)
The moments are equal	same	
The moments are equal	opposite	
The moment of the force of the toe is greater	same	

4.5.4 Moments, levers and gears (physics only)

Question 24 · continued

6 (c) How can the drummer create a greater moment about the pivot without increasing the force he applies?

[1 mark]

_____

_____

3

Turn over for the next question

4.5.4 Moments, levers and gears (physics only)

Question 25

1 Two children visit a playground.

1 (a) **Figure 1** shows the two children, **A** and **B**, sitting on a see-saw.

Figure 1

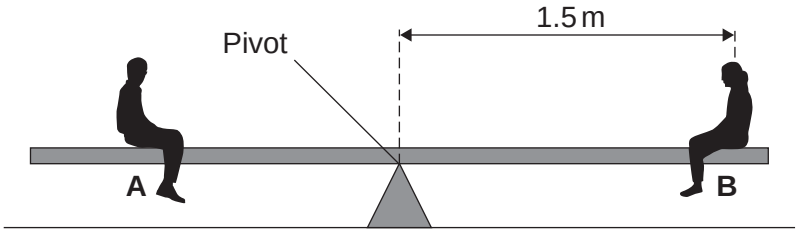

1 (a) (i) The weight of child **A** and the weight of child **B** each create a moment about the pivot.

What is meant by 'the moment of a force'?

[1 mark]

Tick (✓) **one** box.

the direction of the force ☐

the turning effect of the force ☐

the size of the force ☐

1 (a) (ii) The see-saw is balanced.

Use the correct answer from the box to complete the sentence.

[1 mark]

smaller than	**equal to**	**greater than**

The size of the moment of child **A** is _____ the size of the moment of child **B**.

4.5.4 Moments, levers and gears (physics only)

Question 25 · continued

1 (a) (iii) Child **B** has a weight of 400 N and is sitting 1.5 m from the pivot.

Calculate the moment of child **B** about the pivot.

Use the correct equation from the Physics Equations Sheet.

Choose the correct unit.

[3 marks]

kilogram **newton-metre** **newton per metre**

Moment = _____ unit _____

Question 1 continues on the next page

Question 25 · continued

1 (b) Child **A** now sits on a swing as shown in **Figure 2**. The swing is not moving.

Figure 2

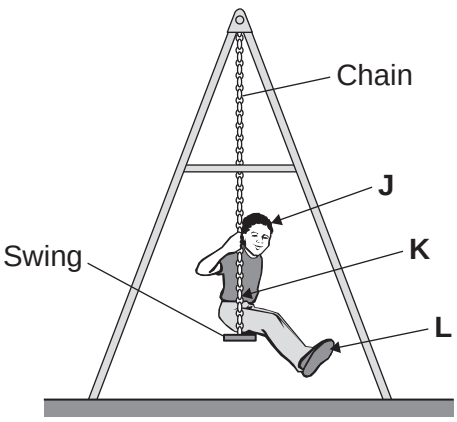

Which arrow, **J**, **K** or **L**, points to the centre of mass of the child?

[1 mark]

Tick (✓) **one** box.

J ☐

K ☐

L ☐

1 (c) The child on the swing is now moving backwards and forwards like a pendulum. The frequency of the swing is 0.5 hertz.

Calculate the periodic time of the swing.

Use the correct equation from the Physics Equations Sheet.

[2 marks]

_____

_____

Periodic time = _____ s

8

4.5.4 Moments, levers and gears (physics only)

Question 26

June 2018 | 8463/2F | Original Q7

0 7 **Figure 9** shows a fork-lift truck lifting a heavy crate.

Figure 9

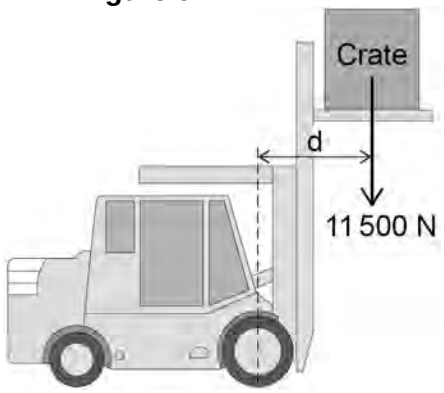

0 7 . 1 The crate weighs 11 500 N and is lifted vertically 2.60 m.

Calculate the work done to lift the crate.

Use the equation:

work done = force × distance

[2 marks]

Work done = _____ J

4.5.4 Moments, levers and gears (physics only)

Question 26 · continued

The weight of the crate causes a clockwise moment of 13 800 Nm about the centre of the front wheel of the fork-lift truck.

0 7 . 2 The weight of the fork-lift truck and driver cause an anticlockwise moment.

What is the minimum size of the anticlockwise moment needed so that the fork-lift truck does **not** topple over?

[1 mark]

0 7 . 3 Write down the equation which links distance, force and moment of a force.

[1 mark]

0 7 . 4 Calculate the distance '**d**' marked on **Figure 9**.

[3 marks]

Distance '**d**' = _____ m

7

4.5.4 Moments, levers and gears (physics only)

Question 27

June 2019 | 8463/1F | Original Q11

1 1 A scientist investigated how the maximum muscle power of humans varies with age and gender.

The scientist asked volunteers to stand on a platform and to jump as high as they could.

Figure 18 shows a volunteer taking part in the experiment.

Figure 18

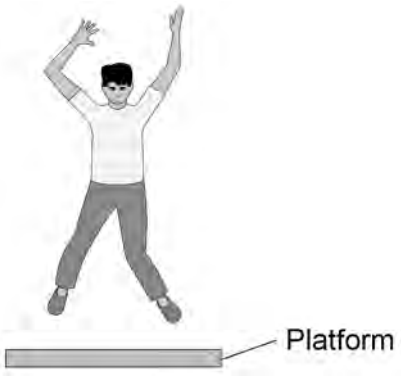

An electronic timer measured the time that the volunteer was in the air.

1 1 . 1 The muscle power in watts per kg is calculated using the following equation:

$$\text{muscle power} = \frac{9.8 \times \text{jump height}}{\text{time}}$$

One volunteer has a muscle power of 41 W/kg

He was in the air for 0.12 s

Calculate his jump height.

[3 marks]

Jump height = _____ m

Question 27 · continued

1 1 . 2 Write down the equation which links kinetic energy, mass and speed.

[1 mark]

1 1 . 3 One volunteer had a kinetic energy of 270 J and a speed of 3.0 m/s at the moment he left the ground.

Calculate his mass.

[3 marks]

Mass = _____ kg

Figure 19 shows the scientist's results.

Figure 19

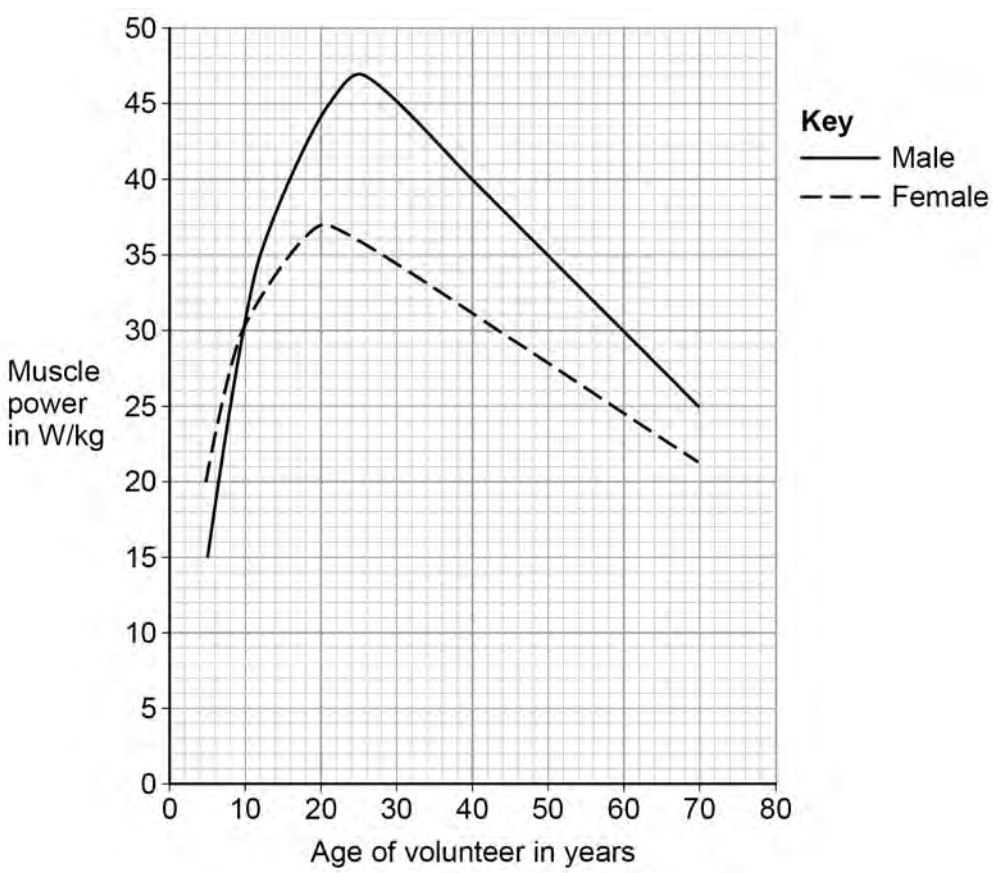

4.5.4 Moments, levers and gears (physics only)

Question 27 · continued

1 1 . 4 Compare the muscle power of males with the muscle power of females.

Use data from **Figure 19** in your answer.

[4 marks]

1 1 . 5 The muscle power of each volunteer was measured five times.

The highest muscle power reading was recorded instead of calculating an average.

Suggest **one** reason why.

[1 mark]

1

4.5.4 Moments, levers and gears (physics only)

Question 28

June 2019 | 8463/2F | Original Q1

0 1 **Figure 1** shows an athlete on starting blocks waiting to start a 100 metre race.

Figure 1

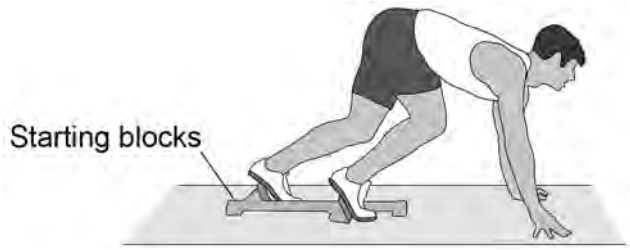

0 1 . 1 Complete the sentence.

Choose the answer from the box.

[1 mark]

equal to	**greater than**	**less than**

The force from the athlete pushing backwards on the starting blocks

is _____ the force from the starting

blocks pushing forwards on the athlete.

Question 1 continues on the next page

4.5.4 Moments, levers and gears (physics only)

Question 28 · continued

Figure 2 shows a distance-time graph for the athlete from the moment the race starts.

Figure 2

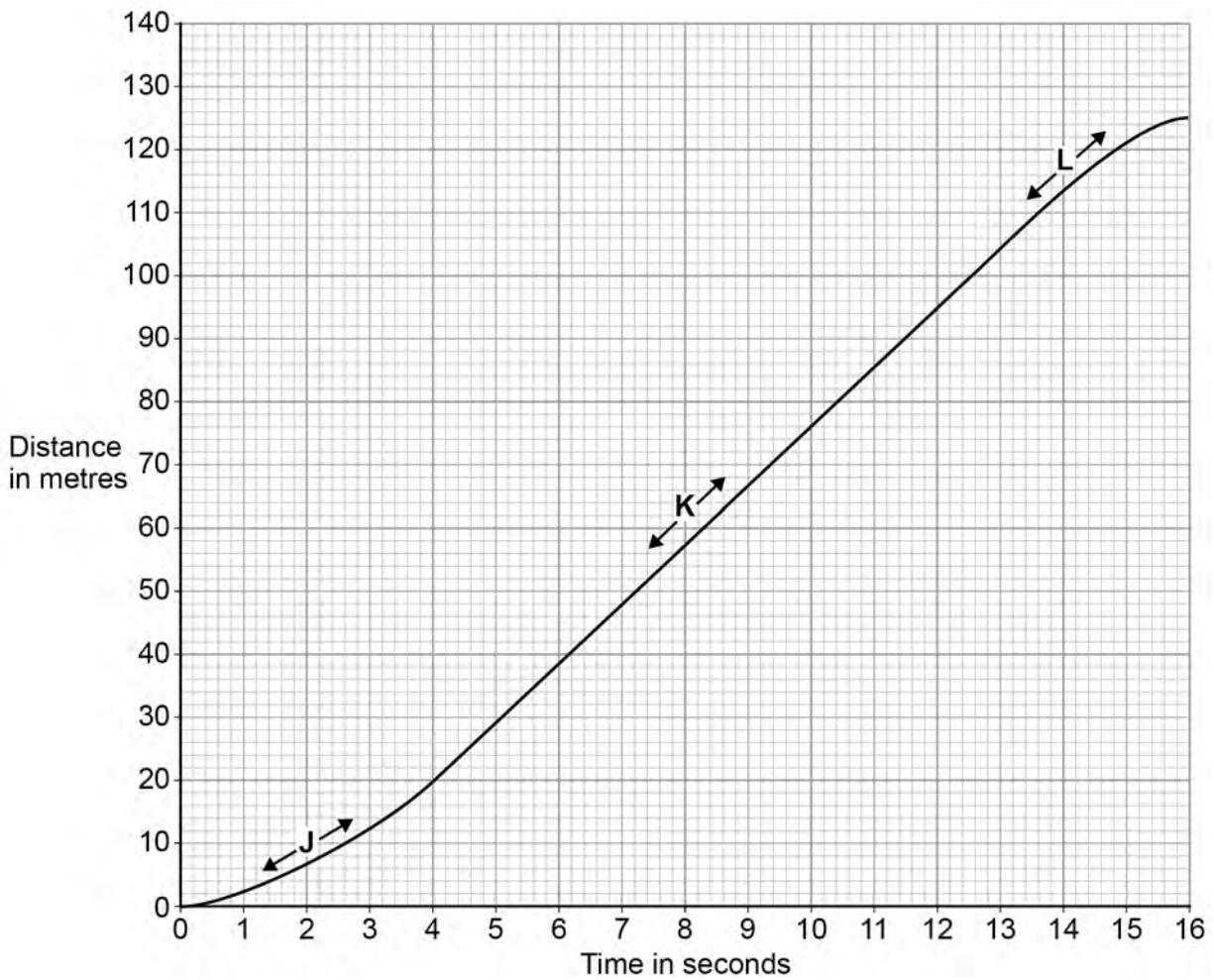

Question 28 · continued

0 1 . 2 Three parts of the distance-time graph are labelled **J**, **K** and **L**.

Draw **one** line from **each** of the labels to the correct description of the athlete's motion for that part of the graph.

[2 marks]

Labels	Description of motion
J	not moving
K	constant speed
L	decreasing speed
	increasing speed

0 1 . 3 What distance does the athlete travel after the end of the race before stopping?

[1 mark]

Distance = _____ m

0 1 . 4 Calculate the average speed of the athlete between the start and finish of the 100 metre race.

Use the equation:

$$\text{average speed} = \frac{\text{distance travelled}}{\text{time taken}}$$

[2 marks]

_____

_____

_____

Average speed = _____ m/s

4.5.4 Moments, levers and gears (physics only)

Question 28 · continued

0 1 . 5 The athlete runs faster than a typical person.

What is the average running speed of a typical person in metres per second?

[1 mark]

Tick (✓) **one** box.

- 1.5 ☐
- 3.0 ☐
- 4.5 ☐
- 6.0 ☐

7

4.5.4 Moments, levers and gears (physics only)

Question 29

June 2019 | 8463/2F | Original Q7

0 7 . 1 **Figure 17** shows four examples of a force causing an object to move.

Figure 17

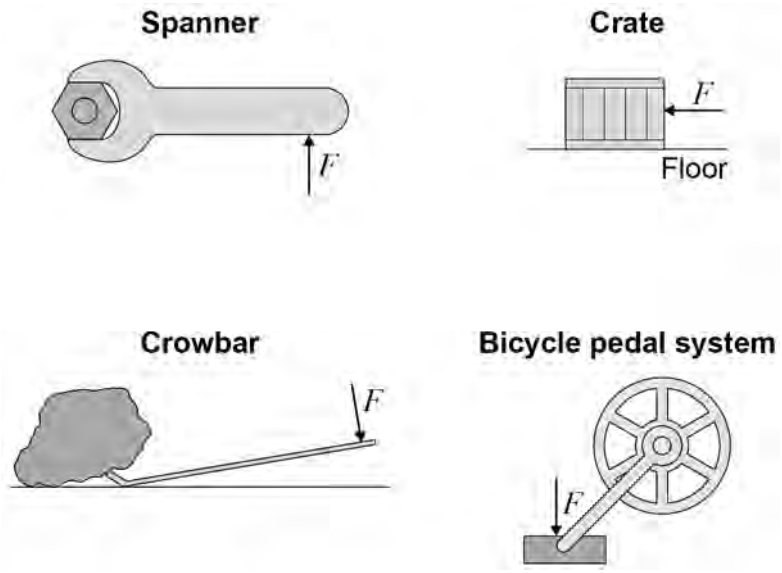

Which object is **not** likely to rotate?

[1 mark]

Tick (✓) **one** box.

Bicycle pedal system ☐

Crate ☐

Crowbar ☐

Spanner ☐

Question 7 continues on the next page

Question 29 · continued

Figure 18 shows a simple device that can be used as a weighing scale.

Figure 19 shows the device being used to measure a quantity of rice.

The weight of the device is balanced by the weight of the rice and basket.

Figure 18

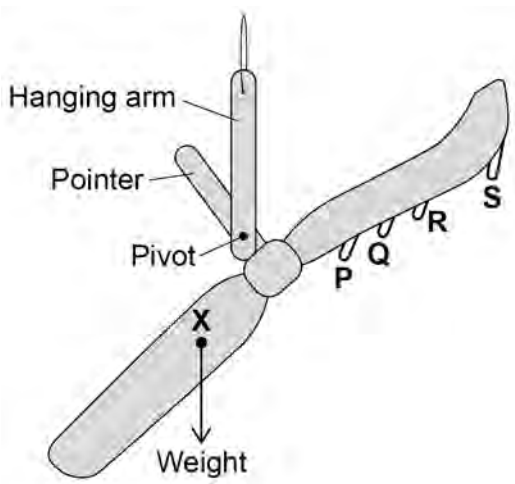

Figure 19

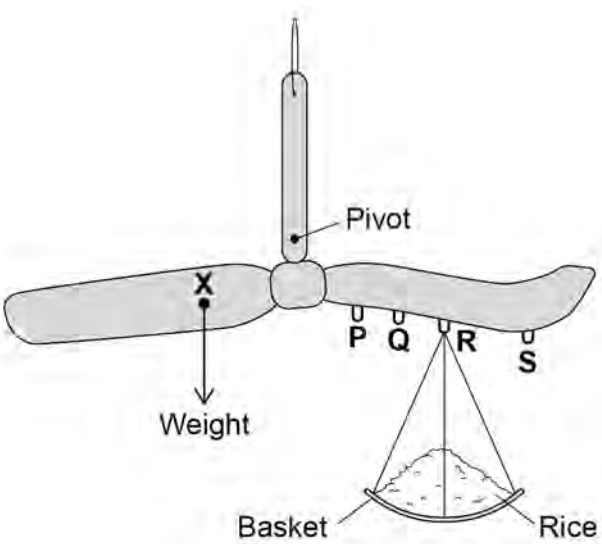

0 7 . 2 The weight of the device acts through the point labelled **X**.

What is point **X** called?

[1 mark]

Tick (✓) **one** box.

Centre of balance ☐

Centre of mass ☐

Centre of weight ☐

Question 29 · continued

0 7 . 3 How does **Figure 19** show that the weight of the device is balanced by the weight of the rice and basket?

[1 mark]

0 7 . 4 The basket can hang from different points on the device.

Where should the basket hang to measure the largest quantity of rice?

[1 mark]

Tick (✓) **one** box.

P ☐ **Q** ☐ **R** ☐ **S** ☐

0 7 . 5 Write down the equation which links distance, force and moment of a force.

[1 mark]

0 7 . 6 In **Figure 19**, the weight of the device causes an anticlockwise moment of 0.15 Nm about the pivot.

The weight of the rice and basket acts 0.06 m from the pivot.

Calculate the weight of the rice and basket.

[3 marks]

Weight of rice and basket = _____ N

4.5.4 Moments, levers and gears (physics only)

Question 29 · continued

0 7 . 7 Write down the equation which links gravitational field strength, mass and weight.

[1 mark]

0 7 . 8 The basket has a mass of 0.04 kg

gravitational field strength = 9.8 N/kg

Calculate the mass of rice in the basket.

[3 marks]

Mass = _____ kg

12

4.5.4 Moments, levers and gears (physics only)

Question 30

November 2021 | 8463/2F | Original Q2

0 2 **Figure 3** shows a cyclist on a bicycle.

The cyclist is moving at a constant velocity.

Arrows **A** and **B** represent the horizontal forces acting on the bicycle and cyclist.

Figure 3

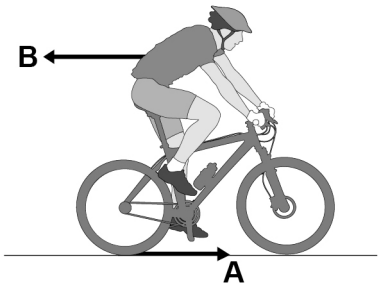

0 2 . 1 What is force **A**?

[1 mark]

Tick (✓) **one** box.

- Air resistance ☐
- Friction ☐
- Tension ☐
- Upthrust ☐

4.5.4 Moments, levers and gears (physics only)

Question 30 · continued

0 2 . 2 What is force **B**?

[1 mark]

Tick (✓) **one** box.

- Air resistance ☐
- Magnetic ☐
- Tension ☐
- Upthrust ☐

0 2 . 3 What is the relationship between force **A** and force **B** when the cyclist travels at a constant velocity?

[1 mark]

Tick (✓) **one** box.

- **A = B** ☐
- **A > B** ☐
- **A < B** ☐

Question 2 continues on the next page

Question 30 · continued

0 2 . 4 The cyclist applies a force of 150 N to one of the bicycle pedals.

Figure 4 shows the distance between the force applied and the pivot.

Figure 4

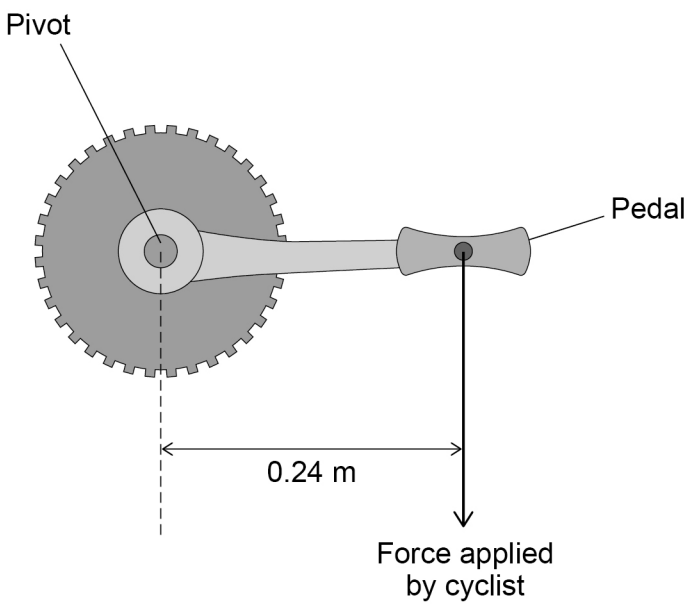

Calculate the moment about the pivot caused by the force applied to the pedal in **Figure 4**.

Use the equation:

moment of a force = force × distance

[2 marks]

Moment = _____ N m

0 2 . 5 **Figure 5** shows how the pedal is connected to the back wheel of the bicycle.

Figure 5

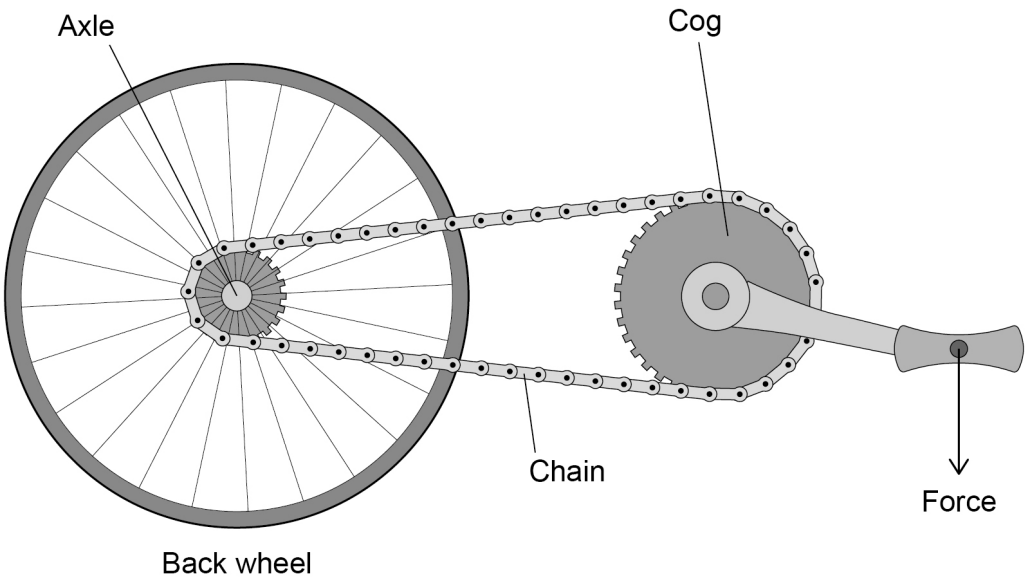

Complete the sentence.

Choose the answer from the box.

[1 mark]

axle	**chain**	**cog**

The force from the cyclist pushing down on the pedal is transmitted to the back wheel by the _____ .

Question 2 continues on the next page

Question 30 · continued

Figure 6 shows how the velocity of the cyclist changes during a journey.

Figure 6

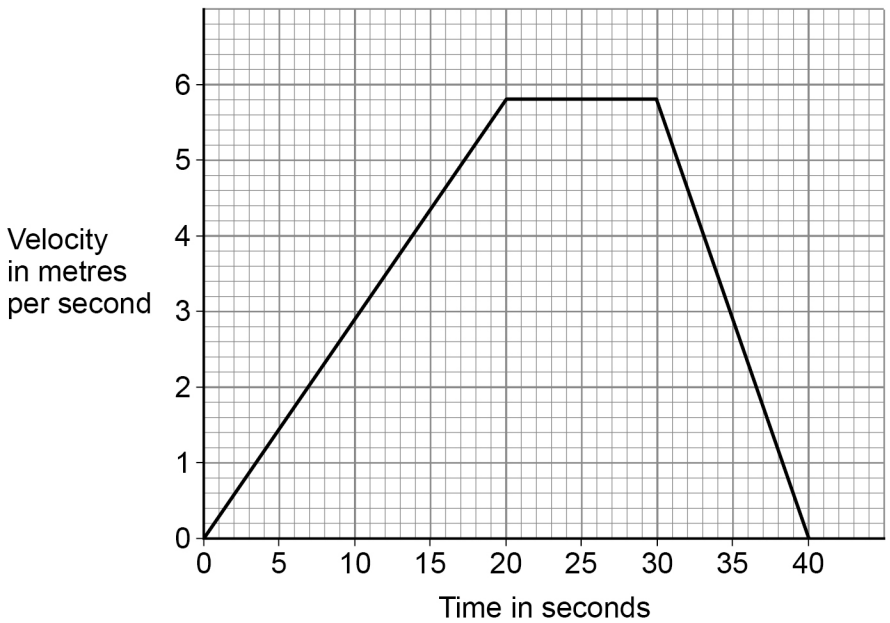

0 2 . 6 What is the change in velocity of the cyclist in the first 20 seconds of the journey?

[1 mark]

Tick (✓) **one** box.

5.2 m/s ☐

5.4 m/s ☐

5.6 m/s ☐

5.8 m/s ☐

Question 30 · continued

0 2 . 7 Determine the acceleration of the cyclist during the first 20 seconds of the journey.

Use your answer from Question **02.6**

Use the equation:

$$\text{acceleration} = \frac{\text{change in velocity}}{\text{time taken}}$$

[2 marks]

Acceleration of the cyclist = _____ m/s^2

0 2 . 8 Complete the sentence.

Choose the answer from the box.

[1 mark]

deceleration	**speed**	**velocity**

Between 30 and 40 seconds the cyclist moves with

a constant _____ .

Question 2 continues on the next page

4.5.4 Moments, levers and gears (physics only)

Question 30 · continued

0 2 . 9 The cyclist travels from home to school.

Figure 7 shows the route the cyclist followed.

Figure 7

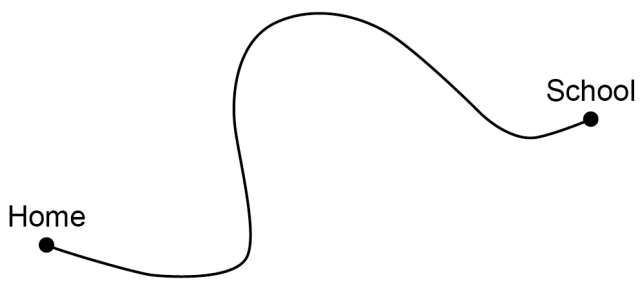

Draw an arrow on **Figure 7** to show the displacement of the cyclist.

[1 mark]

11

4.5.4 Moments, levers and gears (physics only)

Question 31

0 2 Hailstones are small balls of ice. Hailstones form in clouds and fall to the ground.

Figure 3 shows different-sized hailstones.

Figure 3



0 2 . 1 Which force causes the hailstones to fall to the ground?

[1 mark]

Tick (✓) **one** box.

- Air resistance ☐
- Gravitational force ☐
- Magnetic force ☐
- Tension ☐

4.5.4 Moments, levers and gears (physics only)

Question 31 · continued

0 2 . 2 As the hailstones begin to fall they accelerate.

Which force increases as the hailstones accelerate?

[1 mark]

Tick (✓) **one** box.

- Air resistance ☐
- Gravitational force ☐
- Magnetic force ☐
- Tension ☐

0 2 . 3 After a short time hailstones fall at terminal velocity.

Which of the following statements is true at terminal velocity?

[1 mark]

Tick (✓) **one** box.

- The hailstones begin to slow down. ☐
- The mass of the hailstones increases. ☐
- The resultant force on the hailstones is zero. ☐

Question 2 continues on the next page

Question 31 · continued

A scientist investigated how the terminal velocity of hailstones varies with their diameter.

Figure 4 shows the results.

Figure 4

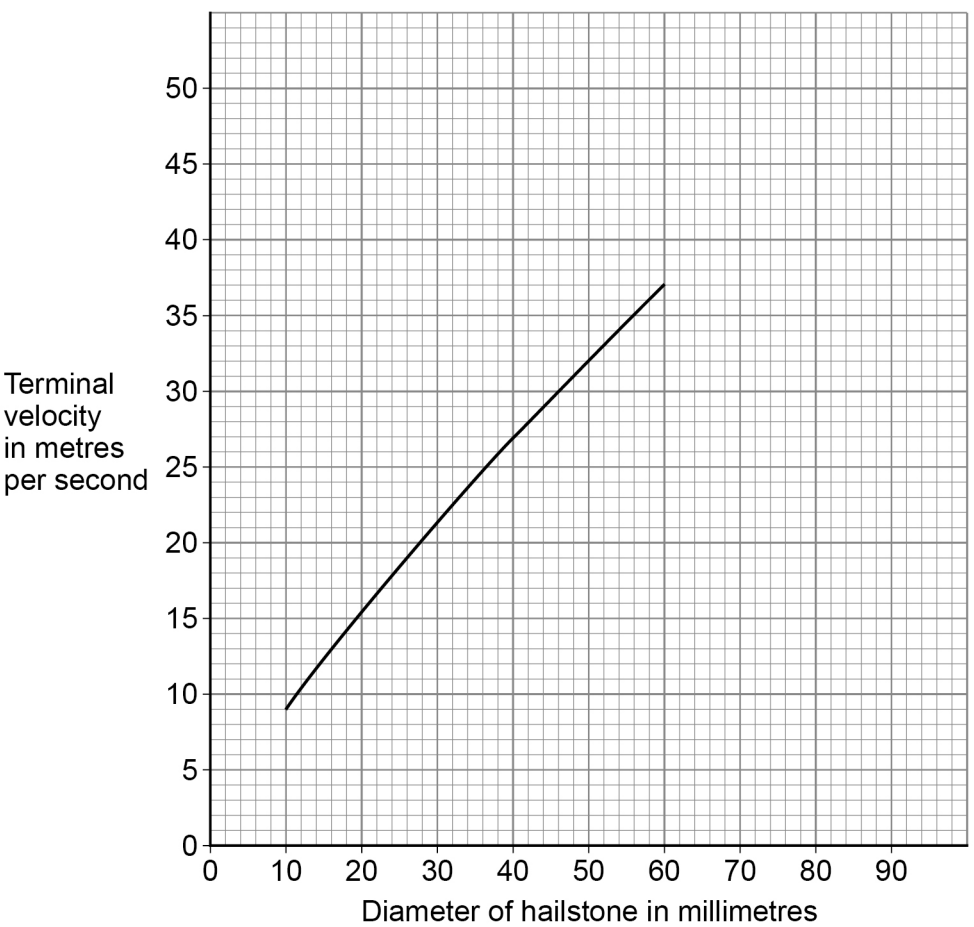

0 2 . 4 Estimate the terminal velocity for a hailstone with a diameter of 80 mm.

Show how you obtain your answer.

[2 marks]

Terminal velocity = _____ m/s

4.5.4 Moments, levers and gears (physics only)

Question 31 · continued

0 2 . 5 Give **one** reason why a hailstone with a large diameter has a greater terminal velocity than a hailstone with a smaller diameter.

[1 mark]

Tick (✓) **one** box.

It has a greater power. ☐

It has a greater pressure. ☐

It has a greater temperature. ☐

It has a greater weight. ☐

Question 2 continues on the next page

4.5.4 Moments, levers and gears (physics only)

Question 31 · continued

After falling, the hailstone hits the ground.

Figure 5 shows the forces acting on the hailstone at the moment it hits the ground.

Figure 5

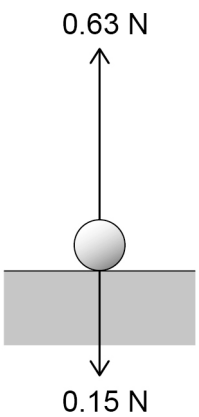

0 2 . 6 What is the magnitude of the resultant force on the hailstone in **Figure 5**?

[1 mark]

Tick (✓) **one** box.

- 0.15 N ☐
- 0.48 N ☐
- 0.63 N ☐
- 0.78 N ☐

0 2 . 7 What is the direction of the resultant force on the hailstone in **Figure 5**?

[1 mark]

8

4.5.4 Moments, levers and gears (physics only)

Question 32

June 2024 | 8463/2F | Original Q9

0 9 **Figure 17** shows a young child using a baby walker.

Figure 17



0 9 . 1 The child is standing still.

What is the resultant **vertical** force on the child?

Give a reason for your answer.

[2 marks]

Resultant vertical force = _____ N

Reason _____

_____

4.5.4 Moments, levers and gears (physics only)

Question 32 · continued

Use the Physics Equations Sheet to answer questions **09.2** and **09.3**.

0 9 . 2 Write down the equation which links distance (*s*), force (*F*) and work done (*W*).

[1 mark]

0 9 . 3 The child pushed the baby walker 2.8 m across a horizontal floor.

The work done by the child was 35 J.

Calculate the horizontal force the child applied to the baby walker.

[3 marks]

Horizontal force = _____ N

0 9 . 4 The child pushed the baby walker from a carpet onto a hard floor.

The child applied the same horizontal force to the baby walker.

Explain why the speed of the baby walker increased.

[2 marks]

Question 32 · continued

There are some toy gears on the front of the baby walker.

Figure 18 shows the gears.

Figure 18

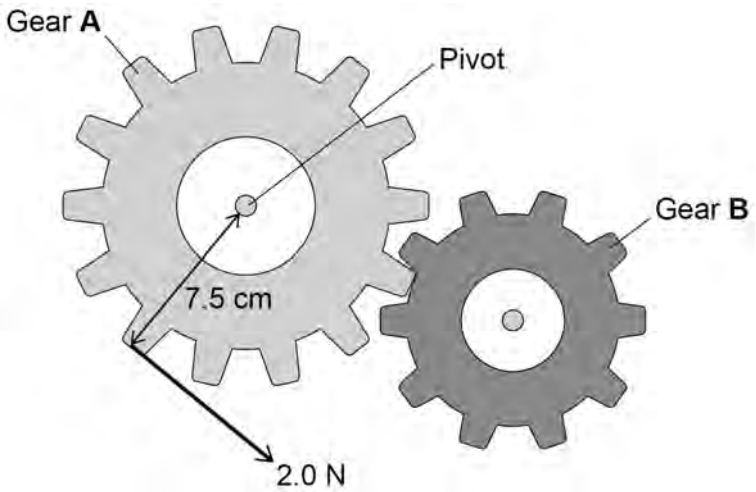

The child applies a force to gear **A**.

This causes a moment about the pivot, so gear **A** rotates.

4.5.4 Moments, levers and gears (physics only)

Question 32 · continued

Use the Physics Equations Sheet to answer questions **09.5** and **09.6**.

0 9 . 5 Write down the equation which links distance (*d*), force (*F*) and moment of a force (*M*).

[1 mark]

0 9 . 6 The child applies a force of 2.0 N on gear **A**.

The perpendicular distance between the force and the pivot is 7.5 cm.

Calculate the moment of the force about the pivot.

[3 marks]

Moment of force = _____ N m

0 9 . 7 Explain what happens to gear **B** when the child applies the force to gear **A**.

[2 marks]

14

4.5.4 Moments, levers and gears (physics only)

Question 33

June 2025 | 8463/2F | Original Q7

0 7 A 'number balance' is used to help children understand addition.

A number balance has a beam that can rotate around a pivot.

Small tags can be hung from the pegs on the beam.

Each tag has the same weight.

Figure 11 shows a number balance. The balance is in equilibrium.

Figure 11

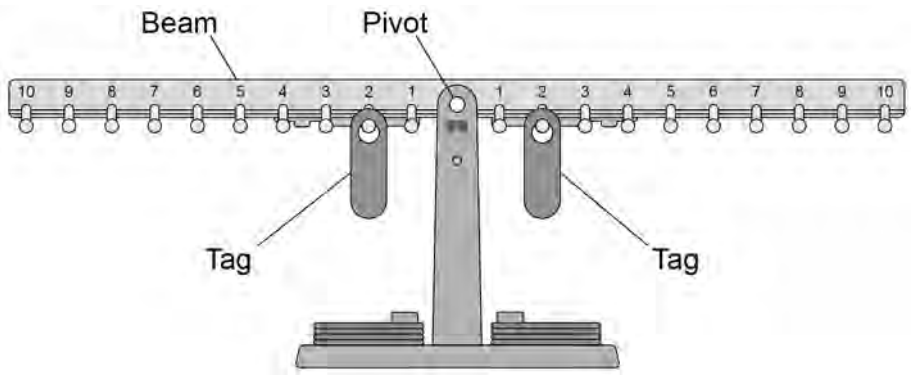

0 7 . 1 The weight of each tag on the beam in **Figure 11** causes a moment about the pivot.

What is meant by the 'moment' of a force?

[1 mark]

Tick (✓) **one** box.

The direction of the force ☐

The magnitude of the force ☐

The turning effect of the force ☐

Question 33 · continued

A student holds the beam in a horizontal position and adds a tag to position 7 to the right of the pivot.

Figure 12 shows the new arrangement.

Figure 12

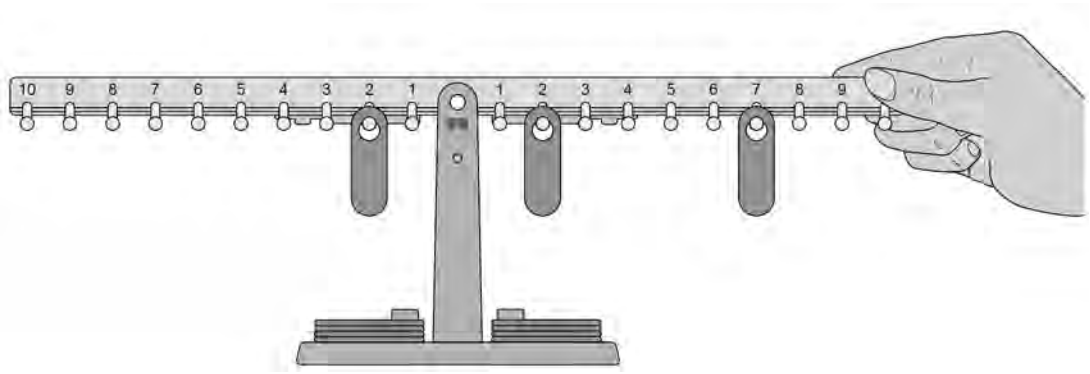

0 7 . 2 The student lets go of the beam.

Which of the following describes the resultant moment on the beam?

[1 mark]

Tick (✓) **one** box.

The resultant moment is anti-clockwise. ☐

The resultant moment is clockwise. ☐

The resultant moment is zero. ☐

0 7 . 3 Explain where the student should add another tag to make the beam in **Figure 12** balance.

[2 marks]

4.5.4 Moments, levers and gears (physics only)

Question 33 · continued

Use the Physics Equations Sheet to answer questions **07.4** and **07.5**.

0 7 . 4 Write down the equation which links distance (*d*), force (*F*) and moment of a force (*M*).

[1 mark]

0 7 . 5 One tag causes a moment about the pivot of 1.8 N cm.

The weight of the tag is 0.15 N.

Calculate the distance between the pivot and the tag.

Give your answer in cm.

[3 marks]

Distance = _____ cm

8