AQA GCSE Physics | 8463

SPECIFICATION POINT 4.3.1.2

Changes of state

Past-paper questions

Tier	**Foundation**
Question groups	**14**
Available paper years	**2007–2025**

Using this booklet

1. Answer the questions in order and show your working.
2. Original question numbers and marks are retained.
3. Print at actual size (100%) for measuring questions.
4. Use the companion answer booklet to check your work.

Name: _____ **Date:** _____

Whole questions are retained for context, so some parts assess other specification points. Current and legacy sources are labelled. Continue on extra paper if needed.

4.3.1.2 Changes of state

Question 01

6 A student had read about a glacier that had been covered in insulating material. The idea was to slow down the rate at which the glacier melts in the summer.

She investigated this idea using the apparatus shown in the diagram.

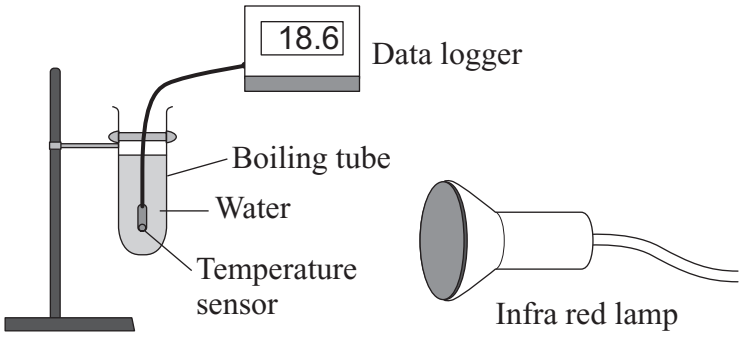

(a) These are the steps taken by the student.

- Measure 30 cm^3 of cold water into a boiling tube.
- Place the boiling tube 25 cm from an infra red lamp.
- Record the temperature of the water.
- Switch on the infra red lamp.
- Record the temperature of the water every minute for 5 minutes.
- Repeat with boiling tubes covered in different insulating materials.

(i) Why did she use an infra red lamp?

.....

(1 mark)

(ii) Name **one** control variable in this investigation.

.....

(1 mark)

(iii) Give **one** advantage of using a temperature sensor and data logger instead of a glass thermometer to measure temperature.

.....

.....

(1 mark)

Question 01 · continued

BLANK

(b) The results of the investigation are shown in the graph.

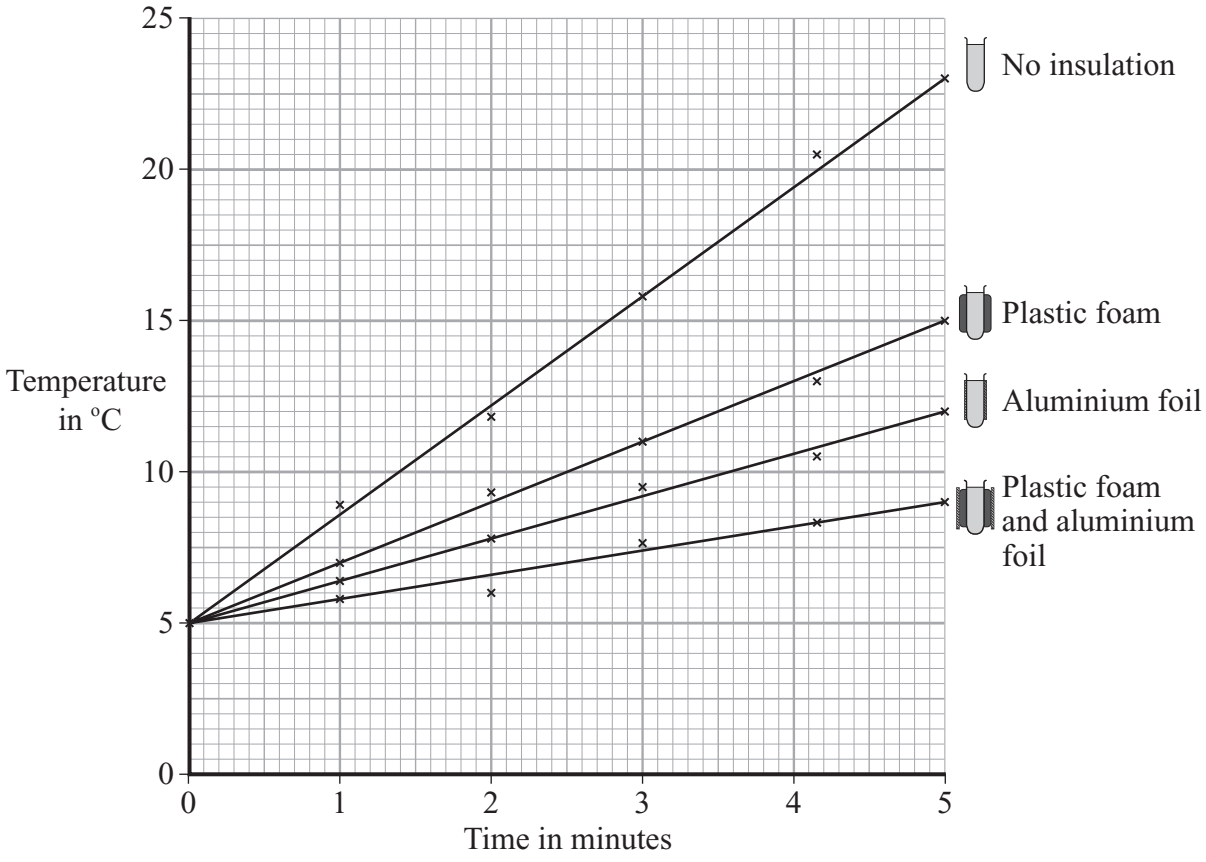

(i) Why did the student use a boiling tube with no insulation?

.....

.....

(1 mark)

(ii) From her results, what should she recommend is used to insulate the glacier?

.....

(1 mark)

Question 6 continues on the next page

4.3.1.2 Changes of state

Question 01 · continued

BLANK

(iii) Explain why the insulation recommended by the student will reduce the heat transfer from the Sun to the glacier.

.....

.....

.....

.....

.....

(2 marks)

(c) Explain, in terms of particles, how heat is transferred through the glass wall of a boiling tube.

.....

.....

.....

.....

(2 marks)

9

4.3.1.2 Changes of state

Question 02

June 2007 | PHY1A | Original Q8 | Legacy

QUESTION EIGHT

A student investigated the question: Does the type of surface affect how an object loses or gains heat? She carried out two experiments.

In her first experiment, she filled two cans with boiling water. One can had a dull, black surface. The other can had a shiny, silver surface.

Later, she measured the temperature of the water in each can.

These are her results.

	Starting temperature of the water	Temperature of the water 15 minutes later
Can with dull, black surface	100 °C	74 °C
Can with shiny, silver surface	100 °C	93 °C

8A The student wanted her experiment to be a fair test.

Which row of the table is most likely to give a fair test?

	Volume of cans	Volume of water	Metal of the cans	Shape of cans
1	same	different	same	same
2	same	same	different	same
3	same	same	same	different
4	same	same	same	same

8B If her results are reliable, the experiment shows that, compared with a shiny, silver surface, a dull, black surface is a . . .

1 better absorber of thermal radiation.

2 better conductor of thermal radiation.

3 better emitter of thermal radiation.

4 better reflector of thermal radiation.

4.3.1.2 Changes of state

Question 02 · continued

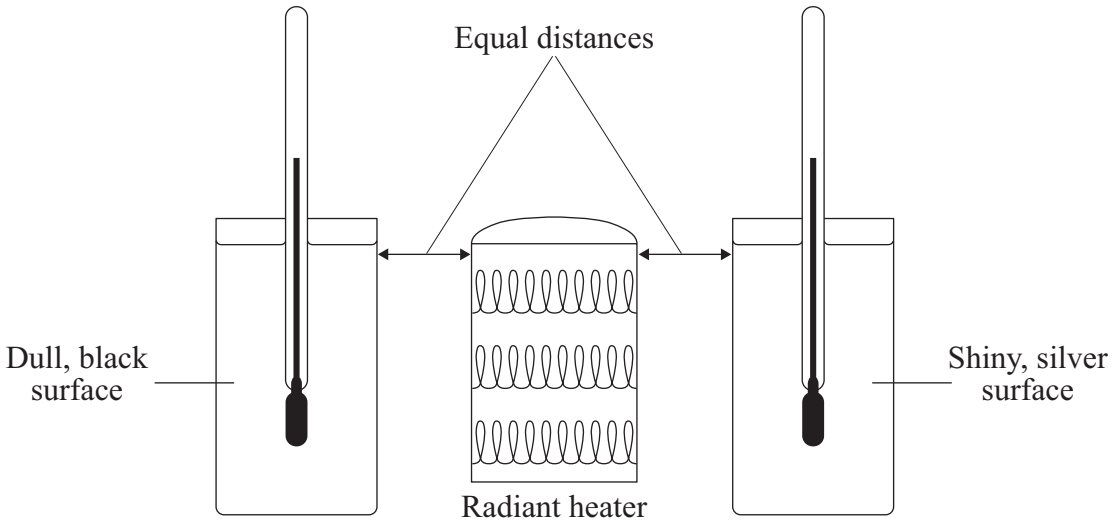

In her second experiment, the student put cold water in each can. She put a heater (which is a source of thermal radiation) between the cans. She switched the heater on and, ten minutes later, she measured the temperature of the water in each can.

These are the results of her second experiment.

	Starting temperature of the water	Temperature of the water 10 minutes later
Can with dull, black surface	16 °C	37 °C
Can with shiny, silver surface	16 °C	23 °C

8C If her results are reliable, the second experiment shows that, compared with a shiny, silver surface, a dull, black surface is a . . .

1 better absorber of thermal radiation.

2 better conductor of thermal radiation.

3 better emitter of thermal radiation.

4 better reflector of thermal radiation.

8D What was the average (mean) rate of the rise in temperature of the water in the can with a dull, black surface?

1 0.9 °C per minute

2 2.1 °C per minute

3 9 °C per minute

4 21 °C per minute

4.3.1.2 Changes of state

Question 03

June 2007 | PHY1F | Original Q3 | Legacy

3 (a) The graph shows the temperature inside a flat between 5 pm and 9 pm.
The central heating was on at 5 pm.

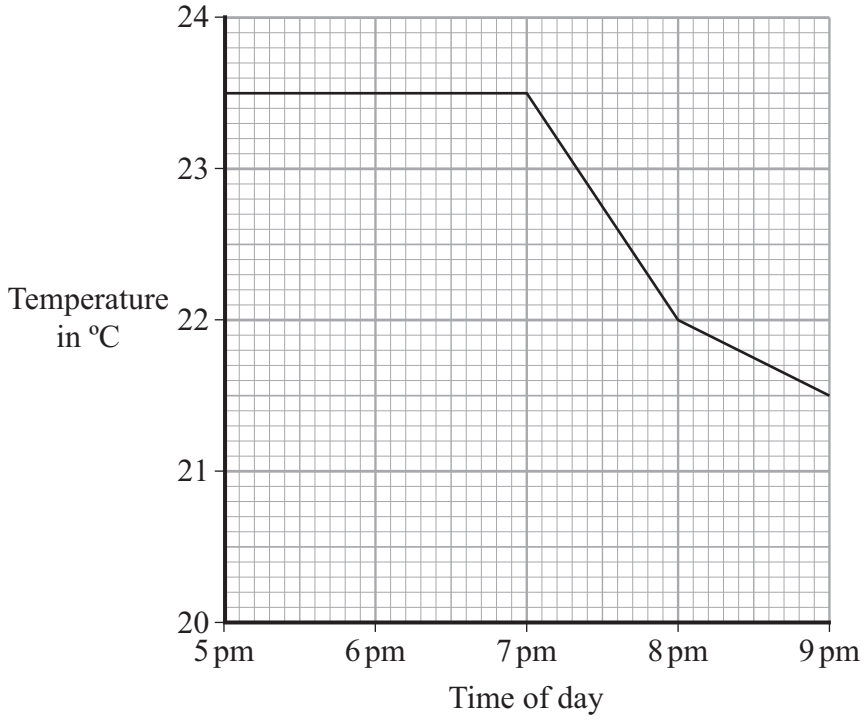

(i) What time did the central heating switch off?

.....

(1 mark)

(ii) Closing the curtains reduces heat loss from the flat.

What time do you think the curtains were closed?

.....

Give a reason for your answer.

.....

.....

(2 marks)

(b) Less heat is lost through double-glazed windows than through single-glazed windows.

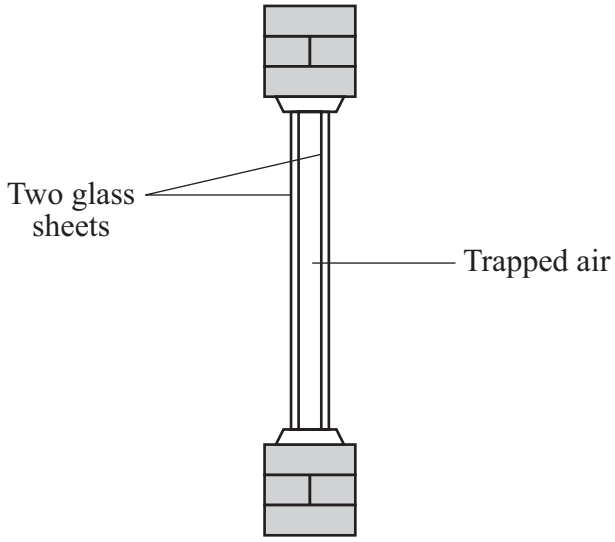

A double-glazed window

Complete the following sentences by choosing the correct words from the box.
Each word may be used once or not at all.

conduction	**conductor**	**convection**	**evaporation**	**insulator**	**radiation**

Air is a good ..... . When trapped between two sheets of glass it reduces heat loss by ..... and ..... .

(3 marks)

(c) The table gives information about three types of house insulation.

Type of insulation	Cost to install	Money saved each year on heating bills	Payback time
Double glazing	£4000	£200	20 years
Loft insulation	£300	£100	3 years
Cavity wall insulation	£600	£150	

(i) Use the information in the table to calculate the payback time for cavity wall insulation.

.....

(1 mark)

Question 3 continues on the next page

4.3.1.2 Changes of state

Question 03 · continued

BLANK

(ii) Explain why people often install loft insulation before installing double glazing or cavity wall insulation.

.....

.....

.....

.....

(2 marks)

9

4.3.1.2 Changes of state

Question 04

June 2008 | PHY1F | Original Q3 | Legacy

3 (a) The names of three types of nuclear radiation are given in **List A**. Some properties of these three types of radiation are given in **List B**.

Draw a straight line to link each type of radiation in **List A** to its correct property in **List B**. Draw only **three** lines.

List A Type of nuclear radiation	**List B** Property of radiation
alpha	not deflected by an electric field
beta	stopped by thin metal but not paper
gamma	the most strongly ionising
	will not harm living cells

(3 marks)

4.3.1.2 Changes of state

Question 04 · continued

for mark

3 (b) Nuclear radiation is given out from the centre of some types of atom.

What name is given to the centre of an atom? .....

(1 mark)

3 (c) One of the substances in the table is used as a radioactive tracer. A hospital patient breathes in air containing the tracer. The radiation given out is measured by a doctor using a detector outside the patient's body.

Substance	Radiation given out	Solid, liquid or gas
X	alpha	gas
Y	gamma	gas
Z	gamma	solid

Which **one** of the substances, **X**, **Y** or **Z**, should be used as the tracer? .....

Give **two** reasons for your answer.

1 .....

.....

2 .....

.....

(3 marks)

3 (d) Radiation can also be used to kill the bacteria on fresh food.

Give **one** reason why farmers, shop owners or consumers may want food to be treated with radiation.

.....

.....

(1 mark)

8

4.3.1.2 Changes of state

Question 05

2 (a) Most electricity in the UK is generated in power stations that burn fossil fuels.

The bar chart shows how much carbon dioxide is produced for each kilowatt-hour of electricity generated using a fossil fuel.

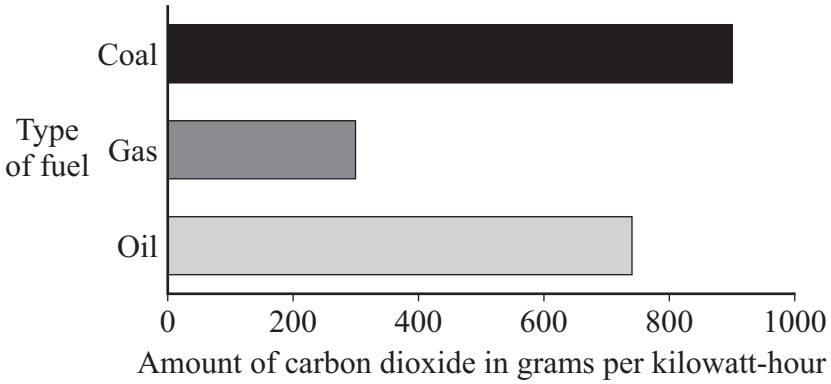

2 (a) (i) Which fossil fuel produces the smallest amount of carbon dioxide for each kilowatt-hour of electricity generated?

.....

(1 mark)

2 (a) (ii) Which **one** of the following statements gives the reason why the data has been shown as a bar chart and not as a line graph?

Put a tick (✓) in the box next to your answer.

Both variables are categoric. ☐

Both variables are continuous. ☐

One variable is categoric, the other is continuous. ☐

(1 mark)

2 (a) (iii) Why does a nuclear power station **not** produce any carbon dioxide?

.....

.....

(1 mark)

4.3.1.2 Changes of state

Question 05 · continued

for mark

2 (b) Some types of power station generate electricity by burning straw.

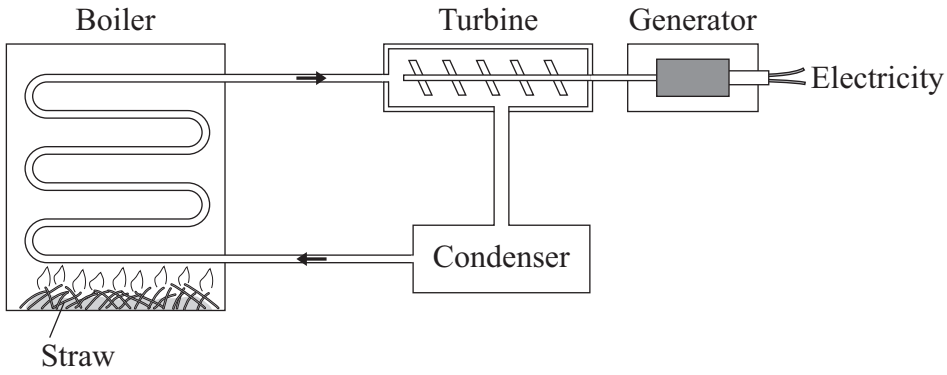

2 (b) (i) Use words from the box to complete the following sentences.

boiler	**gas**	**generator**	**steam**	**turbine**	**water**

Straw is burned in a ..... . Water is heated to make

..... which is used to drive a ..... .

This turns a ..... to produce electricity.

(4 marks)

2 (b) (ii) Straw is a type of renewable energy source known as a biofuel.

Name **one** other type of renewable energy source used to produce electricity.

.....

(1 mark)

2 (b) (iii) A power station generates 36 000 000 watts (36 MW) of electrical power by burning straw. The average power used in each home in the UK over one year is 2000 watts.

Calculate the number of homes that the power station could supply electricity to.

Show clearly how you work out your answer.

.....

.....

Number of homes = ...

(2 marks)

10

4.3.1.2 Changes of state

Question 06

June 2011 | PHY1F | Original Q5 | Legacy

5 The diagram shows four electrical appliances. Each appliance is designed to transform electrical energy into one form of output energy.


Kettle


Toaster

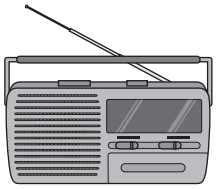
Radio

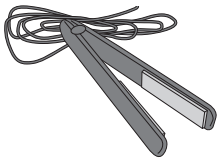
Hair straighteners

5 (a) Which **one** of the appliances is designed to give a different form of output energy from the other three appliances?

.....

Give a reason for your answer.

.....

.....

(2 marks)

5 (b) The power of each appliance is given in the table.

Appliance	Power
Kettle	2.5 kW
Toaster	920 W
Radio	15 W
Hair straighteners	75 W

Each appliance is switched on for 5 minutes.

Which appliance transforms the most energy?

.....

(1 mark)

4.3.1.2 Changes of state

Question 06 · continued

5 (c) The 75 watt hair straighteners are switched on for a few minutes each day.
In one year, the amount of energy transferred from the mains electricity supply to the hair straighteners is 4 kilowatt-hours.

Electricity costs 15 p per kilowatt-hour.

Use the equation in the box to calculate the yearly cost of using the hair straighteners.

total cost = number of kilowatt-hours × cost per kilowatt-hour

Show clearly how you work out your answer.

.....

.....

Total cost = ... pence
(2 marks)

Question 5 continues on the next page

4.3.1.2 Changes of state

Question 06 · continued

5 (d) The graph shows how the time to boil water in an electric kettle depends on the volume of water in the kettle.

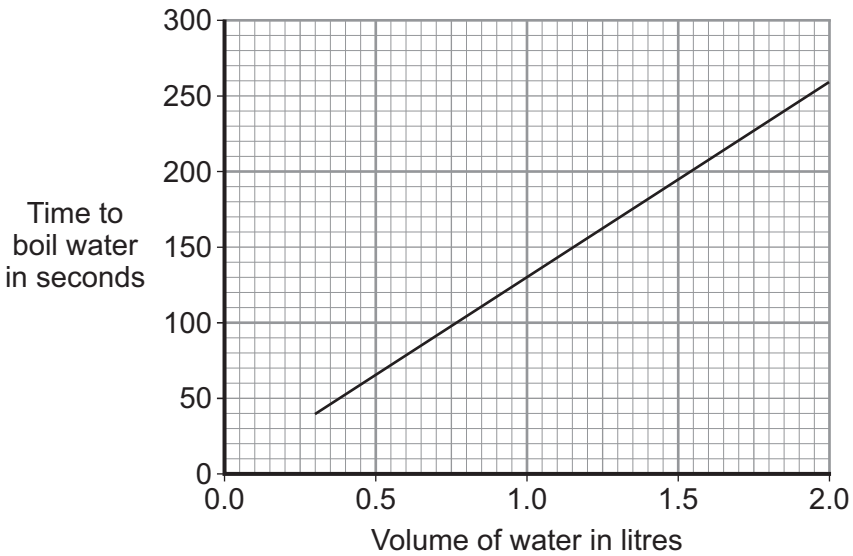

A householder always fills the electric kettle to the top, even when only enough boiling water for one small cup of coffee is required.

Explain how the householder is wasting money.

.....

.....

.....

.....

.....

.....

(3 marks)

8

4.3.1.2 Changes of state

Question 07

November 2011 | PHY1AP | Original Q9 | Legacy

QUESTION NINE

A student wanted to find out if the width of the air gap in a double-glazed window affects the rate of heat transfer through the window.

He predicted that the wider the air gap, the lower the rate of heat transfer. To test his prediction, he set up the following experiment.

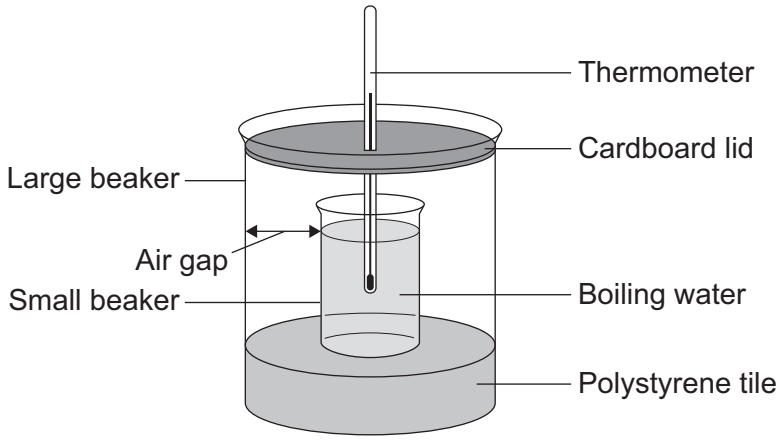

- He put a small beaker inside a large beaker.
- He put 80 cm^3 of boiling water into the small beaker.
- He put a cardboard lid on the large beaker.
- He used a stopwatch to measure the time taken for the water to cool by 20 °C.
- He measured the diameter of each beaker and calculated the width of the air gap.
- He used different sizes of large beaker to change the width of the air gap. Each time, he used the same small beaker and the same thermometer.
- He plotted his results on a graph.

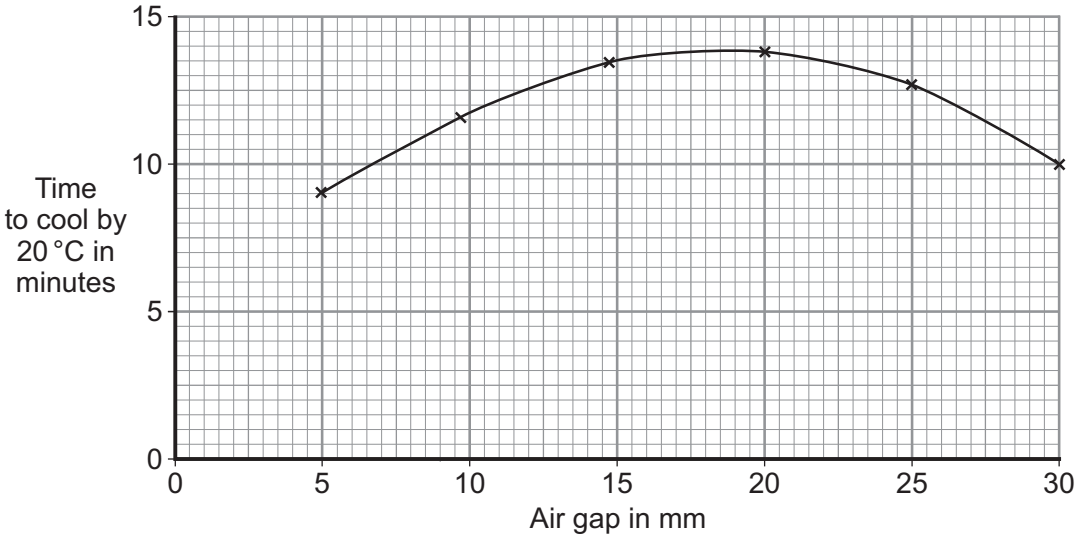

4.3.1.2 Changes of state

Question 07 · continued

9A Which was the independent variable in the experiment?

1 the time taken for the water to cool by 20 °C

2 the size of the small beaker

3 the size of the cardboard lid

4 the width of the air gap

9B Which of these helped to make the test fair?

1 He used the same small beaker each time and changed the large beaker.

2 He used the same large beaker each time and changed the small beaker.

3 He changed the size of both beakers to keep the same width of air gap each time.

4 He changed the size of both beakers to change the width of air gap every time.

9C The results did not support the student's prediction.

What should he do to improve the reliability of the experiment?

1 join the points on the graph dot to dot

2 repeat each measurement and calculate the mean

3 use a more accurate stopwatch

4 use a more accurate thermometer

9D Which of these conclusions can be made from the student's results?

1 The rate of cooling is greatest when the air gap is between 15 mm and 22 mm.

2 The wider the air gap, the faster the water cools.

3 The narrower the air gap, the faster the water cools.

4 The rate of cooling is least when the air gap is between 15 mm and 22 mm.

END OF TEST

4.3.1.2 Changes of state

Question 08

June 2013 | PH2FP | Original Q5 | Legacy

5 Nuclear power stations use the energy released from nuclear fuels to generate electricity.

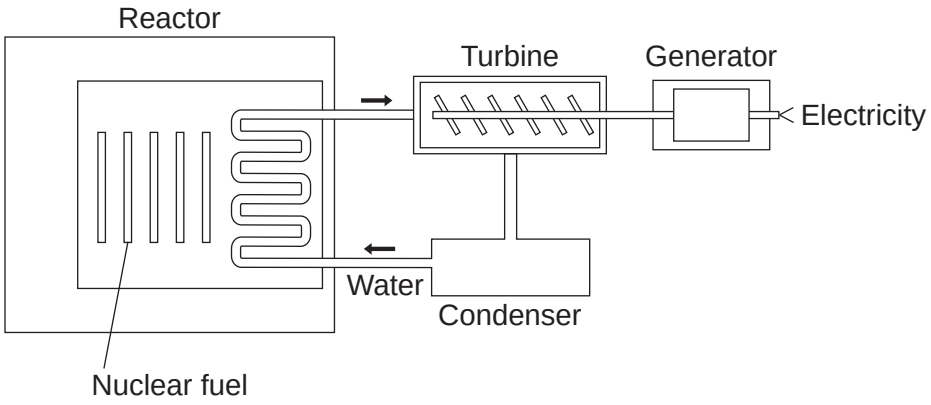

5 (a) Which substance do the majority of nuclear reactors use as fuel?

Draw a ring around your answer.

plutonium-239 **thorium-232** **uranium-235**

(1 mark)

5 (b) Energy is released from nuclear fuels by the process of nuclear fission.

Describe what happens to the nucleus of an atom during nuclear fission.

.....

.....

.....

.....

(2 marks)

5 (c) Use words from the box to complete each sentence.

condenser	**gas**	**generator**	**reactor**	**steam**	**turbine**

The energy released from the nuclear fuel is used to heat water. The water turns into

..... and this is used to drive a ..... .

This turns a ..... to produce electricity.

(3 marks)

6

4.3.1.2 Changes of state

Question 09

June 2014 | PH1FP | Original Q3 | Legacy

3 Energy can be transferred through some materials by convection.

3 (a) Use the correct answer from the box to complete the sentence.

[1 mark]

gas	liquid	solid

Energy **cannot** be transferred by convection through a ..... .

3 (b) **Figure 4** shows a fridge with a freezer compartment.

The temperature of the air inside the freezer compartment is –5 °C.

Figure 4

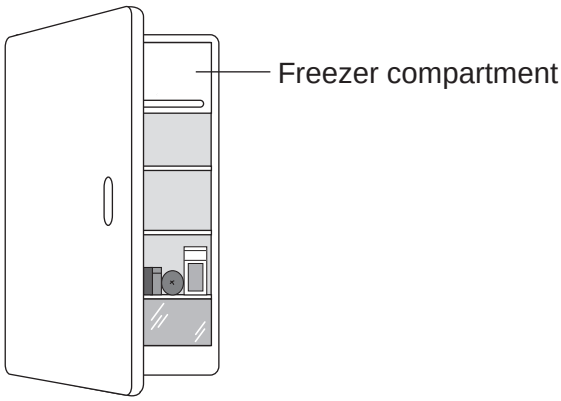

Use the correct answer from the box to complete each sentence.

Each answer may be used once, more than once or not at all.

[3 marks]

decreased	unchanged	increased

When the air near the freezer compartment is cooled, the energy of the air particles is ..... .

The spaces between the air particles are ..... .

The density of the air is ..... .

4.3.1.2 Changes of state

Question 09 · continued

3 (c) **Table 1** shows some information about three fridges, **A**, **B** and **C**.

The efficiency of each fridge is the same.

Table 1

Fridge	Volume in litres	Energy used in one year in kWh
A	232	292
B	382	409
C	622	524

3 (c) (i) Which fridge, **A**, **B** or **C**, would cost the least to use for 1 year?

[2 marks]

Give **one** reason for your answer.

.....

.....

3 (c) (ii) A householder looks at the data in **Table 1**.

What should she conclude about the pattern linking the volume of the fridge and the energy it uses in one year?

[1 mark]

.....

.....

3 (c) (iii) The householder could not be certain that her conclusion is correct for all fridges.

Suggest **one** reason why not.

[1 mark]

.....

.....

8

4.3.1.2 Changes of state

Question 10

June 2016 | PH1FP | Original Q4 | Legacy

4 A student investigated the cooling effect of evaporation.

She used the equipment (datalogger and probe) in **Figure 5** to measure how the temperature of a liquid changed as the liquid evaporated.

Figure 5

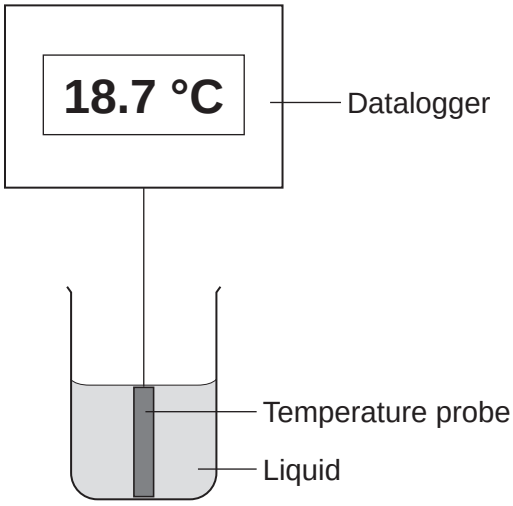

4 (a) Which type of variable was the temperature in this investigation?

[1 mark]

Tick (✓) **one** box.

	Tick (✓)
control	
dependent	
independent	

4 (b) The student could have used the thermometer shown in **Figure 6**.

Figure 6

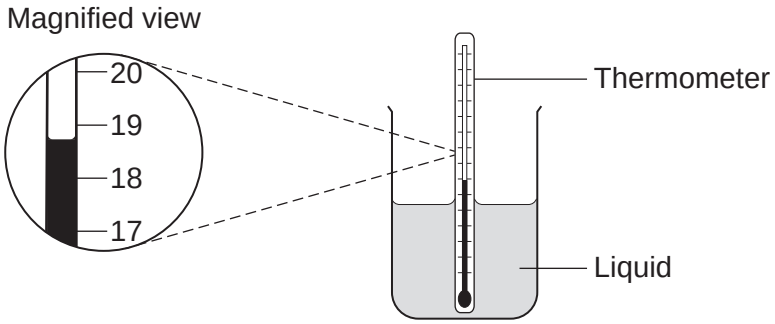

How does the resolution of the equipment in **Figure 5** compare with the resolution of the thermometer?

[1 mark]

Tick (✓) **one** box.

	Tick (✓)
The equipment has a better resolution.	
The equipment has a worse resolution.	
The equipment has the same resolution.	

4 (c) Before the investigation started, the student checked the accuracy of three different temperature probes. The student put the probes in a beaker of boiling water that had a temperature of 100.0 °C.
Figure 7 shows the readings from the three temperature probes.

Figure 7

Probe A	Probe B	Probe C
99.8	**100.1**	**103.2**

Which **one** of the temperature probes, **A**, **B** or **C**, was **least** accurate?

[2 marks]

Write the correct answer in the box.

Give a reason for your answer.

Question 4 continues on the next page

4.3.1.2 Changes of state

Question 10 · continued

4 (d) **Figure 8** shows how the temperature recorded changed during the investigation.

Figure 8

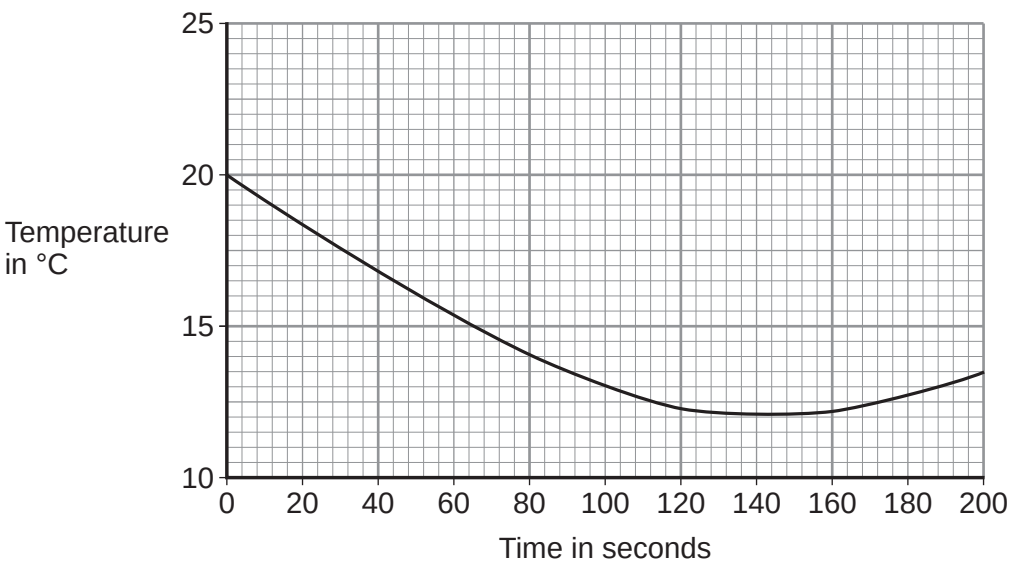

4 (d) (i) Use **Figure 8** to determine the lowest temperature recorded as the liquid evaporated.

[1 mark]

Temperature = _____ °C

4 (d) (ii) Use **Figure 8** to determine how long it took for all the liquid to evaporate.
Give a reason for your answer.

[2 marks]

Time = _____ seconds

Reason: _____

_____

4 (d) (iii) How would increasing the starting temperature of the liquid above 20 °C affect the rate of evaporation of the liquid?

[1 mark]

_____

_____

8

4.3.1.2 Changes of state

Question 11

November 2021 | 8463/1F | Original Q1

0 1 . 1 A student investigated the three states of matter.

The arrangement of particles in the three states of matter are different.

Draw **one** line from each particle arrangement to the state of matter.

[2 marks]

Particle arrangement	State of matter
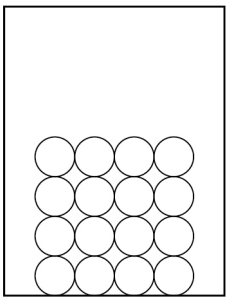	Solid
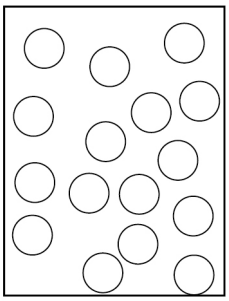	Liquid
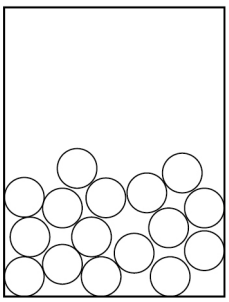	Gas

4.3.1.2 Changes of state

Question 11 · continued

A large lump of ice was heated and changed state.

Figure 1 shows how the temperature varied with time.

Figure 1

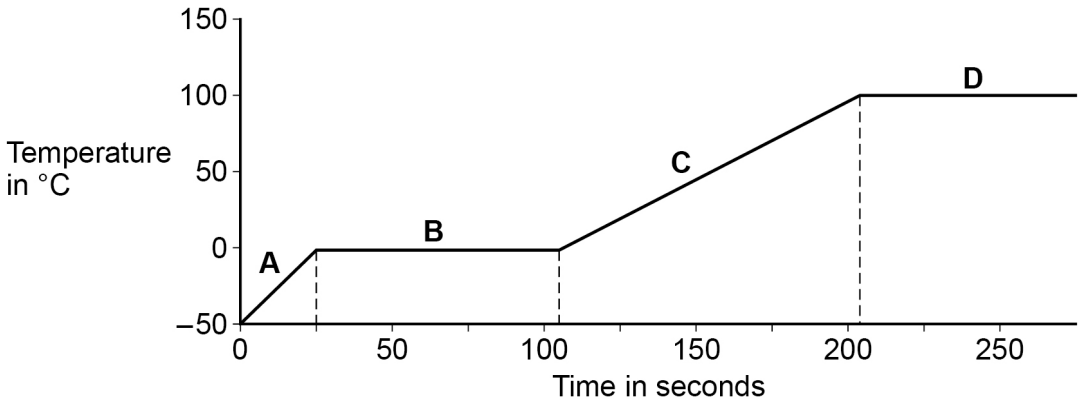

0 1 . 2 Which part of **Figure 1** shows when the ice was melting?

[1 mark]

Tick (✓) **one** box.

A ☐ **B** ☐ **C** ☐ **D** ☐

0 1 . 3 Which part of **Figure 1** shows when the water was boiling?

[1 mark]

Tick (✓) **one** box.

A ☐ **B** ☐ **C** ☐ **D** ☐

Question 1 continues on the next page

4.3.1.2 Changes of state

Question 11 · continued

0 1 . 4 Which property of the water particles changes as the temperature of the water increases?

[1 mark]

Tick (✓) **one** box.

The kinetic energy of the particles ☐

The mass of each particle ☐

The number of particles ☐

0 1 . 5 Calculate the thermal energy needed to melt 0.250 kg of ice at 0 °C.

specific latent heat of fusion of water = 334 000 J/kg

Use the equation:

thermal energy = mass × specific latent heat

[2 marks]

Thermal energy = _____ J

4.3.1.2 Changes of state

Question 11 · continued

0 1 . 6 Complete the sentence.

Choose the answer from the box.

[1 mark]

condenses	**evaporates**	**ionises**	**sublimates**

A substance is heated and changes directly from a solid to a gas.

The substance _____ .

8

Turn over for the next question

4.3.1.2 Changes of state

Question 12

June 2022 | 8463/1F | Original Q5

0 5 A student determined the specific latent heat of vaporisation of water.

Figure 6 shows some of the equipment used.

Figure 6

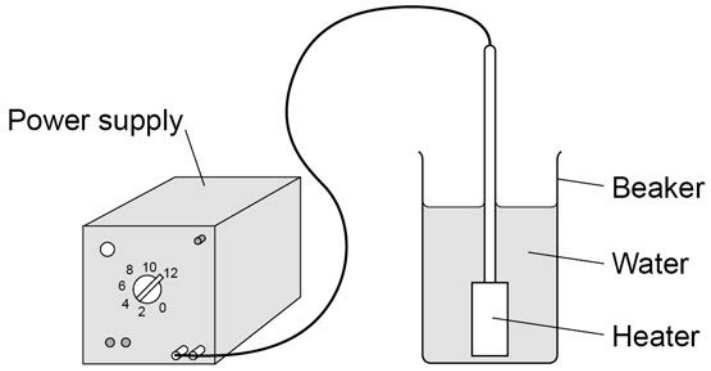

0 5 . 1 The student measured a mass of water and put it into the beaker.

What measuring instrument should the student have used to measure the mass of the water?

[1 mark]

Tick (✓) **one** box.

balance ☐

joulemeter ☐

newtonmeter ☐

thermometer ☐

4.3.1.2 Changes of state

Question 12 · continued

0 5 . 2 The power output of the heater stayed the same throughout the experiment.

What type of variable was the power output of the heater?

[1 mark]

Tick (✓) **one** box.

- Categoric variable ☐
- Control variable ☐
- Dependent variable ☐
- Independent variable ☐

0 5 . 3 The student turned on the heater and heated the water until it reached boiling point.

The student continued to heat the water so that it boiled for several minutes.

The mass of the water remaining in the beaker was measured again.

Give **one** way the beaker of boiling water could be moved safely to measure its new mass.

[1 mark]

Question 5 continues on the next page

Question 12 · continued

0 5 . 4 The mass of water that turned into steam was 0.0090 kg.

The heater transferred 25 200 J of energy to the water to turn it into steam.

Calculate the specific latent heat of vaporisation of water given by the student's data.

Use the Physics Equations Sheet.

Choose the unit from the box.

[4 marks]

J	kg	J/kg

Specific latent heat of vaporisation = _____ Unit _____

0 5 . 5 What was a source of error in the student's experiment?

[1 mark]

Tick (✓) **one** box.

- The transfer of thermal energy from the heater to the water ☐
- The transfer of thermal energy from the surroundings to the water ☐
- The transfer of thermal energy from the water to the heater ☐
- The transfer of thermal energy from the water to the surroundings ☐

8

4.3.1.2 Changes of state

Question 13

June 2023 | 8463/1F | Original Q10

1 0 **Figure 14** shows an electrical circuit used to heat the windscreen of a car.

Each resistor in the circuit represents a heating element.

Figure 14

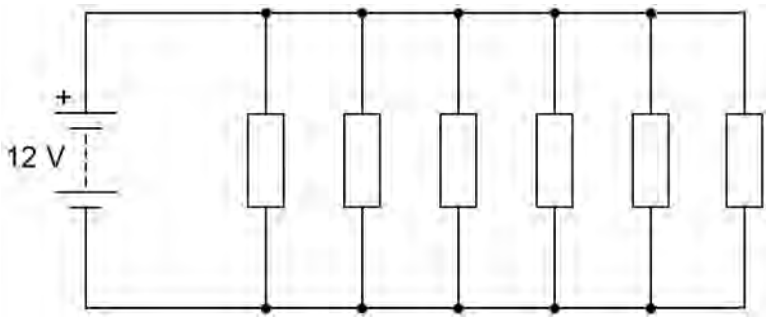

1 0 . 1 The 12 V battery supplies direct potential difference.

What is meant by 'direct potential difference'?

[1 mark]

Use the Physics Equations Sheet to answer questions **10.2** and **10.3**.

1 0 . 2 Which equation links charge flow (Q), energy (E) and potential difference (V)?

[1 mark]

Tick (✓) **one** box.

$E = \frac{V}{Q}$ ☐

$E = QV$ ☐

$E = \frac{Q}{V}$ ☐

$E = \frac{V^2}{Q}$ ☐

4.3.1.2 Changes of state

Question 13 · continued

10.3 Calculate the charge flow through the 12 V battery when the battery transfers 5010 J of energy.

[3 marks]

Charge flow = _____ C

10.4 Ice forms on the windscreen at a temperature of 0 °C.

The electrical circuit transfers 5010 J of energy to the ice.

A mass of 0.015 kg of ice melts.

Calculate the specific latent heat of fusion of water.

Use the Physics Equations Sheet.

[3 marks]

Specific latent heat of fusion of water = _____ J/kg

4.3.1.2 Changes of state

Question 13 · continued

10.5 The electrical circuit was left switched on while the ice changed from a solid to a liquid and increased in temperature to 5 °C.

Explain the changes in the arrangement **and** movement of the particles as the ice melted and the temperature increased to 5 °C.

[6 marks]

14

4.3.1.2 Changes of state

Question 14

0 4 A teacher demonstrated how the pressure in a gas varies with temperature.

Figure 7 shows some of the apparatus used.

Figure 7

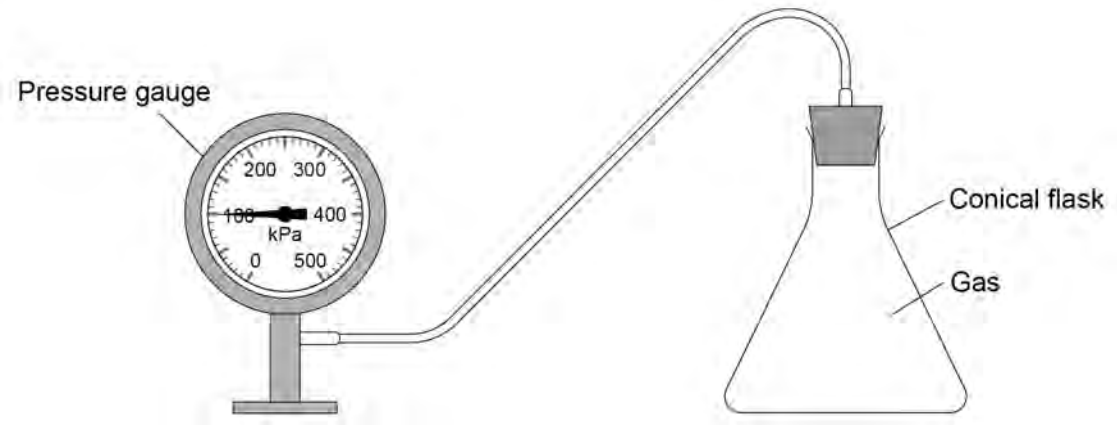

The teacher heated the conical flask.

The temperature of the gas in the flask increased.

0 4 . 1 How did heating the gas affect the average speed of the gas particles?

[1 mark]

Tick (✓) **one** box.

The speed decreased. ☐

The speed stayed the same. ☐

The speed increased. ☐

4.3.1.2 Changes of state

Question 14 · continued

0 4 . 2 How did heating the gas affect the average kinetic energy of the gas particles?

[1 mark]

Tick (✓) **one** box.

The kinetic energy decreased. ☐

The kinetic energy stayed the same. ☐

The kinetic energy increased. ☐

As the temperature of the gas increased, the pressure of the gas inside the flask increased.

0 4 . 3 How did increasing the pressure affect the number of collisions each second between gas particles and the walls of the flask?

[1 mark]

Tick (✓) **one** box.

The number of collisions each second decreased. ☐

The number of collisions each second stayed the same. ☐

The number of collisions each second increased. ☐

Question 4 continues on the next page

Question 14 · continued

0 4 . 4 What happened to the force exerted on the walls of the flask by the gas particles when the pressure increased?

[1 mark]

Tick (✓) **one** box.

The force exerted decreased. ☐

The force exerted stayed the same. ☐

The force exerted increased. ☐

0 4 . 5 At different temperatures, nitrogen can be a gas, a liquid or a solid.

Draw **one** line from the state of matter to the arrangement of particles in each state.

[2 marks]

State of matter	Arrangement of particles
Liquid	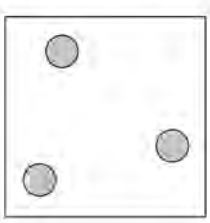
Solid	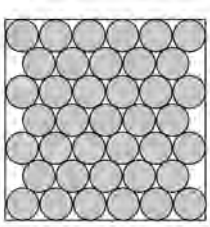
Gas	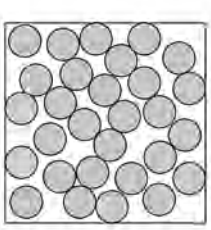

4.3.1.2 Changes of state

Question 14 · continued

0 4 . 6 The boiling point of nitrogen is –196 °C and the melting point of nitrogen is –210 °C.

What is the state of matter of nitrogen at a temperature of –200 °C?

[1 mark]

Tick (✓) **one** box.

Solid ☐ Liquid ☐ Gas ☐

0 4 . 7 What is the state of matter of nitrogen when the temperature is lower than the melting point of nitrogen?

[1 mark]

Tick (✓) **one** box.

Solid ☐ Liquid ☐ Gas ☐

0 4 . 8 As a substance melts, the temperature of the substance is constant.

What happens to the kinetic energy **and** the potential energy of the particles as the substance melts?

[2 marks]

Tick (✓) **one** box in each row.

	Decreases	Stays the same	Increases
Kinetic energy of particles			
Potential energy of particles			

10