AQA GCSE Physics | 8463

SPECIFICATION POINT 4.2.2

Series and parallel circuits

Past-paper questions

Tier	**Foundation**
Question groups	**10**
Available paper years	**2005–2021**

Using this booklet

1. Answer the questions in order and show your working.
2. Original question numbers and marks are retained.
3. Print at actual size (100%) for measuring questions.
4. Use the companion answer booklet to check your work.

Name: _____ **Date:** _____

Whole questions are retained for context, so some parts assess other specification points. Current and legacy sources are labelled. Continue on extra paper if needed.

4.2.2 Series and parallel circuits

Question 01

June 2005 | 3451 | Original Q9 | Legacy

9 (a) Name each of the following circuit symbols.



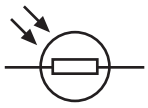

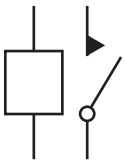

....

(3 marks)

(b) The diagram shows a circuit.

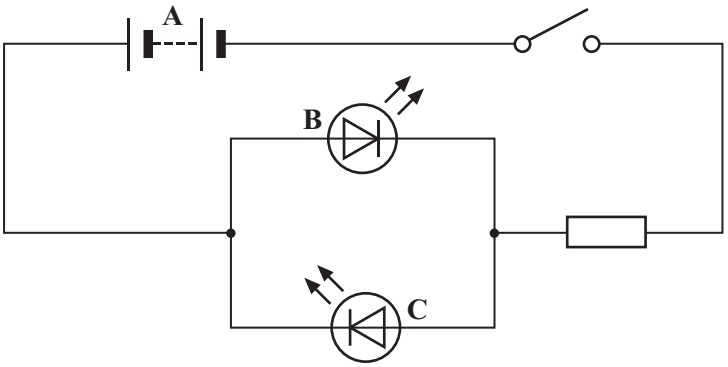

(i) Name part **A**.

.....

(1 mark)

(ii) Name part **B**.

.....

(1 mark)

(iii) What will you see happen when the switch is closed?

.....

.....

(1 mark)

(iv) Explain your answer to part (b)(iii).

.....

.....

(1 mark)

4.2.2 Series and parallel circuits

Question 01 · continued

1 /

MARGIN BLANK

(c) (i) Complete the table for an AND gate.

First input	Second input	Output
0	0	.....
1	0	.....
0	1	.....
1	1	.....

(1 mark)

(ii) What is this sort of table called?

.....

(1 mark)

(iii) Draw the circuit symbol for an AND gate.

(1 mark)

(d) In another circuit, two electronic components are connected in series. The table shows the output from them when it is dark and when it is light.

Condition	Output
Dark	1
Light	0

Complete the boxes by adding the names of **two** suitable components in their correct order.

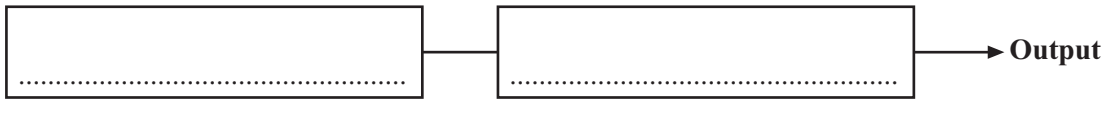

(2 marks)

12

4.2.2 Series and parallel circuits

Question 02

January 2009 | PHY2F | Original Q4 | Legacy

4 (a) The diagram shows the circuit used by a student to measure the power of a filament lamp.

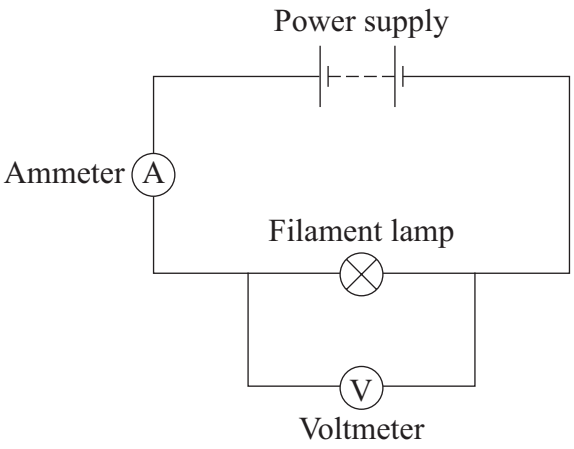

Name a component connected in parallel with the filament lamp.

.....

(1 mark)

4 (b) By adding another component to the circuit, the student is able to obtain a range of ammeter and voltmeter readings.

Ammeter reading in amps	Voltmeter reading in volts
0.10	1.0
0.15	2.0
0.20	4.0
0.25	7.0
0.30	11.0

4.2.2 Series and parallel circuits

Question 02 · continued

for mark

4 (b) (i) Which **one** of the following components did the student add to the circuit?

Draw a ring around your answer.

fuse **switch** **variable resistor**

(1 mark)

4 (b) (ii) What is the range of ammeter readings taken by the student?

from ..... amps to ..... amps

(1 mark)

4 (b) (iii) Use the data in the table and the equation in the box to calculate the **maximum** power of the filament lamp.

power (watt, W)	=	current (ampere, A)	×	potential difference (volt, V)

Show clearly how you work out your answer.

.....

.....

Power = ... W

(3 marks)

4 (c) Complete the following sentence by drawing a ring around the correct line in the box.

As the temperature of a filament lamp increases, its resistance

increases
remains constant
decreases

.

(1 mark)

7

4.2.2 Series and parallel circuits

Question 03

June 2019 | PHY2F | Original Q2 | Legacy

2 Complete each of the following sentences, **A**, **B**, **C**, **D** and **E**, by choosing the correct ending from **K**, **L**, **M**, **N** or **O**.

The first one has been done for you.

A The current through a resistor depends ..... **O**

B A direct current ..... ☐

C In a series circuit, the potential difference ..... ☐

D An alternating current ..... ☐

E In a parallel circuit, the potential difference ..... ☐

K ..... across each component is the same.

L ..... is supplied by a cell or battery.

M ..... is constantly changing direction.

N ..... of the power supply is shared by the components.

O ..... on the potential difference across the resistor.

(3 marks)

3

4.2.2 Series and parallel circuits

Question 04

January 2013 | PH2FP | Original Q3 | Legacy

3 (a) Electrical circuits often contain resistors.
The diagram shows **two** resistors joined in series.



Calculate the total resistance of the **two** resistors.

.....

Total resistance = ... Ω
(1 mark)

3 (b) A circuit was set up as shown in the diagram. The three resistors are identical.

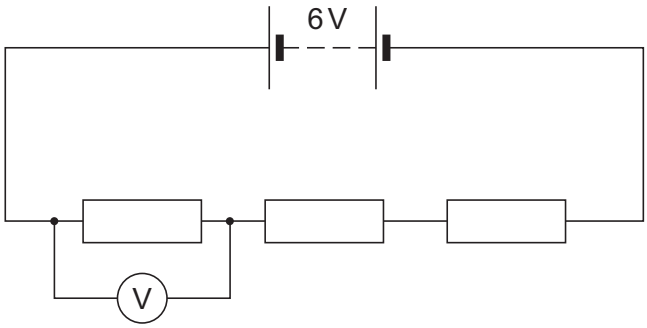

3 (b) (i) Calculate the reading on the voltmeter.

.....

.....

Reading on voltmeter = ... V
(2 marks)

4.2.2 Series and parallel circuits

Question 04 · continued

3 (b) (ii) The same circuit has now been set up with two ammeters.

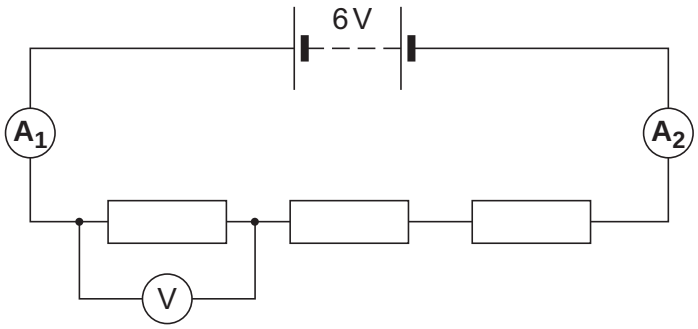

Draw a ring around the correct answer in the box to complete the sentence.

The reading on ammeter $\mathbf{A_2}$ will be

smaller than
equal to
greater than

the reading on ammeter $\mathbf{A_1}$.

(1 mark)

4

4.2.2 Series and parallel circuits

Question 05

June 2014 | PH2FP | Original Q3 | Legacy

3 (a) Draw **one** line from each circuit symbol to its correct name.

[3 marks]

Circuit symbol	Name
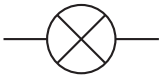	Diode
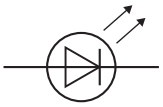	Light-dependent resistor (LDR)
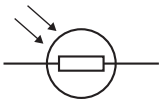	Lamp
	Light-emitting diode (LED)

Question 05 · continued

3 (b) **Figure 5** shows three circuits.

The resistors in the circuits are identical.

Each of the cells has a potential difference of 1.5 volts.

Figure 5

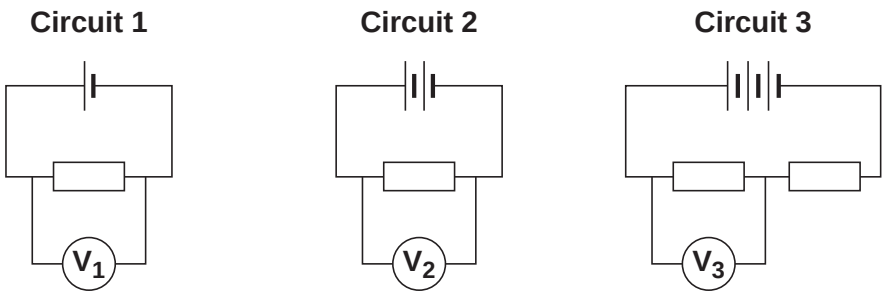

3 (b) (i) Use the correct answer from the box to complete the sentence.

[1 mark]

half	twice	the same as

The resistance of **circuit 1** is ..... the resistance of **circuit 3**.

3 (b) (ii) Calculate the reading on voltmeter $\mathbf{V_2}$.

[1 mark]

.....

Voltmeter reading $\mathbf{V_2}$ = ... V

3 (b) (iii) Which voltmeter, $\mathbf{V_1}$, $\mathbf{V_2}$ or $\mathbf{V_3}$, will give the lowest reading?

Draw a ring around the correct answer.

[1 mark]

$\mathbf{V_1}$ $\mathbf{V_2}$ $\mathbf{V_3}$

Question 3 continues on the next page

Question 05 · continued

3 (c) A student wanted to find out how the number of resistors affects the current in a series circuit.

Figure 6 shows the circuit used by the student.

Figure 6

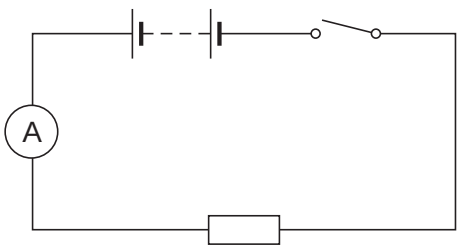

The student started with one resistor and then added more identical resistors to the circuit.

Each time a resistor was added, the student closed the switch and took the ammeter reading.

The student used a total of 4 resistors.

Figure 7 shows three of the results obtained by the student.

Figure 7

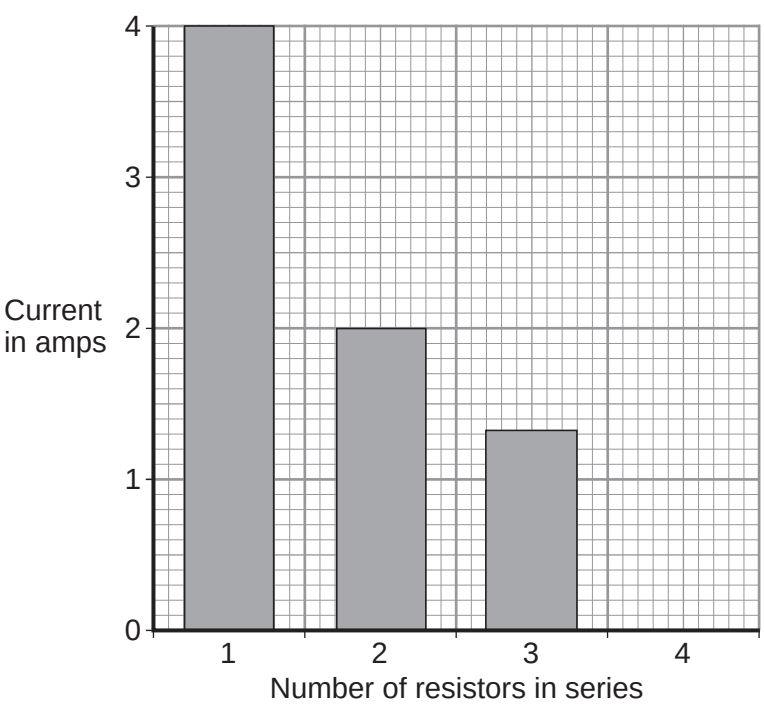

4.2.2 Series and parallel circuits

Question 05 · continued

3 (c) (i) To get valid results, the student kept one variable the same throughout the experiment.

Which variable did the student keep the same?

[1 mark]

.....

3 (c) (ii) The bar chart in **Figure 7** is not complete. The result using 4 resistors is not shown.

Complete the bar chart to show the current in the circuit when 4 resistors were used.

[2 marks]

3 (c) (iii) What conclusion should the student make from the bar chart?

[1 mark]

.....

.....

10

4.2.2 Series and parallel circuits

Question 06

June 2016 | PH2FP | Original Q2 | Legacy

2 (a) **Figure 2** shows the oscilloscope trace an alternating current (a.c.) electricity supply produces.

Figure 2

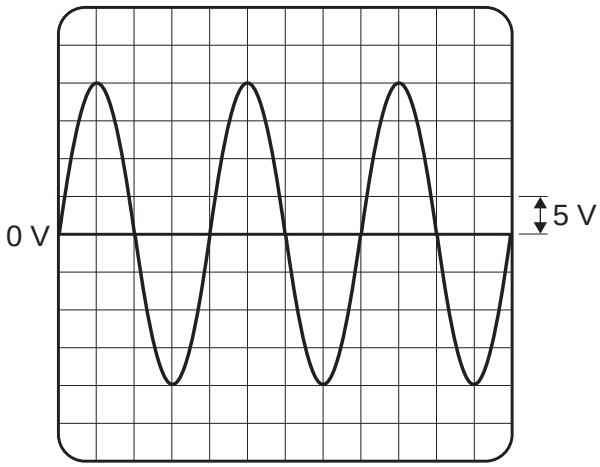

One vertical division on the oscilloscope screen represents 5 volts.

Calculate the peak potential difference of the electricity supply.

[1 mark]

Peak potential difference = _____ V

2 (b) Use the correct answer from the box to complete the sentence.

[1 mark]

40	**50**	**60**

In the UK, the frequency of the a.c. mains electricity supply is _____ hertz.

2 (c) **Figure 3** shows how two lamps may be connected in series or in parallel to the 230 volt mains electricity supply.

Figure 3

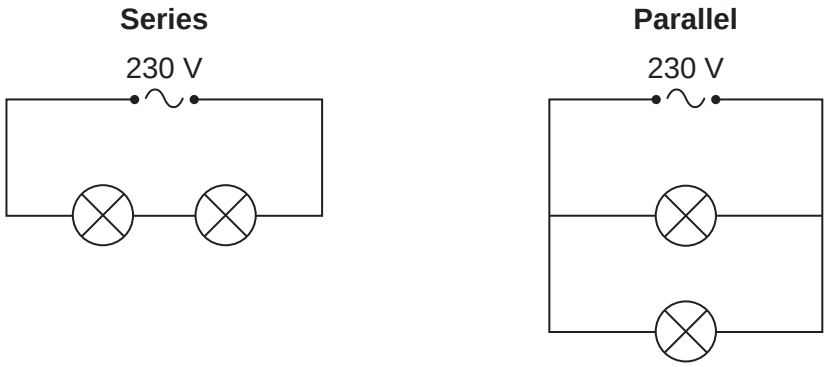

2 (c) (i) Calculate the potential difference across each lamp when the lamps are connected in **series**.
The lamps are identical.

[1 mark]

Potential difference when in series = _____ V

2 (c) (ii) What is the potential difference across each lamp when the lamps are connected in **parallel**?

[1 mark]

Tick (✓) **one** box.

115 V ☐ 230 V ☐ 460 V ☐

2 (c) (iii) Give **one** advantage of connecting the lamps in parallel instead of in series.

[1 mark]

Question 2 continues on the next page

2 (d) **Figure 4** shows the light fitting used to connect a filament light bulb to the mains electricity supply.

Figure 4

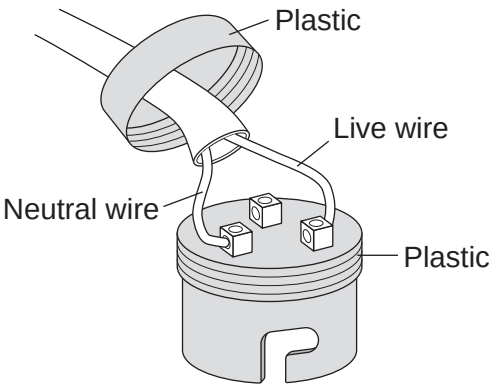

The light fitting does **not** have an earth wire connected.

Explain why the light fitting is safe to use.

[2 marks]

2 (e) A fuse can be used to protect an electrical circuit.

Name a different device that can also be used to protect an electrical circuit.

[1 mark]

8

4.2.2 Series and parallel circuits

Question 07

June 2017 | PH2FP | Original Q3 | Legacy

3 **Figure 4** shows a lamp and an 18 Ω resistor connected in a series circuit.

Figure 4

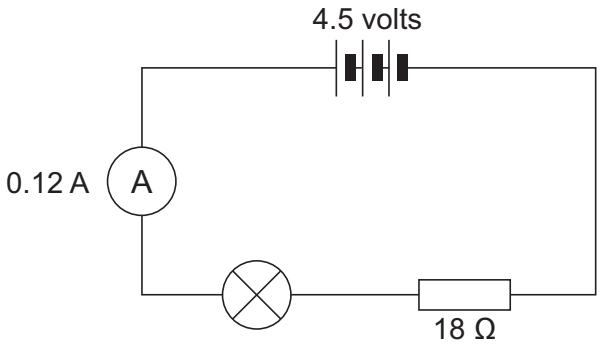

3 (a) (i) Calculate the potential difference (***V***) across the 18 Ω resistor.

Use the correct equation from the Physics Equations Sheet.

[2 marks]

_____

_____

Potential difference (***V***) = _____ volts

3 (a) (ii) How would you calculate the potential difference across the lamp?

[1 mark]

Tick (✓) **one** box.

4.5 – ***V*** ☐

4.5 + ***V*** ☐

$\frac{4.5}{V}$ ☐

4.2.2 Series and parallel circuits

Question 07 · continued

3 (b) **Figure 5** shows the current-potential difference graphs for three electrical components, **A**, **B** and **C**.

Figure 5

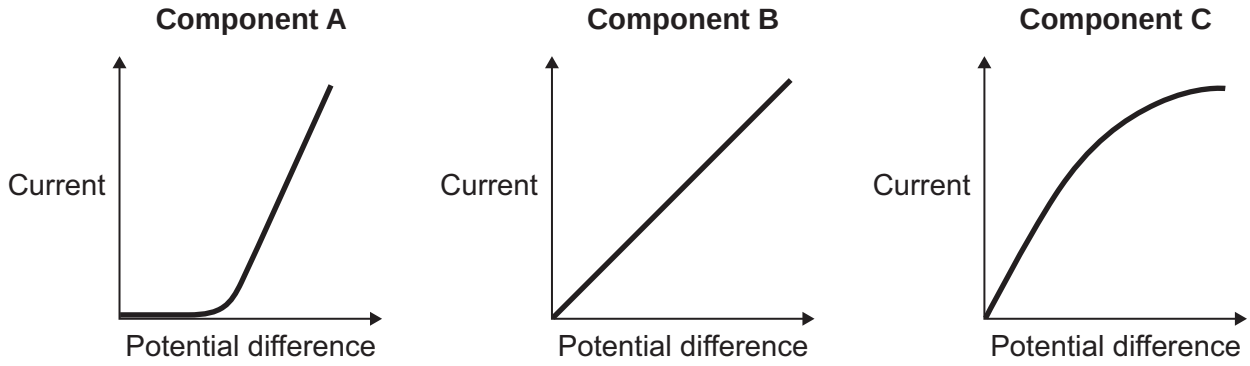

3 (b) (i) Which component, **A**, **B** or **C** is a lamp?

[1 mark]

3 (b) (ii) Which component, **A**, **B** or **C** is a diode?

[1 mark]

5

4.2.2 Series and parallel circuits

Question 08

June 2018 | 8463/1F | Original Q3

0 3 . 1 Draw a diagram to show how 1.5 V cells should be connected together to give a potential difference of 4.5 V.

Use the correct circuit symbol for a cell.

[2 marks]

A student built the circuit shown in **Figure 3**.

Figure 3

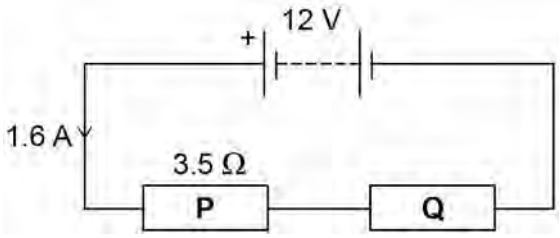

0 3 . 2 Calculate the total resistance of the circuit in **Figure 3**.

Use the equation:

$$\text{resistance} = \frac{\text{potential difference}}{\text{current}}$$

[2 marks]

Total resistance = _____ Ω

Question 08 · continued

0 3 . 3 The resistance of **P** is 3.5 Ω.

Calculate the resistance of **Q**.

[1 mark]

Resistance of **Q** = _____ Ω

0 3 . 4 The student connects the two resistors in **Figure 3** in parallel.

What happens to the total resistance of the circuit?

Tick **one** box.

[1 mark]

- It decreases ☐
- It increases ☐
- It does not change ☐

Give a reason for your answer.

[1 mark]

7

4.2.2 Series and parallel circuits

Question 09

November 2020 | 8463/1F | Original Q4

0 4 A student investigated how the total resistance of identical resistors connected in series varied with the number of resistors.

The student used an ohmmeter to measure the total resistance of the resistors.

Figure 6 shows the student's circuit with 3 resistors.

Figure 6

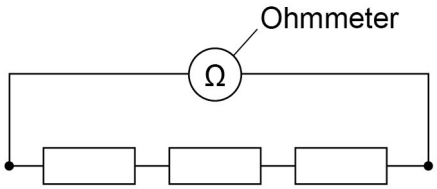

The student repeated each reading of resistance three times.

Table 1 shows the student's results for 3 resistors in series.

Table 1

Number of resistors	Total resistance in Ω			
	Reading 1	Reading 2	Reading 3	Mean
3	35.9	36.0	36.1	36.0

0 4 . 1 Calculate the mean resistance of 1 resistor.

[2 marks]

Resistance = _____ Ω

0 4 . 2 What was the resolution of the ohmmeter the student used?

Tick (✓) **one** box.

[1 mark]

0.1 Ω ☐ 0.2 Ω ☐ 1.1 Ω ☐ 36.0 Ω ☐

0 4 . 3 How do the results show that the student's measurements were precise?

[1 mark]

Tick (✓) **one** box.

The measurements are accurate. ☐

The measurements are grouped closely together. ☐

The measurements are reproducible. ☐

Question 4 continues on the next page

Figure 7 shows the results.

Figure 7

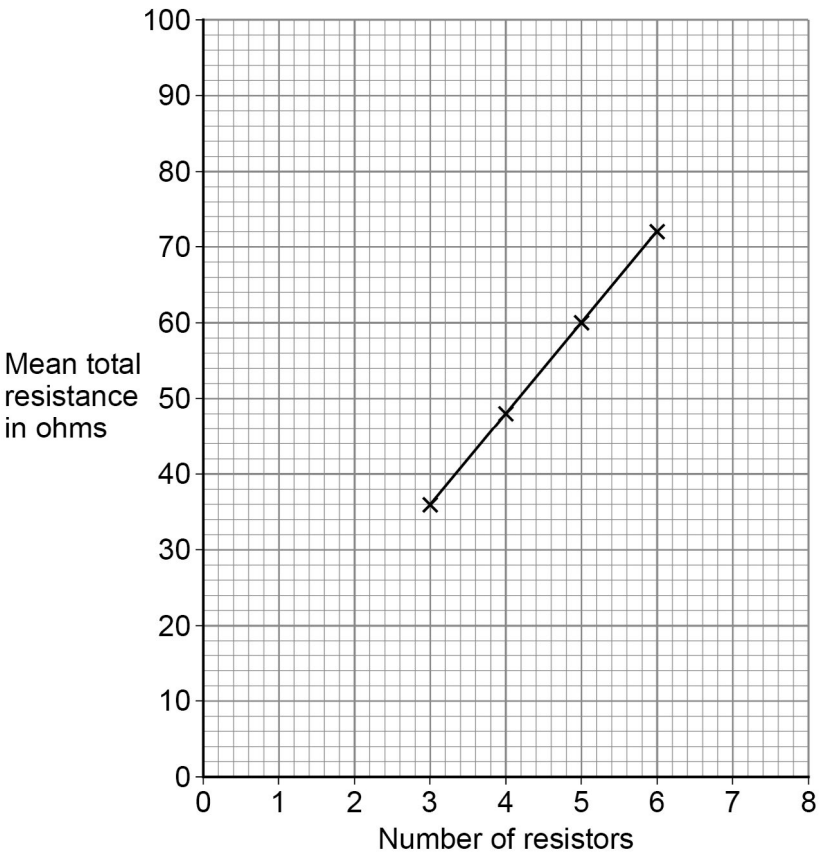

0 4 . 4 How do the results show that the total resistance is directly proportional to the number of resistors?

[1 mark]

Tick (✓) **one** box.

The results give a line with a positive gradient. ☐

The results give a straight line that would go through the origin. ☐

The results show a linear relationship. ☐

4.2.2 Series and parallel circuits

Question 09 · continued

0 4 . 5 Predict the mean total resistance of 7 resistors.

Use **Figure 7**.

[1 mark]

Mean total resistance of 7 resistors = _____ Ω

0 4 . 6 Some resistors are connected in series with a battery.

When more resistors are added in series, the total resistance increases.

Complete the sentences.

Choose answers from the box.

Each answer may be used once, more than once or not at all.

[2 marks]

decreases	**increases**	**remains the same**

When the number of resistors increases, the potential difference across each resistor _____ .

When the number of resistors increases, the current in the circuit _____ .

8

4.2.2 Series and parallel circuits

Question 10

November 2021 | 8463/1F | Original Q4

0 4 A student investigated how the current in a circuit varied with the number of lamps connected in parallel in the circuit.

Figure 4 shows the circuit with three identical lamps connected in parallel.

Figure 4

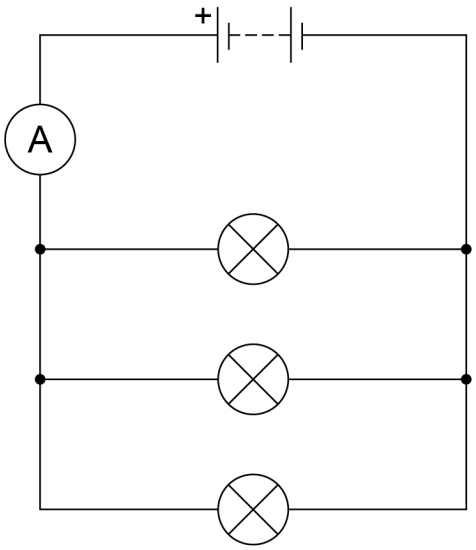

Figure 5 shows the results.

Figure 5

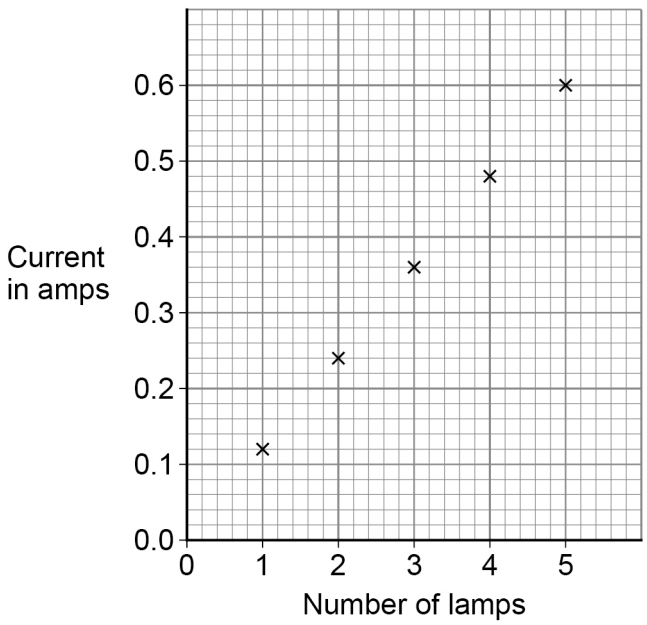

0 4 . 1 Complete the sentences.

Choose answers from the box.

Each answer can be used once, more than once or not at all.

decreased	**stayed the same**	**increased**

[3 marks]

As the number of lamps increased, the current _____.

As the number of lamps increased, the total resistance of the circuit _____.

As the number of lamps increased, the potential difference across the battery _____.

0 4 . 2 When there were three lamps in the circuit the ammeter reading kept changing between 0.35 A and 0.36 A.

What type of error would this lead to?

[1 mark]

Tick (✓) **one** box.

Random error ☐

Systematic error ☐

Zero error ☐

Question 4 continues on the next page

Figure 6 shows a circuit with five ammeters and three identical lamps.

Figure 6

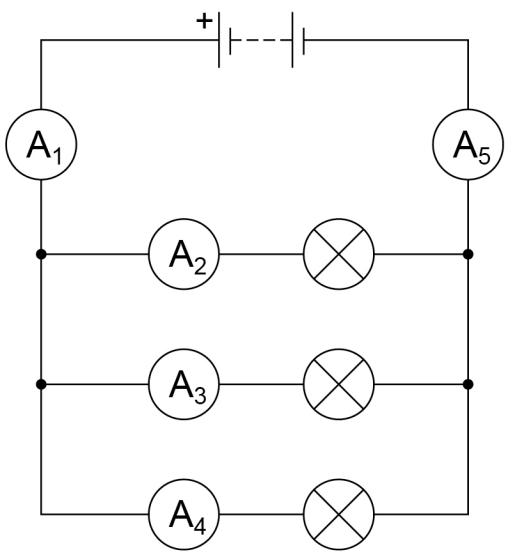

0 4 . 3 Complete **Table 2** to show the readings on ammeters A_2 and A_5.

[2 marks]

Table 2

Ammeter	**A_1**	**A_2**	**A_3**	**A_4**	**A_5**
Current in amps	0.36		0.12	0.12	

Question 10 · continued

0 4 . 4 The resistance of one lamp is 15 Ω.

The current in the lamp is 0.12 A.

Calculate the power output of the lamp.

Use the equation:

$$\text{power} = (\text{current})^2 \times \text{resistance}$$

[2 marks]

Power = _____ W

8

Turn over for the next question