AQA GCSE Physics | 8463

SPECIFICATION POINT 4.2.1.3

Current, resistance and potential difference

Past-paper questions

Tier	**Foundation**
Question groups	**74**
Available paper years	**2003–2025**

Using this booklet

1. Answer the questions in order and show your working.
2. Original question numbers and marks are retained.
3. Print at actual size (100%) for measuring questions.
4. Use the companion answer booklet to check your work.

Name: _____ **Date:** _____

Whole questions are retained for context, so some parts assess other specification points. Current and legacy sources are labelled. Continue on extra paper if needed.

4.2.1.3 Current, resistance and potential difference

Question 01

June 2003 | 3451F | Original Q1 | Legacy

1 The drawing shows three identical cells and two identical lamps joined in a circuit.

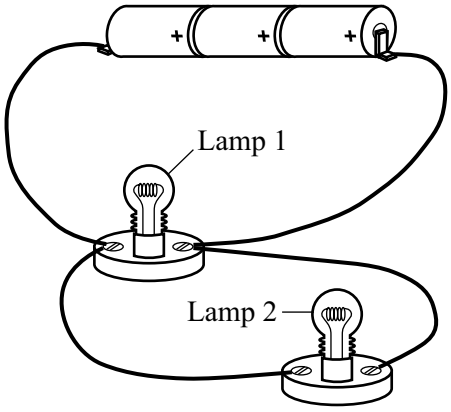

(a) Use the correct symbols to draw a circuit diagram for this circuit.

(3 marks)

(b) Each of the cells provides a potential difference (voltage) of 1.5 volts. What is the total potential difference (voltage) provided by all three cells?

.....volts

(1 mark)

(c) Complete this sentence by crossing out the **two** lines in the box that are wrong.

The current through lamp 2 will be

smaller than
the same as
bigger than

the current through lamp 1.

(1 mark)

4.2.1.3 Current, resistance and potential difference

Question 02

June 2003 | 3451F | Original Q16 | Legacy

16 (a) In one design of tilt switch, two metal contacts are sealed inside a small plastic container. There is some mercury inside the container. Mercury is a metal which is a liquid at room temperature.

The switch is shown in an OFF position. Next to it, draw the same switch in an ON position.

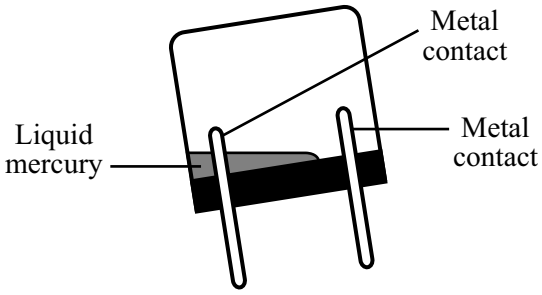

OFF **ON** *(2 marks)*

(b) The diagram shows the circuit used in an experiment. Both switches are shown in the open (off) position.

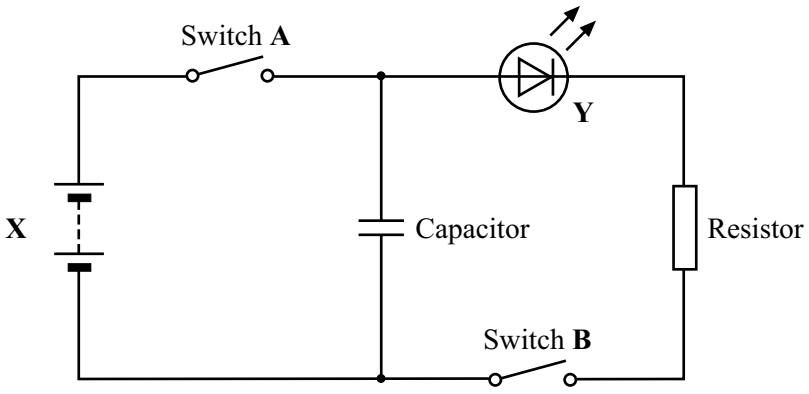

(i) Name component **X** and component **Y**.

X is a ..... **Y** is a.....

(2 marks)

(ii) Switch **A** was closed for three minutes. Switch **A** was then opened. Switch **B** was then closed and the time, t, was measured for how long component **Y** stayed on.

The experiment was then repeated, using a resistor of greater resistance.

How would this change affect the time, t?

.....

(1 mark)

(iii) Explain the reason for your answer to part (b) (ii).

.....

.....

.....

.....

(2 marks)

(c) The diagram shows the coloured bands on a resistor.

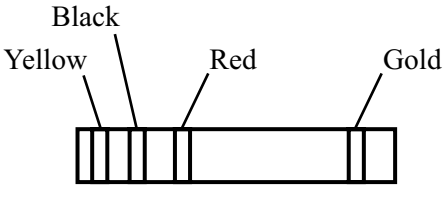

The gold band tells you that the tolerance is ± 5%.

The colour code for resistors is given in the table.

Figure	Colour
0	black
1	brown
2	red
3	orange
4	yellow
5	green
6	blue
7	violet
8	grey
9	white

What is the **maximum** value of the resistance of the resistor shown in the diagram?

Show clearly how you work out your final answer and give the unit.

.....

.....

.....

Maximum resistance = ...

(3 marks)

10

4.2.1.3 Current, resistance and potential difference

Question 03

June 2003 | 3462F3 | Original Q1 | Legacy

1 The drawing shows three identical cells and two identical lamps joined in a circuit.

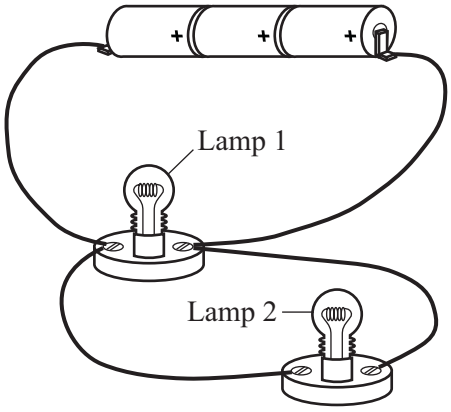

(a) Use the correct symbols to draw a circuit diagram for this circuit.

(3 marks)

(b) Each of the cells provides a potential difference (voltage) of 1.5 volts. What is the total potential difference (voltage) provided by all three cells?

.....volts

(1 mark)

(c) Complete this sentence by crossing out the **two** lines in the box that are wrong.

The current through lamp 2 will be

smaller than
the same as
bigger than

the current through lamp 1.

(1 mark)

4.2.1.3 Current, resistance and potential difference

Question 04

June 2004 | 3451F | Original Q10 | Legacy

10 The drawing shows the circuit used to investigate how the current through a 5 ohm (Ω) resistor changes as the potential difference (voltage) across the resistor changes.

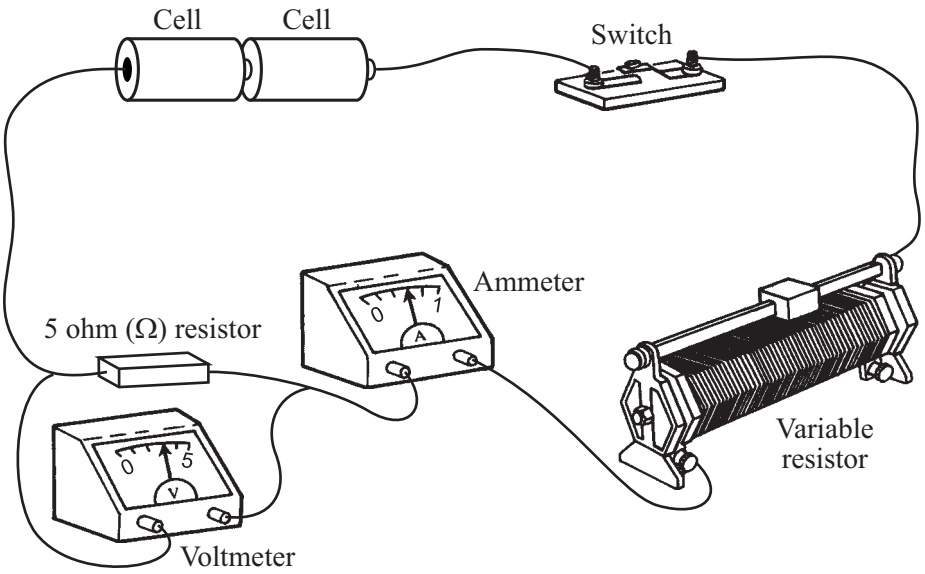

(a) Draw, in the space below, a circuit diagram of this circuit. Use the correct symbols for each part of the circuit.

(2 marks)

4.2.1.3 Current, resistance and potential difference

Question 04 · continued

1 /

MARGIN BLANK

(b) (i) Write down the equation that links current, potential difference and resistance.

.....

(1 mark)

(ii) Calculate the potential difference across the 5 ohm (Ω) resistor when the current through the resistor equals 0.4 A. Show clearly how you work out your final answer.

.....

.....

potential difference =.....volts

(2 marks)

(iii) Complete the graph to show how the current through the resistor changes as the potential difference across the resistor increases from 0 V to 3 V. Assume the resistor stays at a constant temperature.

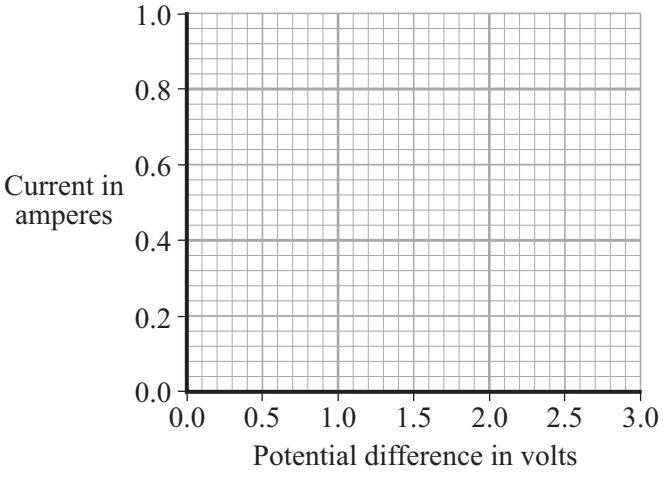

(2 marks)

(c) The resistor is replaced by a 3 V filament lamp. The resistance of the lamp increases as the potential difference across it increases. Why?

.....

.....

(1 mark)

8

4.2.1.3 Current, resistance and potential difference

Question 05

June 2004 | 3451F | Original Q14 | Legacy

14 (a) A physics textbook says that:

"The *flow of electrons* through a circuit can be controlled by using a fixed resistor or a variable resistor."

(i) What word can be used for the *flow of electrons*?

.....

(1 mark)

(ii) The flow of electrons can also be controlled by a *thermistor*.

How is a *thermistor* affected by an increase in temperature?

.....

.....

.....

(2 marks)

(b) Draw straight lines to link each part of an electronic circuit with its description.

Part of electronic circuit	Description
input sensor	controlled by the processor
processor	detects changes in the environment
output device	decides what action is needed

(2 marks)

4.2.1.3 Current, resistance and potential difference

Question 05 · continued

MARGIN
BLANK

(c) The diagram shows part of an electronic circuit. This part is connected to the processor.

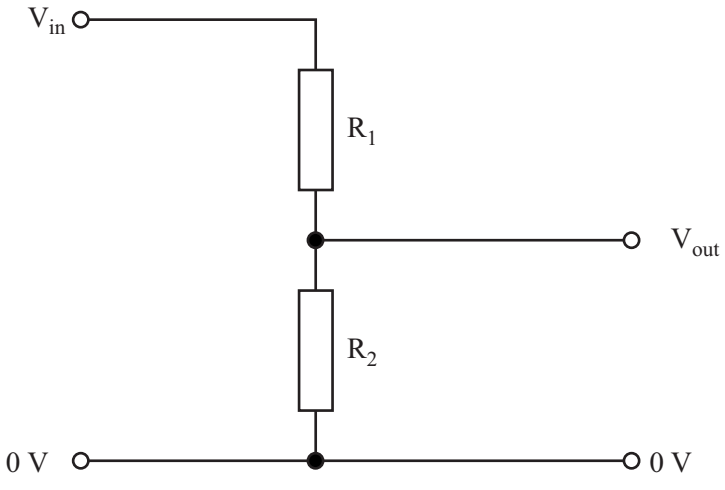

(i) What is the name of this part?

.....

(1 mark)

(ii) The input potential difference (voltage) is 6 volts, the value of R_1 is 15 ohms and the value of R_2 is 30 ohms.

Use the following equation to calculate the value of the output potential difference.

$$V_{out} = V_{in} \times \frac{R_2}{(R_1 + R_2)}$$

.....

.....

Output potential difference = ...volts

(2 marks)

(iii) The resistor R_1 is replaced by another resistor with a higher value. The resistor R_2 is not changed.

What effect will this have on:

the potential difference across the new resistor;

.....

the potential difference across R_2?

.....

(2 marks)

4.2.1.3 Current, resistance and potential difference

Question 06

June 2004 | 3462F3 | Original Q8 | Legacy

8 The drawing shows the circuit used to investigate how the current through a 5 ohm (Ω) resistor changes as the potential difference (voltage) across the resistor changes.

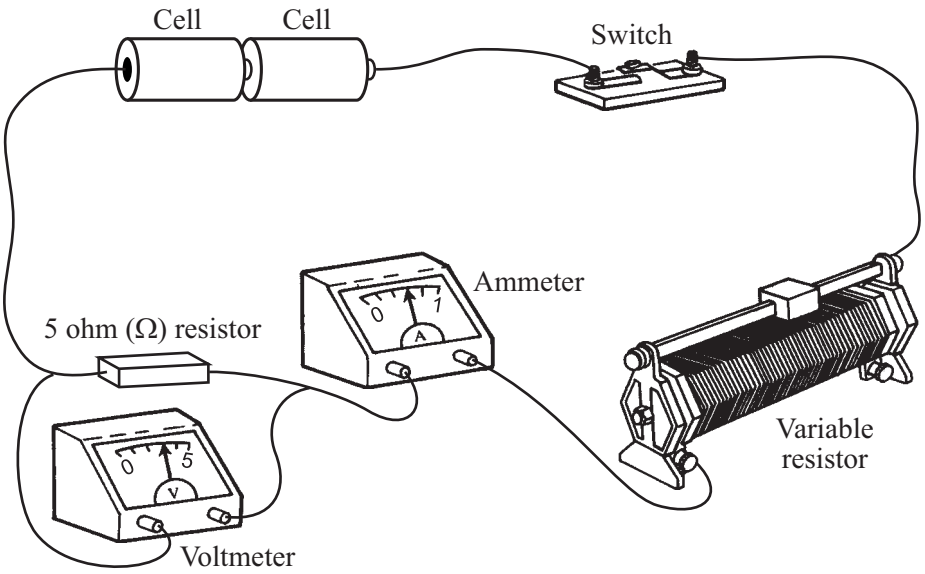

(a) Draw, in the space below, a circuit diagram of this circuit. Use the correct symbols for each part of the circuit.

(2 marks)

4.2.1.3 Current, resistance and potential difference

Question 06 · continued

MARGIN BLANK

(b) (i) Write down the equation that links current, potential difference and resistance.

.....

(1 mark)

(ii) Calculate the potential difference across the 5 ohm (Ω) resistor when the current through the resistor equals 0.4 A. Show clearly how you work out your final answer.

.....

.....

potential difference =.....volts

(2 marks)

(iii) Complete the graph to show how the current through the resistor changes as the potential difference across the resistor increases from 0 V to 3 V. Assume the resistor stays at a constant temperature.

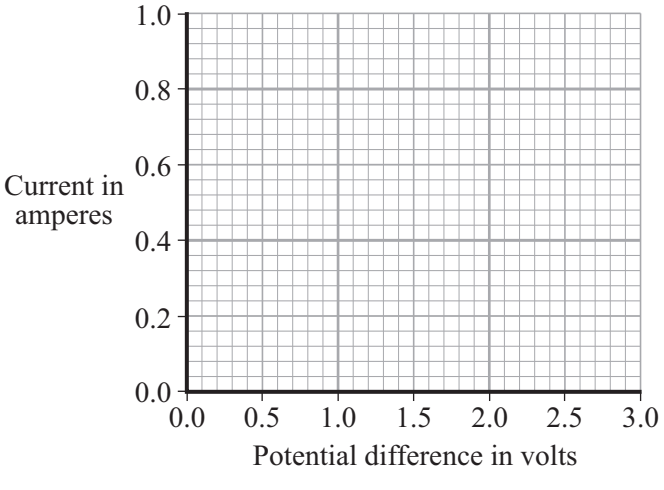

(2 marks)

(c) The resistor is replaced by a 3 V filament lamp. The resistance of the lamp increases as the potential difference across it increases. Why?

.....

.....

(1 mark)

8

4.2.1.3 Current, resistance and potential difference

Question 07

June 2005 | 3451 | Original Q11 | Legacy

11 The circuit shown has four identical ammeters.

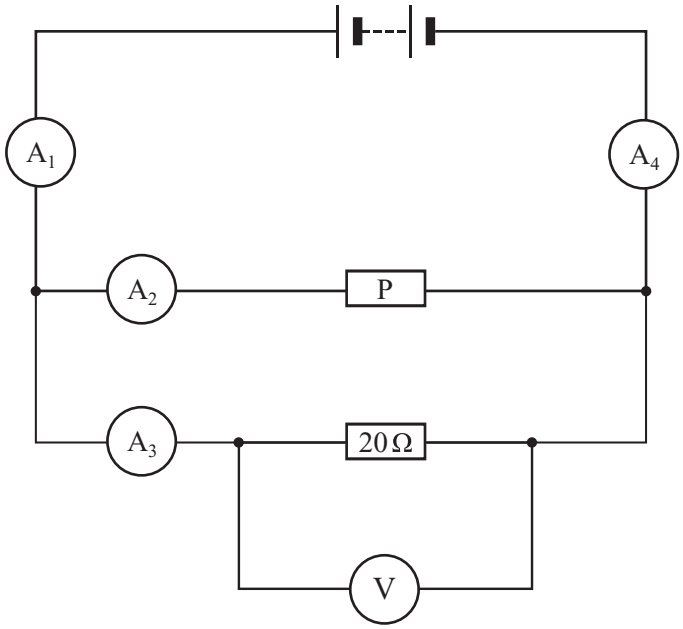

(a) The table gives the current through two of the ammeters.

(i) Complete the table to show the current through the other two ammeters.

Ammeter	Reading on ammeter in amps
A_1	
A_2	0.2
A_3	0.3
A_4	

(2 marks)

(ii) Which **one** of the following statements is correct. Tick (✓) the box next to your choice.

The resistance of **P** is more than 20 Ω. ☐

The resistance of **P** is equal to 20 Ω. ☐

The resistance of **P** is less than 20 Ω. ☐

Give a reason for your choice.

.....

.....

4.2.1.3 Current, resistance and potential difference

Question 07 · continued

MARGIN BLANK

(b) (i) Write down the equation that links current, potential difference and resistance.

.....

(1 mark)

(ii) Calculate the reading on the voltmeter. Show clearly how you work out your answer.

.....

.....

Voltmeter reading = ... volts.

(2 marks)

(iii) State the potential difference of the power supply.

.....

(1 mark)

(c) A second circuit contains an unknown component labelled **X**.

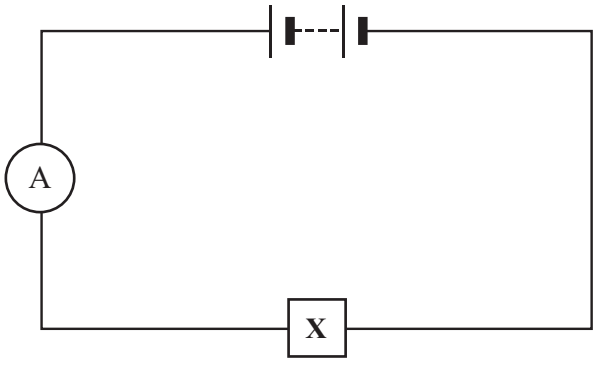

As component **X** is heated, the reading on the ammeter goes up.

What is component **X**?

.....

Give a reason for your answer.

.....

.....

(2 marks)

10

4.2.1.3 Current, resistance and potential difference

Question 08

June 2005 | 3462 | Original Q9 | Legacy

9 The circuit shown has four identical ammeters.

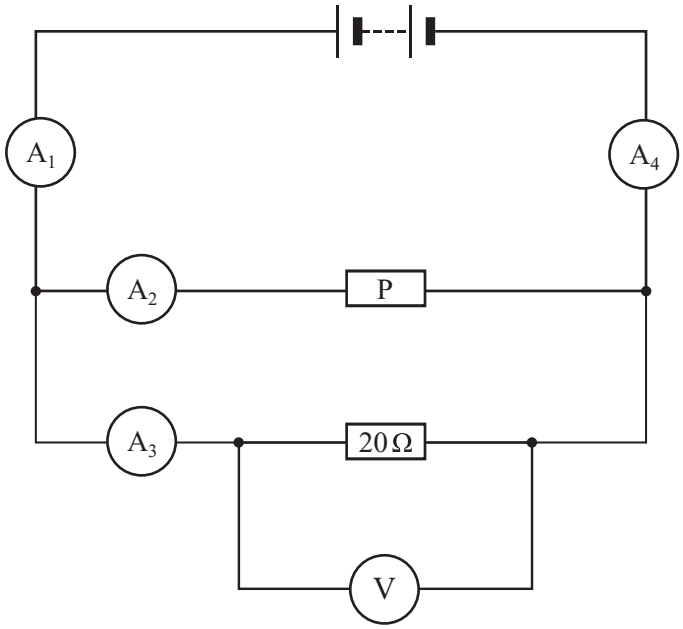

(a) The table gives the current through two of the ammeters.

(i) Complete the table to show the current through the other two ammeters.

Ammeter	Reading on ammeter in amps
A_1	
A_2	0.2
A_3	0.3
A_4	

(2 marks)

(ii) Which **one** of the following statements is correct. Tick (✓) the box next to your choice.

The resistance of **P** is more than 20 Ω. ☐

The resistance of **P** is equal to 20 Ω. ☐

The resistance of **P** is less than 20 Ω. ☐

Give a reason for your choice.

.....

.....

4.2.1.3 Current, resistance and potential difference

Question 08 · continued

1 /

MARGIN BLANK

(b) (i) Write down the equation that links current, potential difference and resistance.

.....

(1 mark)

(ii) Calculate the reading on the voltmeter. Show clearly how you work out your answer.

.....

.....

Voltmeter reading = ... volts.

(2 marks)

(iii) State the potential difference of the power supply.

.....

(1 mark)

(c) A second circuit contains an unknown component labelled **X**.

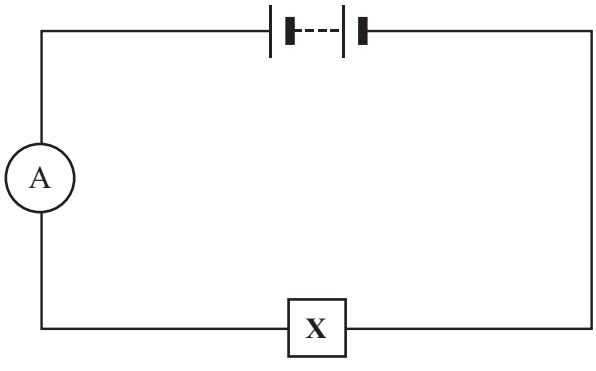

As component **X** is heated, the reading on the ammeter goes up.

What is component **X**?

.....

Give a reason for your answer.

.....

.....

(2 marks)

10

4.2.1.3 Current, resistance and potential difference

Question 09

June 2006 | 3451 | Original Q10 | Legacy

10 (a) The diagram shows an electronic system.



Use a word from the box to fill in each space. Each word should be used only once.

buzzers	LDRs	LEDs	motors	switches	thermistors

Input sensors include:

- ..... which respond to changes in temperature;
- ..... which respond to changes in light;
- ..... which respond to changes in pressure.

Processors can be made using logic gates.

Output devices include:

- ..... which produce light;
- ..... which produce sound;
- ..... which produce movement.

(6 marks)

Question 09 · continued

BLANK

(b) Complete the truth tables by writing **1** or **0** in each space in the output column.

(i) AND gate

1st input	2nd input	Output
0	0	.....
1	0	.....
0	1	.....
1	1	1

(1 mark)

(ii) NOT gate

Input	Output
0	.....
1	.....

(1 mark)

(iii) OR gate

1st input	2nd input	Output
0	0	0
1	0	.....
0	1	.....
1	0	.....

(1 mark)

(c) Capacitors can be used as simple timers in electronic circuits.

(i) Draw a circuit symbol for a capacitor.

(1 mark)

(ii) Complete the sentence.

When a current flows to an uncharged capacitor, ... is stored and the potential difference across the capacitor ..... .

(2 marks)

12

4.2.1.3 Current, resistance and potential difference

Question 10

June 2006 | 3451 | Original Q12 | Legacy

12 The diagram shows how a student joined several components, including a 6-volt lamp and four identical 1.5 volt cells, in a circuit.

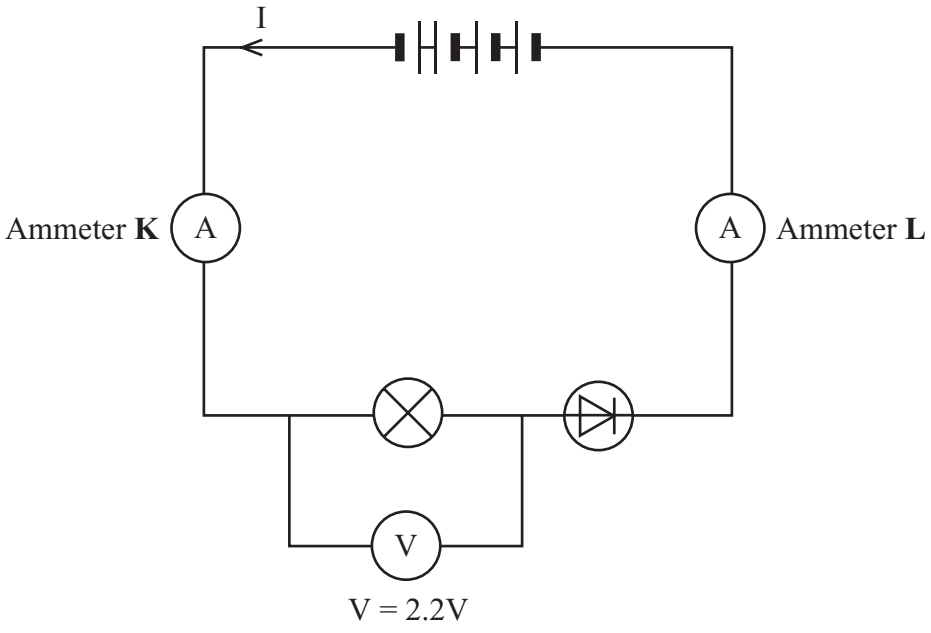

(a) The reading on ammeter **K** is 0.05 A.

What is the reading on ammeter **L**?

.....

(1 mark)

(b) The student expected the lamp in the diagram to be much brighter and the reading on the voltmeter to be 6 volts.

(i) Give **two** reasons why the reading on the voltmeter is much less than 6 volts. The voltmeter is working correctly.

1.....

.....

2.....

.....

(2 marks)

Question 10 · continued

BLANK

(ii) The student decides that the lamp is dim because the diode is connected the wrong way round. When the student reverses the connections to the diode the lamp goes out.

Explain why.

.....

.....

.....

.....

(2 marks)

(c) The graph shows how the current through a filament lamp changes as the voltage (potential difference) across it changes.

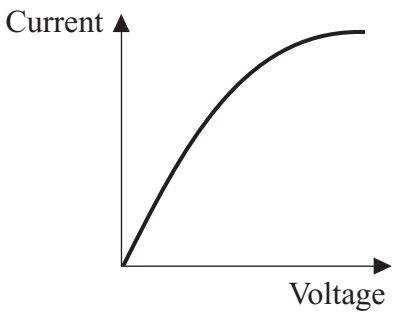

Explain why the graph is not a straight line.

To gain full marks in this question you should write your ideas in good English. Put them into a sensible order and use the correct scientific words.

.....

.....

.....

.....

.....

.....

.....

(4 marks)

9

4.2.1.3 Current, resistance and potential difference

Question 11

June 2006 | 3462 | Original Q10 | Legacy

10 The diagram shows how a student joined several components, including a 6-volt lamp and four identical 1.5 volt cells, in a circuit.

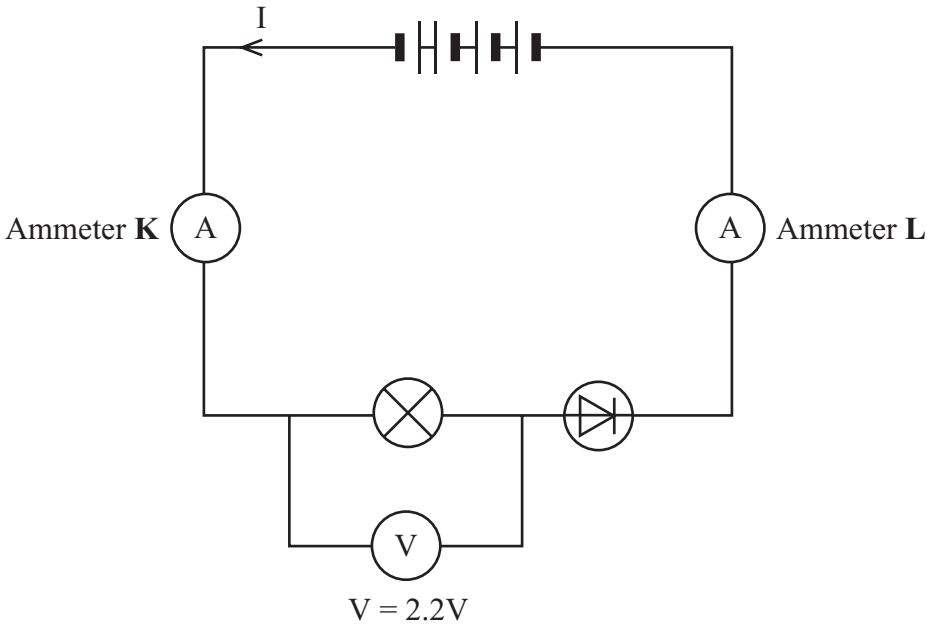

(a) The reading on ammeter **K** is 0.05 A.

What is the reading on ammeter **L**?

.....

(1 mark)

(b) The student expected the lamp in the diagram to be much brighter and the reading on the voltmeter to be 6 volts.

(i) Give **two** reasons why the reading on the voltmeter is much less than 6 volts. The voltmeter is working correctly.

1.....

.....

2.....

.....

(2 marks)

Question 11 · continued

BLANK

(ii) The student decides that the lamp is dim because the diode is connected the wrong way round. When the student reverses the connections to the diode the lamp goes out.

Explain why.

.....

.....

.....

.....

(2 marks)

(c) The graph shows how the current through a filament lamp changes as the voltage (potential difference) across it changes.

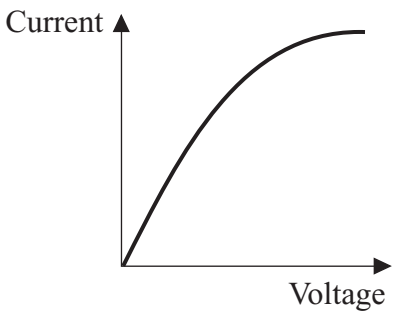

Explain why the graph is not a straight line.

To gain full marks in this question you should write your ideas in good English. Put them into a sensible order and use the correct scientific words.

.....

.....

.....

.....

.....

.....

.....

(4 marks)

9

4.2.1.3 Current, resistance and potential difference

Question 12

4 (a) Look at this electrical safety information poster.

Get it right!
Choose the right fuse.

Most fuses are 3 A or 13 A.

To choose the right fuse you must know the power of the appliance.

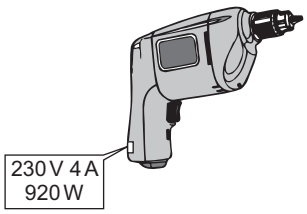

Power is marked on the information plate.

Power over 700 W use a 13 A fuse.	Power under 700 W use a 3 A fuse.
• Fan heaters • Kettles • Dishwashers • Washing machines	• Radios • Table lamps • Portable TVs • Electric blankets

(i) Complete the table to show which size fuse, 3 A or 13 A, should be fitted to each of the appliances.

Appliance	Power rating	Fuse
Hairdryer	1600 W	
Electric saw	350 W	
Food mixer	1200 W	

(2 marks)

(ii) The plug of an electric kettle has been wrongly fitted with a 3 A fuse.

What will happen to the fuse when the kettle is switched on?

.....

.....

(1 mark)

Question 12 · continued

BLANK

(b) The drawing shows a toaster, which takes a current of 4 A from the 230 V mains electricity supply.

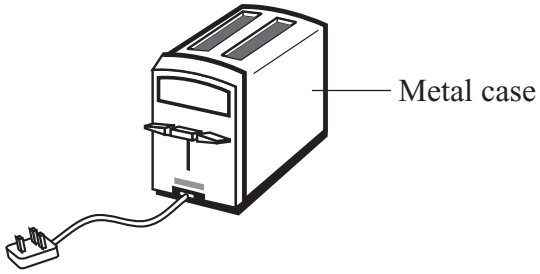

(i) Use the equation in the box to calculate the power of the toaster.

Power (watt, W)	=	current (ampere, A)	×	potential difference (volt, V)

Show clearly how you work out your answer.

.....

.....

Power = ... W

(2 marks)

(ii) A householder rewires the toaster with a new cable and plug. The diagram shows how the new cable has been connected to the plug.

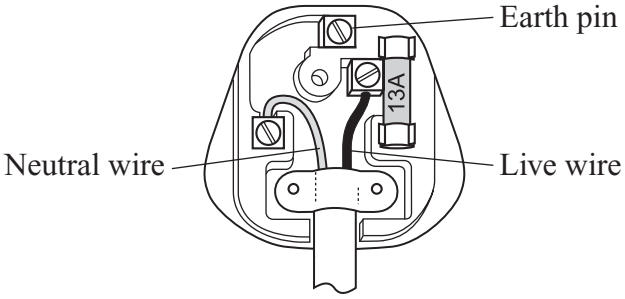

Explain why the toaster may **not** be safe to use.

.....

.....

.....

.....

(2 marks)

Question 4 continues on the next page

4.2.1.3 Current, resistance and potential difference

Question 12 · continued

BLANK

(c) The diagram shows the oscilloscope traces produced by four different electricity supplies. The settings on the oscilloscope are the same for each electricity supply.

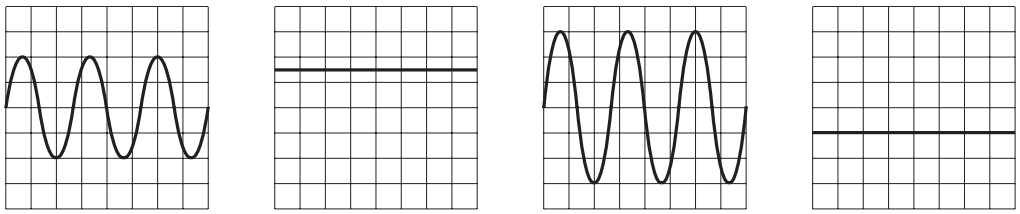

K **L** **M** **N**

(i) Which **two** supplies give a direct current (d.c)?

..... and .....

(1 mark)

(ii) Supply **K** provides a peak potential difference of 6 V.

What is the peak potential difference provided by supply **M**?

.....

(1 mark)

9

4.2.1.3 Current, resistance and potential difference

Question 13

January 2008 | PHY2F | Original Q6 | Legacy

6 (a) The diagram shows the circuit used to investigate the resistance of a material.
The diagram is incomplete; the ammeter and voltmeter are missing.

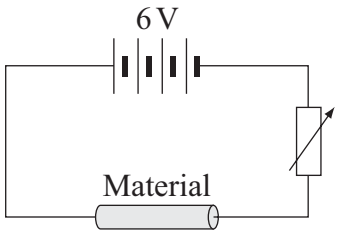

(i) Draw the symbols for the ammeter and voltmeter on the diagram in the correct places. *(2 marks)*

(ii) How can the current through the material be changed?

.....

.....

(1 mark)

(b) The material, called conducting putty, is rolled into cylinders of different lengths but with equal thicknesses.

Graph 1 shows how the resistance changes with length.

Graph 1

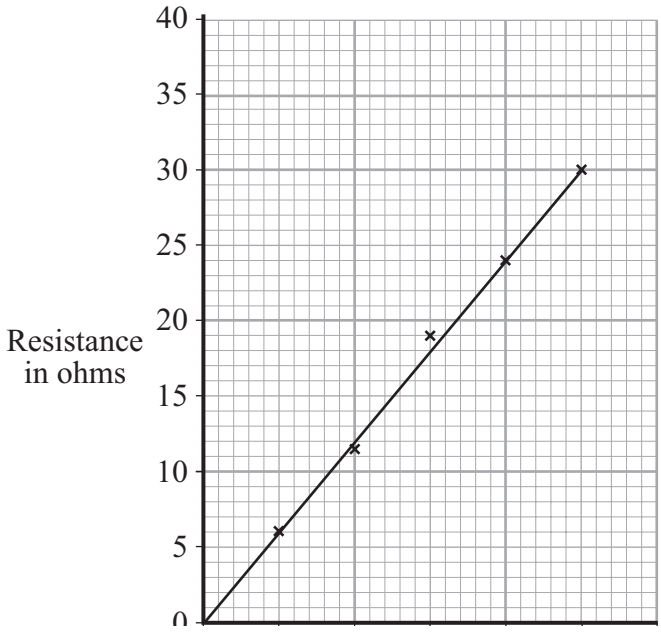

4.2.1.3 Current, resistance and potential difference

Question 13 · continued

BLANK

(i) Why has the data been shown as a line graph rather than a bar chart?

.....

.....

(1 mark)

(ii) The current through a 30 cm length of conducting putty was 0.15 A.

Use **Graph 1** to find the resistance of a 30 cm length of conducting putty.

Resistance = ... ohms

(1 mark)

(iii) Use your answer to (b)(ii) and the equation in the box to calculate the potential difference across a 30 cm length of conducting putty.

potential difference = current × resistance

Show clearly how you work out your answer.

.....

.....

.....

Potential difference = ... volts

(2 marks)

Question 6 continues on the next page

Question 13 · continued

BLANK

(c) A second set of data was obtained using thicker pieces of conducting putty. Both sets of results are shown in **Graph 2**.

Graph 2

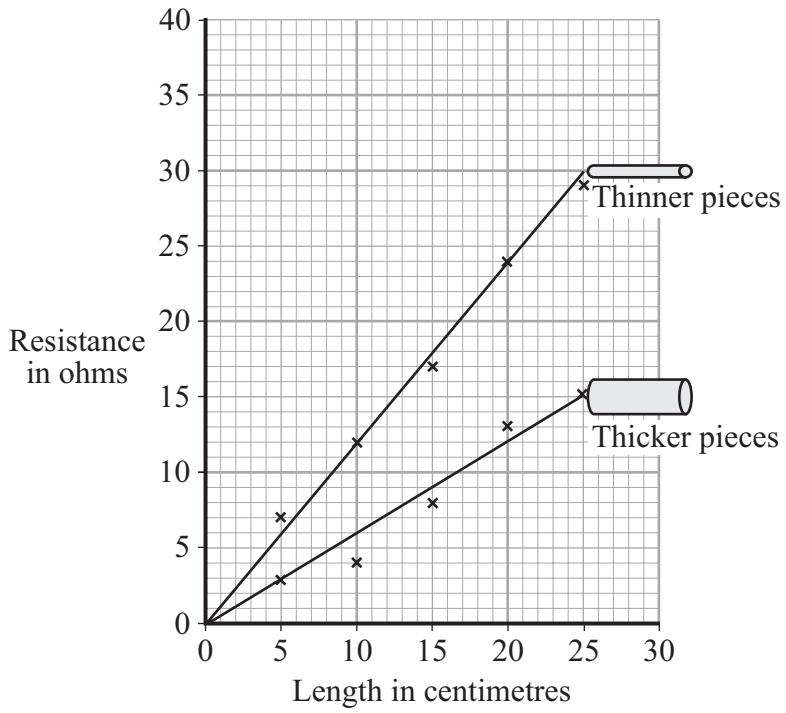

(i) What is the relationship between the resistance and the thickness of the conducting putty?

.....

.....

(1 mark)

(ii) Name **one** error that may have reduced the accuracy of the results.

.....

(1 mark)

(iii) How could the reliability of the data have been improved?

.....

.....

(1 mark)

10

4.2.1.3 Current, resistance and potential difference

Question 14

March 2008 | PHY1BP | Original Q8 | Legacy

QUESTION EIGHT

A student investigated the absorption of infra red radiation by a block of gelatine.

She placed a block of gelatine on a piece of graph paper and cut the block to a length of 24 cm. She then placed an infra red source touching one end of the block and an infra red detector touching the other end as shown in the diagram.

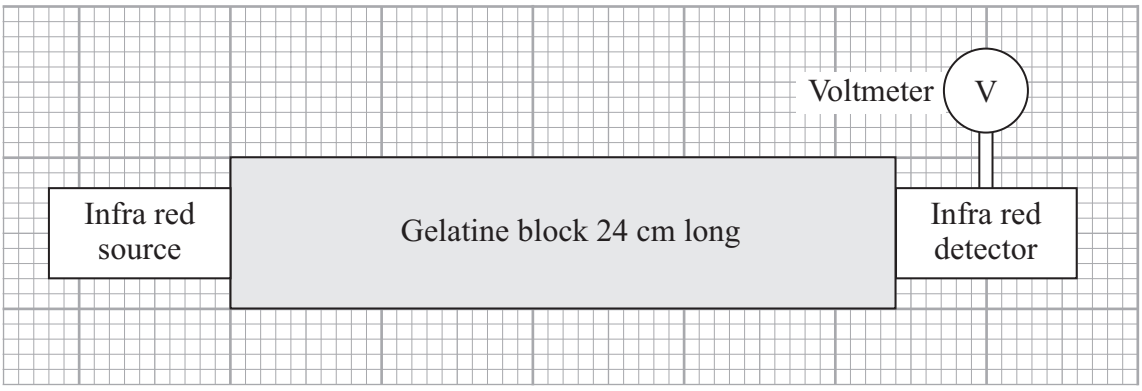

She recorded the output potential difference (p.d.) from the infra red detector.

She then repeated the experiment several times. Each time, she cut 2 cm off the gelatine block and set up the apparatus as shown in the diagram.

The graph shows her results.

The higher the intensity of infra red radiation received by the detector, the greater the output p.d.

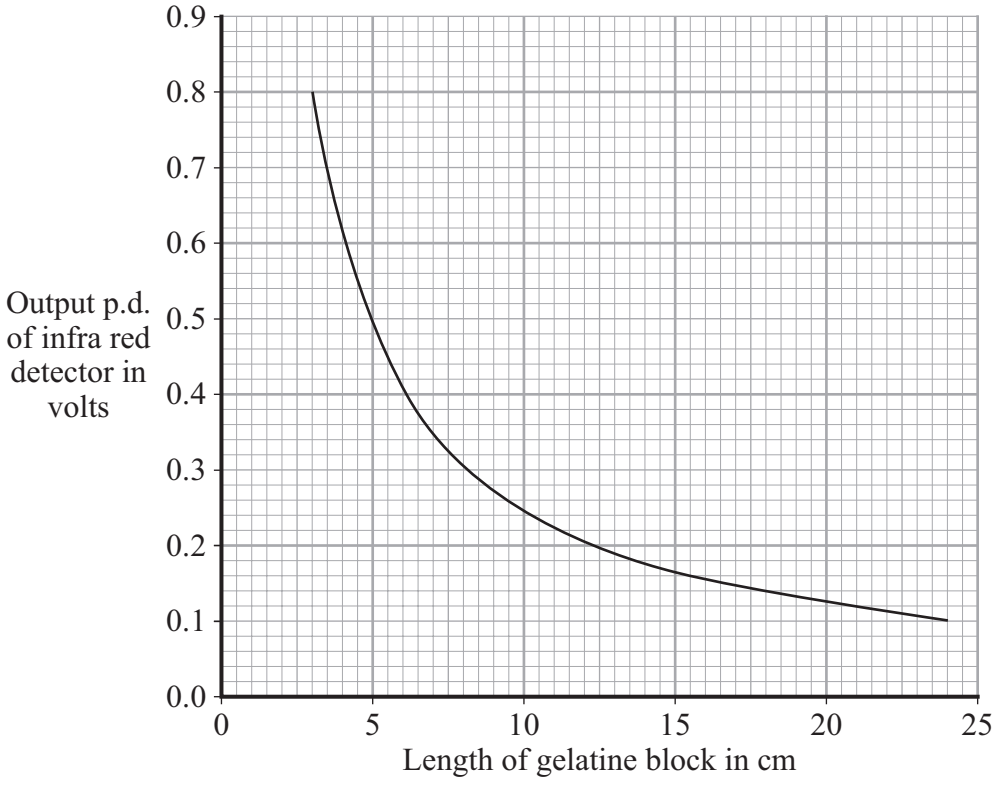

Question 14 · continued

8A What was the dependent variable in this experiment?

1 the position of the infra red source

2 the length of the gelatine block

3 the position of the infra red detector

4 the output p.d. from the infra red detector

8B Which is the best description of the pattern shown by the graph?

1 As the length of the gelatine block increases, the intensity of infra red radiation received by the detector decreases.

2 As the length of the gelatine block increases, the intensity of infra red radiation received by the detector decreases by a similar amount.

3 The longer the gelatine block, the larger the effect of cutting off 2 cm on the increase in the intensity of infra red radiation received by the detector.

4 There is no relationship between the length of the gelatine block and the intensity of infra red radiation received by the detector.

8C The table shows the student's results.

Length of gelatine block in cm	Output p.d. in V
24.0	0.1
12.0	0.2
6.0	0.4
3.0	0.8

Based on the data that the student recorded, what was the sensitivity of the voltmeter?

1 0.1 V

2 0.2 V

3 0.4 V

4 1.0 V

Question 8 continues on the next page

4.2.1.3 Current, resistance and potential difference

Question 14 · continued

8D Scientists carried out a similar investigation using glass optical fibres in place of the gelatine block. They found that there was no significant reduction in the output p.d. of the infra red detector until the fibre was several kilometres long.

This shows that . . .

1 gelatine absorbs infra red radiation much more strongly than glass.

2 glass is more transparent than water.

3 infra red radiation passes through solids faster than through liquids.

4 infra red radiation can pass through bent optical fibres.

4.2.1.3 Current, resistance and potential difference

Question 15

June 2008 | PHY2F | Original Q5 | Legacy

5 (a) The circuit diagram drawn below includes a component labelled **X**.

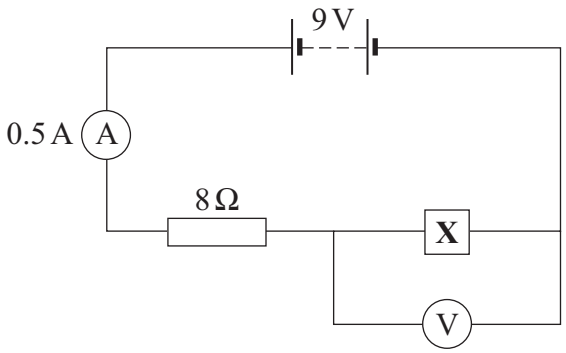

5 (a) (i) Use the equation in the box to calculate the potential difference across the 8 ohm resistor.

potential difference = current × resistance

Show clearly how you work out your answer.

.....

.....

Potential difference = ... volts

(2 marks)

5 (a) (ii) What is the potential difference across component **X**?

.....

(1 mark)

4.2.1.3 Current, resistance and potential difference

Question 15 · continued

for mark

5 (b) The graph shows how the resistance of component **X** changes with temperature.

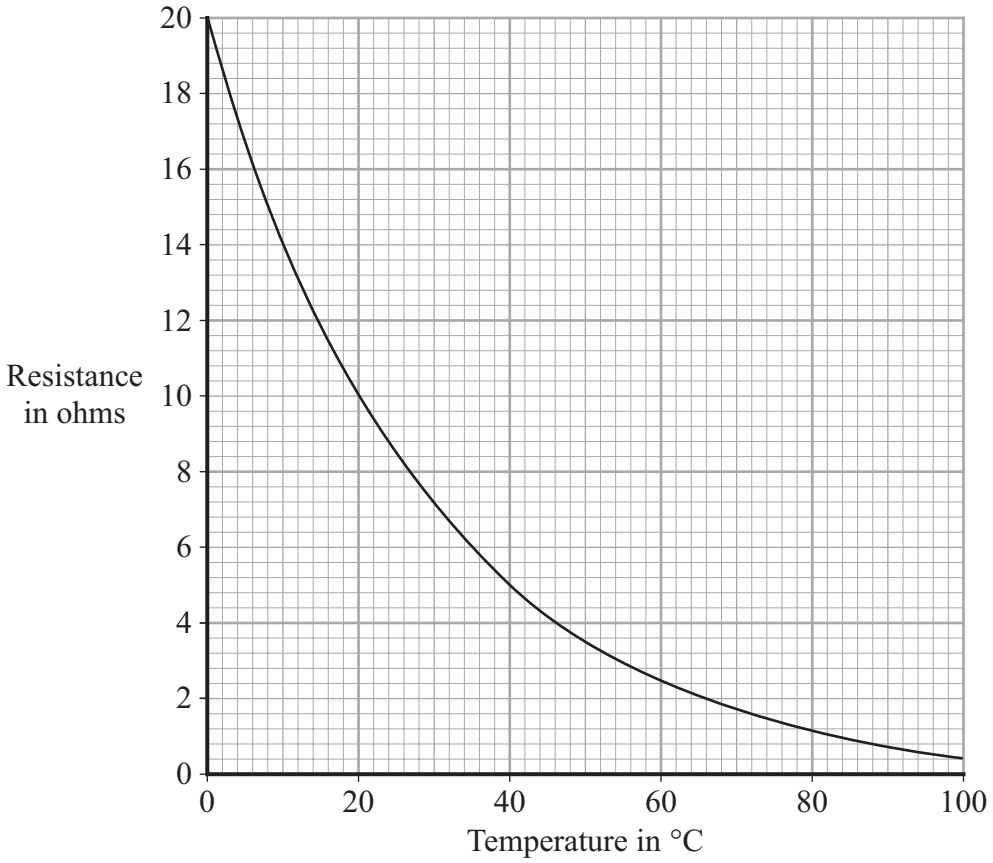

5 (b) (i) What is component **X**?

.....

(1 mark)

5 (b) (ii) Over which range of temperatures does the resistance of component **X** change the most?

Put a tick (✓) in the box next to your choice.

0 °C to 20 °C ☐

20 °C to 40 °C ☐

40 °C to 60 °C ☐

60 °C to 80 °C ☐

80 °C to 100 °C ☐

(1 mark)

5

4.2.1.3 Current, resistance and potential difference

Question 16

4 (a) The diagram shows the circuit used by a student to measure the power of a filament lamp.

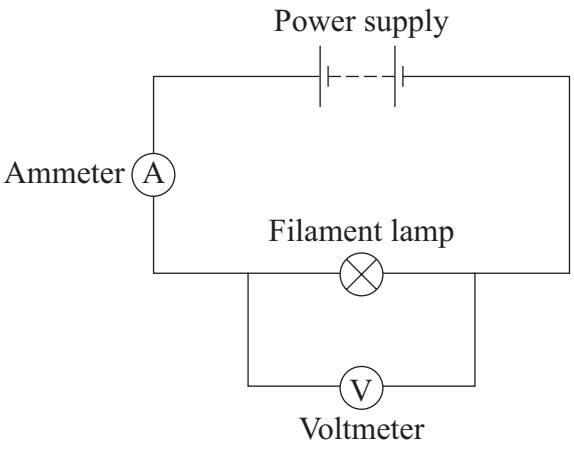

Name a component connected in parallel with the filament lamp.

.....

(1 mark)

4 (b) By adding another component to the circuit, the student is able to obtain a range of ammeter and voltmeter readings.

Ammeter reading in amps	Voltmeter reading in volts
0.10	1.0
0.15	2.0
0.20	4.0
0.25	7.0
0.30	11.0

Question 16 · continued

for mark

4 (b) (i) Which **one** of the following components did the student add to the circuit?

Draw a ring around your answer.

fuse **switch** **variable resistor**

(1 mark)

4 (b) (ii) What is the range of ammeter readings taken by the student?

from ..... amps to ..... amps

(1 mark)

4 (b) (iii) Use the data in the table and the equation in the box to calculate the **maximum** power of the filament lamp.

power (watt, W)	=	current (ampere, A)	×	potential difference (volt, V)

Show clearly how you work out your answer.

.....

.....

Power = ... W

(3 marks)

4 (c) Complete the following sentence by drawing a ring around the correct line in the box.

As the temperature of a filament lamp increases, its resistance

increases
remains constant
decreases

.

(1 mark)

7

4.2.1.3 Current, resistance and potential difference

Question 17

1 (a) Complete the following sentence by using **one** of the words in the box.

Grid	**Power**	**Supply**

The network is called the National ..... .

(1 mark)

1 (b) In the diagram, **A**, **B**, **C** and **D** are transformers.

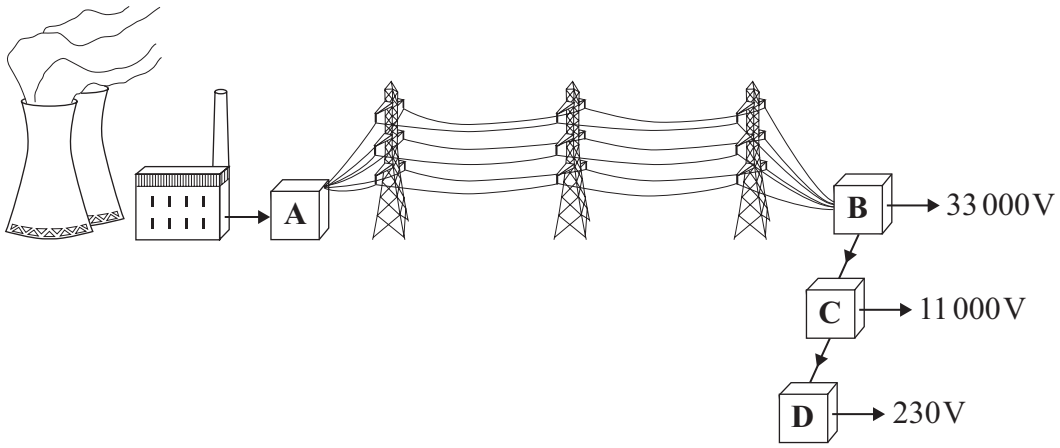

1 (b) (i) Which transformer, **A**, **B**, **C** or **D**, is a step-up transformer?

Transformer .....

(1 mark)

1 (b) (ii) Which transformer, **A**, **B**, **C** or **D**, will supply homes, offices and shops?

Transformer .....

(1 mark)

4.2.1.3 Current, resistance and potential difference

Question 17 · continued

for mark

1 (c) Complete the following sentence by drawing a ring around the correct line in the box.

In a step-down transformer, the potential difference (p.d.) across the primary coil is

less than
the same as
more than

the p.d. across the secondary coil.

(1 mark)

4

Turn over for the next question

4.2.1.3 Current, resistance and potential difference

Question 18

June 2009 | PHY2F | Original Q1 | Legacy

1 (a) The graphs, **A**, **B** and **C**, show how the current through a component varies with the potential difference (p.d.) across the component.

Draw a line to link each graph to the correct component.
Draw only **three** lines.

Component

A

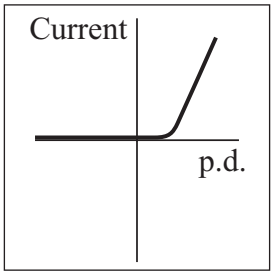

A resistor at constant temperature



B

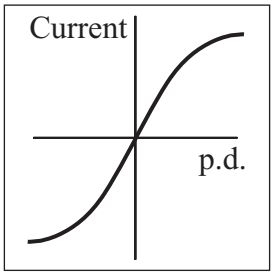

A filament lamp



C

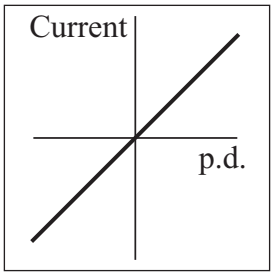

A diode



(2 marks)

4.2.1.3 Current, resistance and potential difference

Question 18 · continued

for mark

1 (b) Each of the circuits, **J**, **K** and **L**, include two diodes.

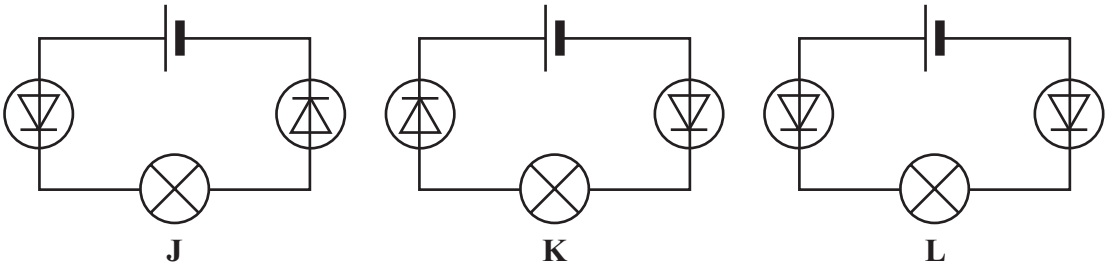

In which **one** of the circuits, **J**, **K** or **L**, would the filament lamp be on?

.....

(1 mark)

3

Turn over for the next question

4.2.1.3 Current, resistance and potential difference

Question 19

June 2009 | PHY2F | Original Q4 | Legacy

4 A circuit was set up as shown in the diagram.

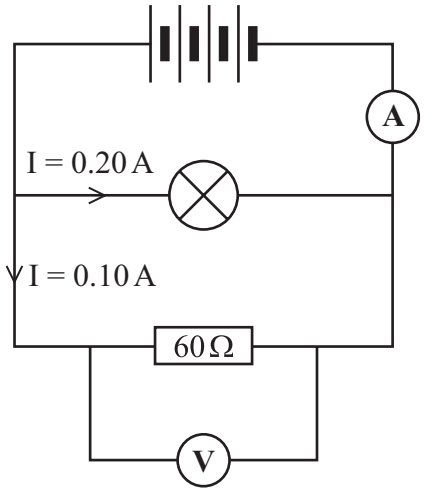

4 (a) Each cell provides a potential difference of 1.5 volts.

4 (a) (i) What is the total potential difference provided by the four cells in the circuit?

.....

Total potential difference = ... volts
(1 mark)

4 (a) (ii) What will be the reading on the voltmeter?

.....
(1 mark)

4 (b) The current through the lamp is 0.20 amps.
The current through the resistor is 0.10 amps.

What is the reading on the ammeter?

.....

Reading on ammeter = ... amps
(1 mark)

4.2.1.3 Current, resistance and potential difference

Question 19 · continued

for mark

4 (c) Use a phrase from the box to complete the following sentence.

greater than	**equal to**	**smaller than**

The resistance of the lamp is ..... 60 Ω.

Give a reason for your answer.

.....

.....

(2 marks)

5

Turn over for the next question

4.2.1.3 Current, resistance and potential difference

Question 20

June 2009 | PHY2F | Original Q8 | Legacy

8 (a) A plastic ruler is rubbed with a cloth.

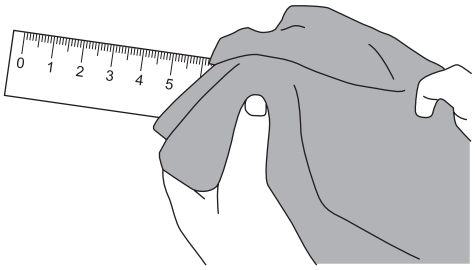

The ruler becomes negatively charged.

8 (a) (i) Complete the following sentence by drawing a ring around the correct line in the box.

The ruler becomes negatively charged because it has

gained electrons
lost neutrons
lost protons

.

(1 mark)

8 (a) (ii) How could you show that the ruler is charged?

.....

.....

(1 mark)

Question 8 continues on the next page

Question 20 · continued

for mark

8 (b) People often become electrostatically charged as they get out of a car.
This happens because their clothing rubs against the car seat.

A scientist was asked to find out whether the amount of charge on a person depended on the type of material which covered the car seat.
Three people, **A**, **B** and **C**, were used to test three different types of seat covering.

In each test, the person got out of the car and stood on a thick sheet of plastic.
The scientist then measured the potential difference between the person and the car body.
The results of the investigation are displayed in the bar chart.

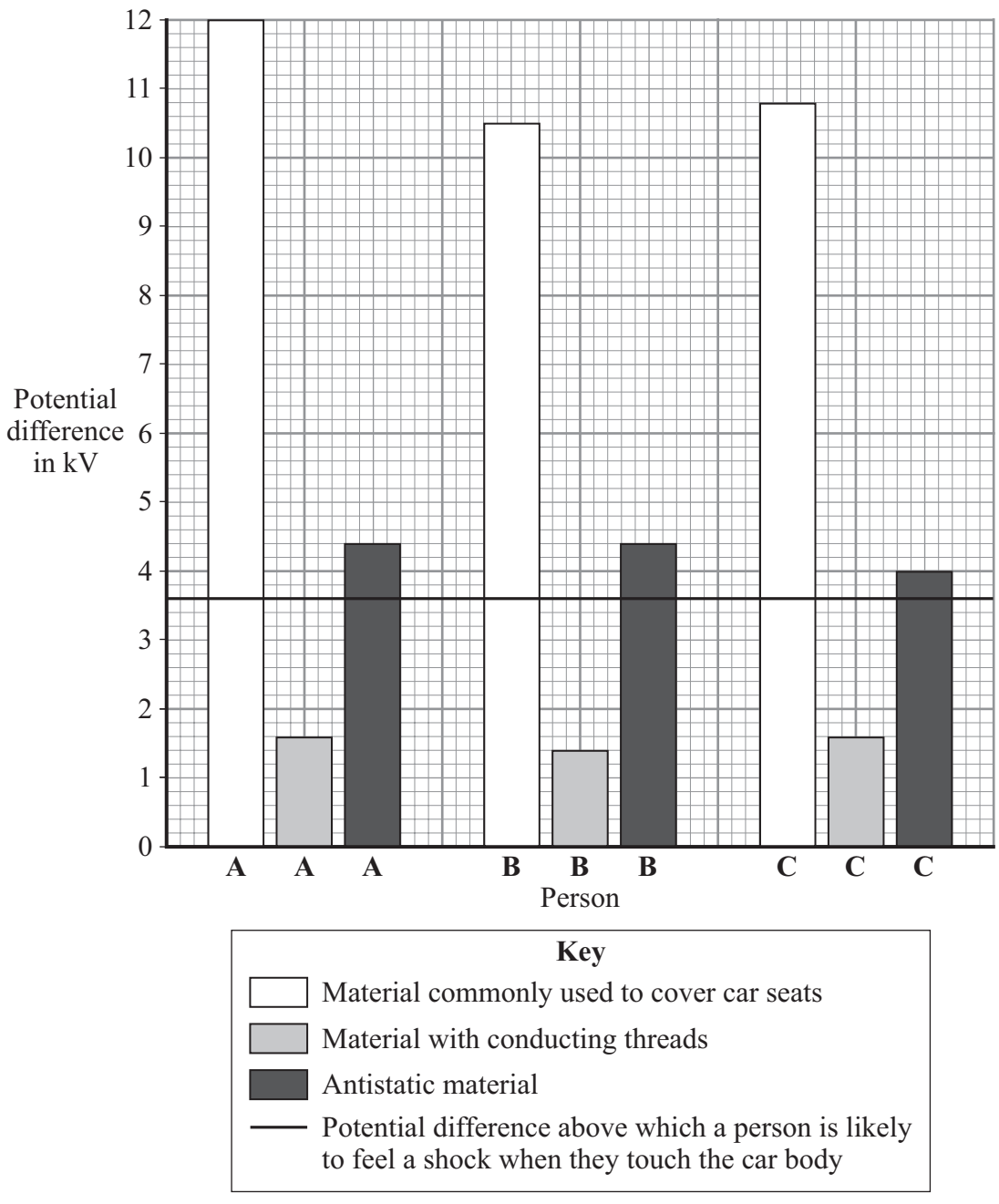

4.2.1.3 Current, resistance and potential difference

Question 20 · continued

for mark

8 (b) (i) Explain why the measurement was made with the person standing on a thick sheet of plastic.

.....

.....

.....

.....

(2 marks)

8 (b) (ii) To make this a fair test, the three people, **A**, **B** and **C**, each wore the same type of clothing.

Suggest a reason why this was important.

.....

.....

(1 mark)

8 (b) (iii) The smallest scale division on the voltmeter was 0.1 kV.

Suggest why, from the data, it was **not** necessary to increase the precision of the potential difference measurements.

.....

.....

(1 mark)

8 (b) (iv) Explain why this investigation may cause a manufacturer to change the material used to cover car seats.

.....

.....

.....

.....

(2 marks)

8

4.2.1.3 Current, resistance and potential difference

Question 21

June 2009 | PHY3F | Original Q8 | Legacy

8 The diagram shows some parts of a torch which works without batteries.
The coil is part of a complete circuit with the LED (light-emitting diode).

You have to shake the torch for a short time and then it is ready to use.

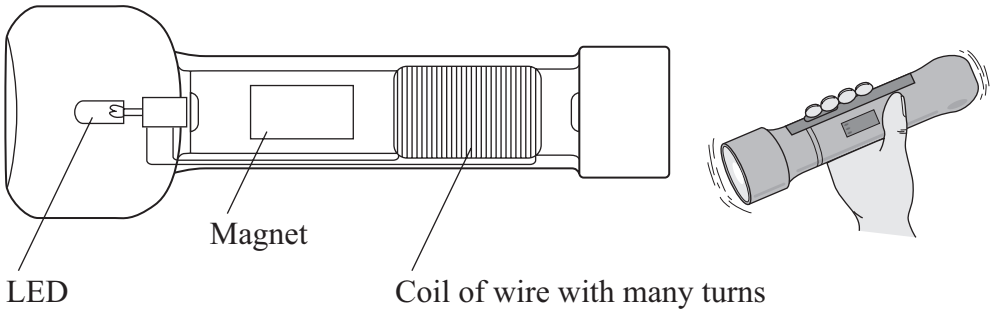

8 (a) Arrange the letters, **A**, **B**, **C**, **D** and **E**, in the correct order to explain how shaking the torch produces an electric current.

A An electric current is induced in the circuit.

B The magnetic field cuts through the coil.

C The magnet moves in and out of the coil.

D A potential difference (p.d.) is induced across the ends of the coil.

E The torch is shaken to and fro.

The first letter has been done for you.

E				

(2 marks)

8 (b) Give **two** changes which you would make to the design of the torch to increase the size of the induced potential difference.

1 .....

.....

2 .....

.....

(2 marks)

4.2.1.3 Current, resistance and potential difference

Question 21 · continued

for mark

8 (c) A few minutes after shaking, the LED gets dimmer and then stops giving out light.

A student tests the torch. She shakes it for a period of time. Then she switches it on and times how long the light lasts.

These are her results.

Period of time torch is shaken measured in seconds	How long the light lasts measured in seconds
30	168
60	312
90	420
120	546
150	654

8 (c) (i) What conclusion can the student come to on the basis of these results?

.....

.....

(1 mark)

8 (c) (ii) The student's friend says that the results are **not** reliable. Her friend is correct.

Give **two** reasons why.

1 .....

.....

.....

2 .....

.....

.....

(2 marks)

7

4.2.1.3 Current, resistance and potential difference

Question 22

1 A circuit diagram is shown below.

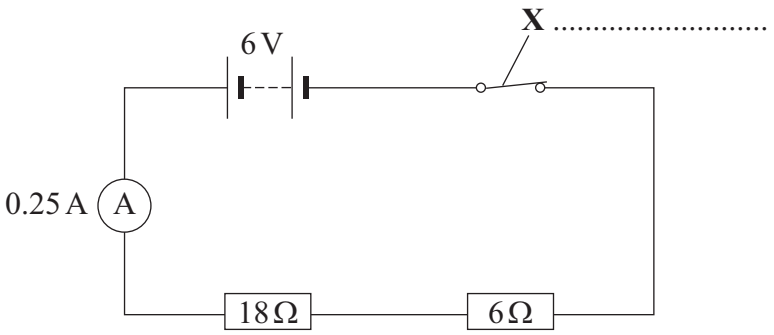

1 (a) Use a word from the box to label component **X**.

fuse	**switch**	**thermistor**

(1 mark)

1 (b) Calculate the total resistance of the two resistors in the circuit.

.....

Total resistance = ... Ω

(1 mark)

1 (c) The reading on the ammeter is 0.25 A.

The current through the 6 Ω resistor will be:

bigger than 0.25 A **equal to 0.25 A** **smaller than 0.25 A**

Draw a ring around your answer.

(1 mark)

1 (d) The 6 V battery is made by correctly joining several 1.5 V cells in series.

Calculate the number of cells needed to make the battery.

.....

Number of cells = ...

(1 mark)

4

4.2.1.3 Current, resistance and potential difference

Question 23

5 The diagram shows a simple circuit.

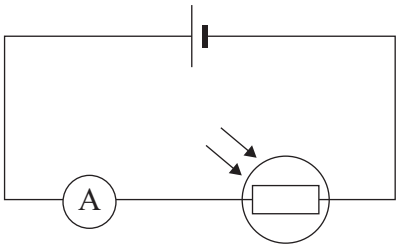

5 (a) The circuit includes an LDR.

What do the letters LDR stand for?

Draw a ring around your answer.

Light-dependable resistor **light-dependent resistor** **light-direct resistor**

(1 mark)

5 (b) The graph shows how the resistance of an LDR changes with light intensity.

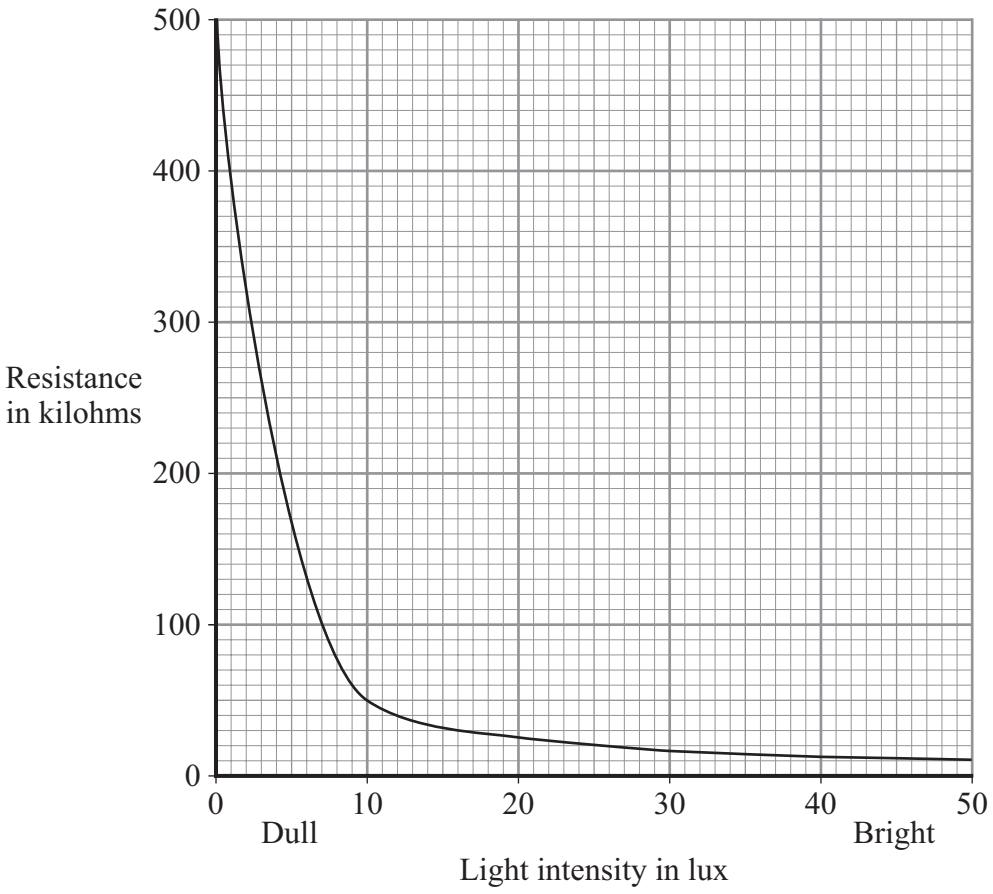

4.2.1.3 Current, resistance and potential difference

Question 23 · continued

for mark

Describe in detail how the resistance of the LDR changes as the light intensity increases from 0 to 50 lux.

.....

.....

.....

.....

.....

.....

(3 marks)

5 (c) (i) Complete the following sentence by drawing a ring around the correct line in the box.

A decrease in the light intensity of light on the LDR will [decrease / not change / increase] the reading on the ammeter.

(1 mark)

5 (c) (ii) Give a reason for your answer to part (c)(i).

.....

.....

(1 mark)

5 (d) An LDR can be used to switch a circuit on and off automatically.

In which **one** of the following would an LDR be used?

Put a tick (✓) in the box next to your answer.

a circuit to switch on central heating when it gets cold ☐

a circuit to switch on security lighting when it gets dark ☐

a circuit to switch on a water sprinkler when the soil in a greenhouse is dry ☐

(1 mark)

7

4.2.1.3 Current, resistance and potential difference

Question 24

June 2010 | PHY2F | Original Q2 | Legacy

2 Complete each of the following sentences, **A**, **B**, **C**, **D** and **E**, by choosing the correct ending from **K**, **L**, **M**, **N** or **O**.

The first one has been done for you.

A The current through a resistor depends ..... **O**

B A direct current ..... ☐

C In a series circuit, the potential difference ..... ☐

D An alternating current ..... ☐

E In a parallel circuit, the potential difference ..... ☐

K ..... across each component is the same.

L ..... is supplied by a cell or battery.

M ..... is constantly changing direction.

N ..... of the power supply is shared by the components.

O ..... on the potential difference across the resistor.

(3 marks)

3

4.2.1.3 Current, resistance and potential difference

Question 25

June 2010 | PHY3F | Original Q4 | Legacy

4 A teacher demonstrates a small transformer.

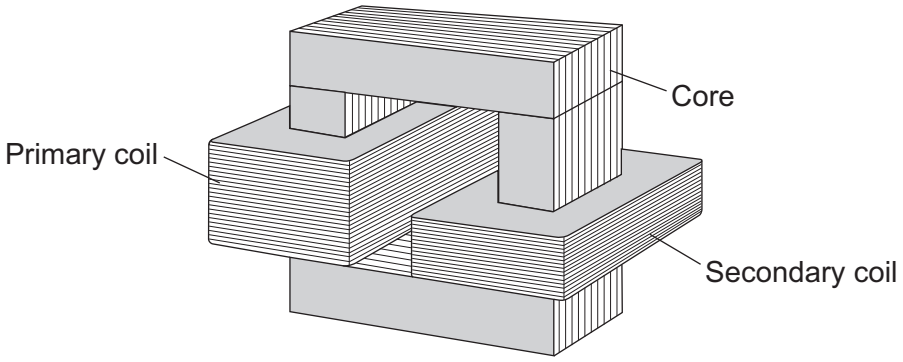

4 (a) (i) What is the core made of?

Draw a ring around the correct word in the box.

aluminium	**copper**	**iron**

(1 mark)

4 (a) (ii) The potential difference (p.d.) across the secondary coil is less than the p.d. across the primary coil.

What sort of transformer is it?

.....

(1 mark)

4 (b) Where is a step-up transformer used as part of the National Grid?

.....

(1 mark)

4.2.1.3 Current, resistance and potential difference

Question 25 · continued

4 (c) The teacher writes a note about the transformer but leaves **five** spaces.

Use the correct words from the box to complete the spaces.

coil	**core**	**current**	**ends**	**field**	**wire**

A transformer works because an alternating ..... in the primary ..... produces a changing magnetic ..... in the ..... and then in the secondary coil.

This induces an alternating potential difference across the ..... of the secondary coil.

(5 marks)

8

Turn over for the next question

4.2.1.3 Current, resistance and potential difference

Question 26

January 2011 | PHY2F | Original Q2 | Legacy

2 (a) The lamps in the circuits drawn below are all identical.
Each of the cells has a potential difference of 1.5 volts.

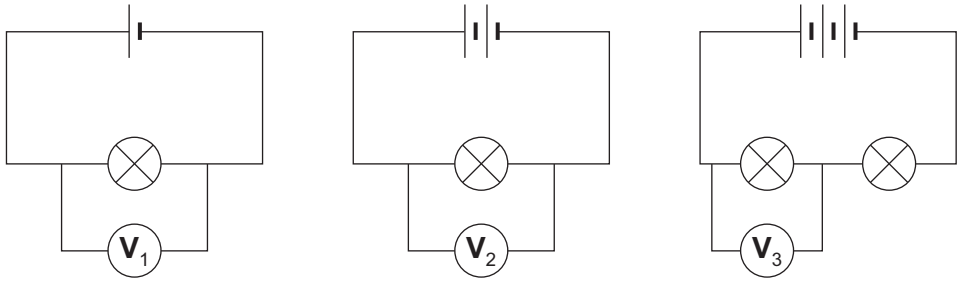

2 (a) (i) What is the potential difference across the 3 cells that are joined in series?

.....

Potential difference = ... V
(1 mark)

2 (a) (ii) What will be the reading on the voltmeter labelled V_3?

Voltmeter reading V_3 = ... V
(1 mark)

2 (a) (iii) Which voltmeter, V_1, V_2 or V_3, will give the highest reading?

Draw a ring around your answer.

V_1 V_2 V_3

(1 mark)

Question 2 continues on the next page

4.2.1.3 Current, resistance and potential difference

Question 26 · continued

2 (b) The diagram below shows a simple circuit.

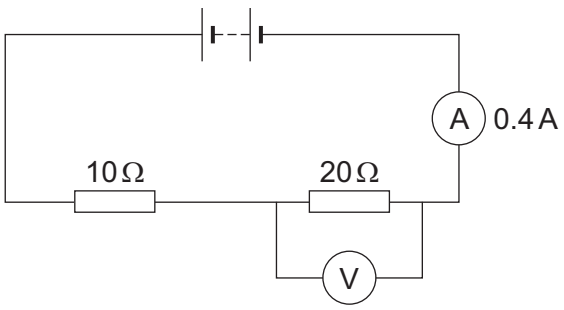

2 (b) (i) Calculate the total resistance of the two resistors in the circuit.

.....

Total resistance = ... Ω

(1 mark)

2 (b) (ii) Use the equation in the box to calculate the reading on the voltmeter.

potential difference = current × resistance

Show clearly how you work out your answer.

.....

.....

Voltmeter reading = ... V

(2 marks)

4.2.1.3 Current, resistance and potential difference

Question 26 · continued

2 (b) (iii) The current through a resistor at constant temperature changes when the potential difference across the resistor changes.

Which **one** of the graphs, **X**, **Y** or **Z**, shows how the current changes?

Write your answer, **X**, **Y** or **Z**, in the box.

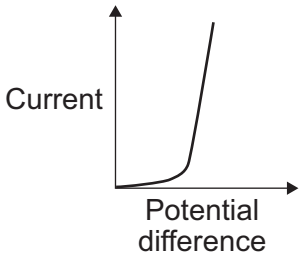

X

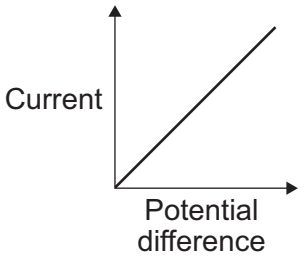

Y

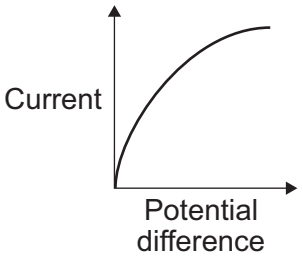

Z

Graph

(1 mark)

7

4.2.1.3 Current, resistance and potential difference

Question 27

January 2011 | PHY2F | Original Q4 | Legacy

4 The diagrams show the inside of a 13 amp plug.

4 (a) (i) Which **one** of the plugs, **A**, **B**, **C** or **D**, is correctly wired?

Write your answer, **A**, **B**, **C** or **D**, in the box.

A

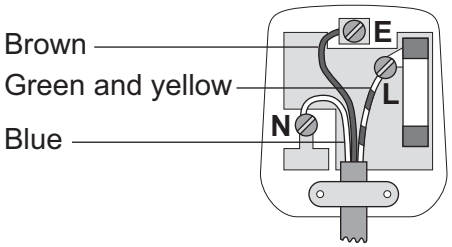

B

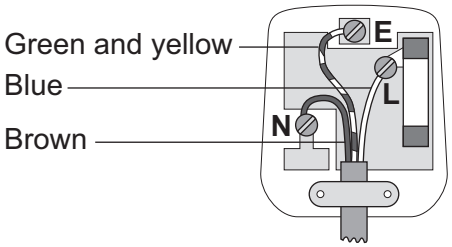

C

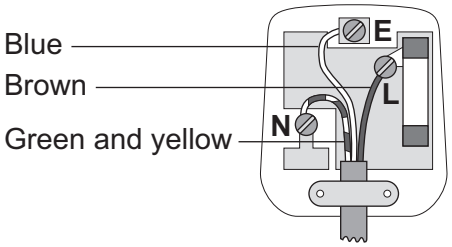

D

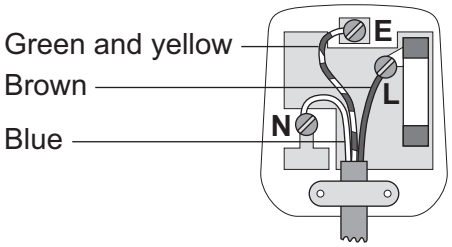

The plug that is correctly wired is ☐ .

(1 mark)

4 (a) (ii) What material is the outside casing of a plug made from?

.....

(1 mark)

4 (b) An electric drill draws a current of 2 amps from the 230 volt mains electricity supply.

Use the equation in the box to calculate the power of the drill.

power = current × potential difference

Show clearly how you work out your answer.

.....

.....

Power ..... watts

(2 marks)

4.2.1.3 Current, resistance and potential difference

Question 27 · continued

4 (c) A householder needs to replace a damaged plug. Most replacement plugs are sold with a 13 amp fuse fitted inside. The householder thinks it would be better for shops to sell the plugs without a fuse. He could then buy either a 3 A, 5 A or 13 A fuse to fit inside the plug.

Explain an advantage of selling plugs without a fuse, rather than with a 13 amp fuse fitted.

.....

.....

.....

.....

(2 marks)

6

Turn over for the next question

4.2.1.3 Current, resistance and potential difference

Question 28

June 2011 | PHY2F | Original Q4 | Legacy

4 (a) A student takes off his nylon fleece and feels a small electric shock.
He realises that this happens because his fleece becomes charged.

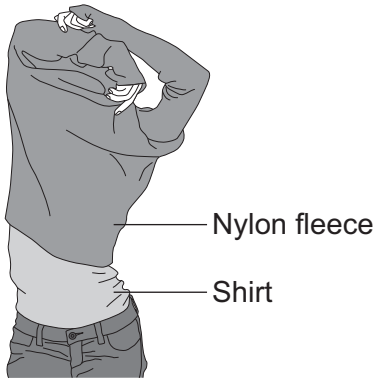

Explain why the fleece becomes charged.

.....

.....

.....

.....

.....

(2 marks)

4 (b) Only **two** of the following statements are correct.

Put a tick (✓) in the boxes next to the **two** correct statements.

Positively charged objects repel negatively charged objects. ☐

Electrical charges move easily through metals. ☐

Static electricity is safe; it never causes any danger. ☐

An electric current is a flow of electrical charge. ☐

(2 marks)

4.2.1.3 Current, resistance and potential difference

Question 28 · continued

4 (c) The diagram shows a lightning conductor attached to the side of a tall building.

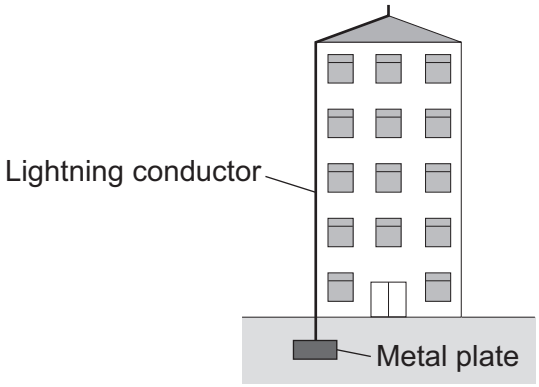

If the building is struck by lightning, charge flows to earth through the lightning conductor.

4 (c) (i) Which of the materials in the list is used to make the lightning conductor?

Draw a ring around your answer.

copper **glass** **plastic**

Give a reason for your answer.

.....

.....

.....

(2 marks)

4 (c) (ii) Complete the sentence by drawing a ring around the correct line in the box.

The resistance of the lightning conductor is

higher than
the same as
lower than

the resistance of the building.

(1 mark)

4 (c) (iii) It is almost impossible to test different designs of lightning conductor in controlled experiments during a lightning storm.

Suggest a reason why.

.....

.....

(1 mark)

8

4.2.1.3 Current, resistance and potential difference

Question 29

June 2011 | PHY2F | Original Q6 | Legacy

6 **Diagram 1** shows a hairdryer.
Diagram 2 shows how the heaters and fan of the hairdryer are connected to a 3-pin plug.
The hairdryer does not have an earth wire.

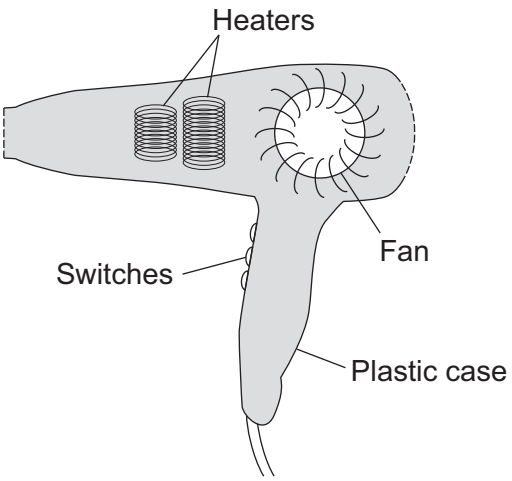

Diagram 1

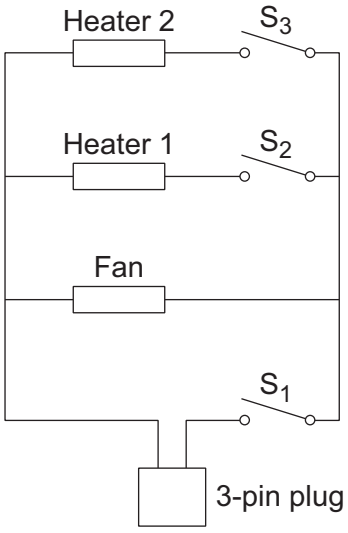

Diagram 2

6 (a) What colour is the insulation around the wire connected to the live pin inside the plug?

.....

(1 mark)

6 (b) Why does the hairdryer **not** need an earth wire?

.....

.....

(1 mark)

6 (c) All the switches are shown in the OFF position.

6 (c) (i) Which switch or switches have to be ON to make:

(1) only the fan work; .....

(2) heater 2 work? .....

(2 marks)

4.2.1.3 Current, resistance and potential difference

Question 29 · continued

6 (c) (ii) The heaters can only be switched on when the fan is also switched on.

Explain why.

.....

.....

.....

.....

.....

(2 marks)

6 (d) The table shows the current drawn from the 230 volt mains electricity supply when different parts of the hairdryer are switched on.

	Current in amps
Fan only	1.0
Fan and heater 1	4.4
Fan and both heaters	6.5

Use the equation in the box to calculate the maximum power of the hairdryer.

power = current × potential difference

Show clearly how you work out your answer and give the unit.

.....

.....

Maximum power = ...

(3 marks)

9

4.2.1.3 Current, resistance and potential difference

Question 30

June 2012 | PH2FP | Original Q2 | Legacy

2 (a) The diagram shows a simple circuit.

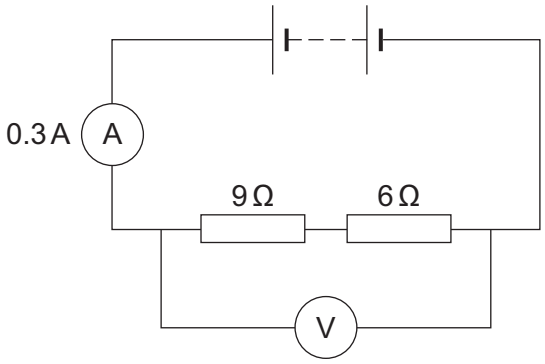

2 (a) (i) Calculate the total resistance of the two resistors in the circuit.

.....

Total resistance = ... Ω

(1 mark)

2 (a) (ii) Calculate the reading on the voltmeter.

Use the correct equation from the Physics Equations Sheet.

Show clearly how you work out your answer.

.....

.....

Voltmeter reading = ... V

(2 marks)

2 (a) (iii) Draw a ring around the correct answer in the box to complete the sentence.

Replacing one of the resistors with a resistor of higher value will

decrease
not change
increase

the reading on the ammeter.

(1 mark)

4.2.1.3 Current, resistance and potential difference

Question 30 · continued

2 (b) The voltmeter in the circuit is replaced with an oscilloscope.

Which one of the diagrams, **X**, **Y** or **Z**, shows the trace that would be seen on the oscilloscope?

Write your answer, **X**, **Y** or **Z**, in the box.

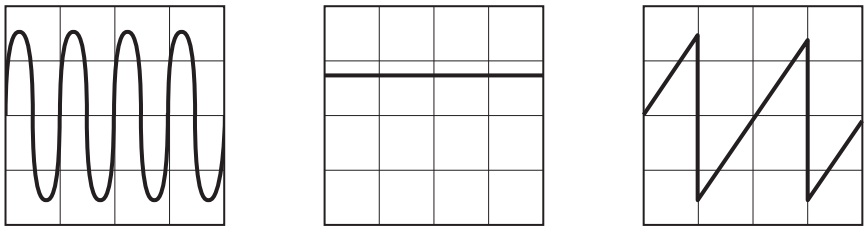

X **Y** **Z**

Diagram ☐

Give a reason for your answer.

.....

.....

.....

(2 marks)

6

4.2.1.3 Current, resistance and potential difference

Question 31

June 2012 | PH2FP | Original Q4 | Legacy

4 A student used the apparatus below to find out how the resistance of a light-dependent resistor (LDR) depends on light intensity.

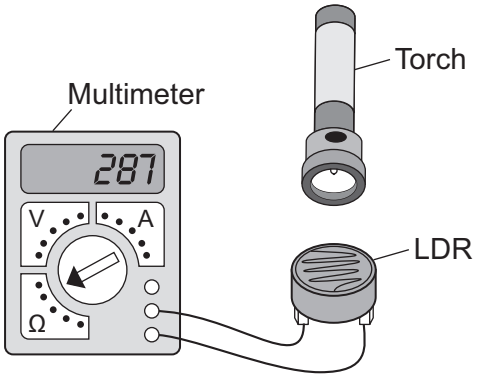

The resistance of the LDR was measured directly using a multimeter.

4 (a) (i) Which **one** of the following is the correct circuit symbol for a LDR?

Draw a ring around your answer.

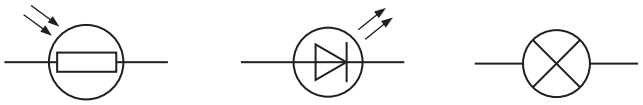

(1 mark)

4 (a) (ii) Name **one** factor that will affect the intensity of the light hitting the LDR.

.....

.....

(1 mark)

Question 4 continues on the next page

4.2.1.3 Current, resistance and potential difference

Question 31 · continued June 2012 | PH2FP | Original Q4 | Legacy

4 (b) The manufacturer of the LDR provides data for the LDR in the form of a graph.

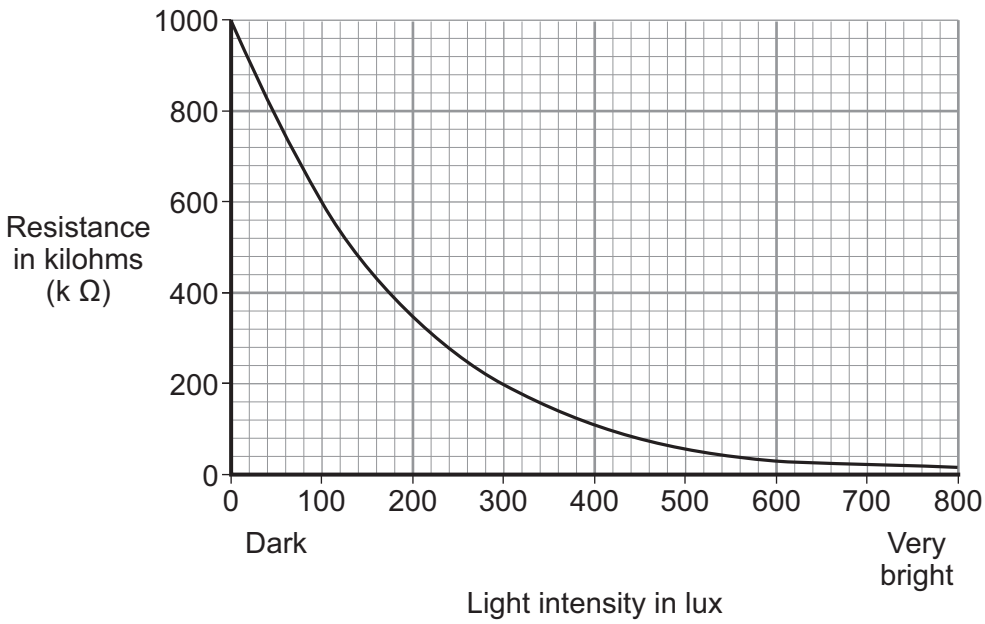

Describe how the resistance of the LDR changes when the light intensity increases from 100 lux to 300 lux.

.....

.....

.....

(2 marks)

4.2.1.3 Current, resistance and potential difference

Question 31 · continued

4 (c) The student only obtained three results. These are given in the table.

Light intensity	Resistance in kilohms
Dark	750
Bright	100
Very bright	1

4 (c) (i) The student could **not** use the results to draw a line graph.
Why not?

.....

.....

(1 mark)

4 (c) (ii) Do the student's results agree with the data the manufacturer provided?

Draw a ring around your answer. YES NO

Give a reason for your answer.

.....

.....

.....

(1 mark)

4 (d) Which **one** of the following circuits probably includes a LDR?

Tick (✓) **one** box.

A circuit that automatically switches outside lights on when it gets dark. ☐

A circuit that automatically switches central heating on and off. ☐

A circuit that automatically turns lights off when no one is in the room. ☐

(1 mark)

7

4.2.1.3 Current, resistance and potential difference

Question 32

January 2013 | PH2FP | Original Q3 | Legacy

3 (a) Electrical circuits often contain resistors.
The diagram shows **two** resistors joined in series.



Calculate the total resistance of the **two** resistors.

.....

Total resistance = ... Ω
(1 mark)

3 (b) A circuit was set up as shown in the diagram. The three resistors are identical.

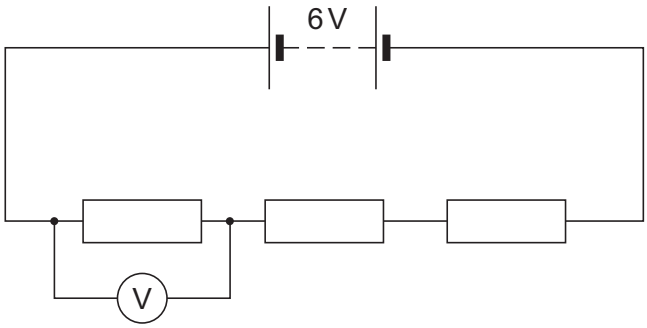

3 (b) (i) Calculate the reading on the voltmeter.

.....

.....

Reading on voltmeter = ... V
(2 marks)

4.2.1.3 Current, resistance and potential difference

Question 32 · continued

3 (b) (ii) The same circuit has now been set up with two ammeters.

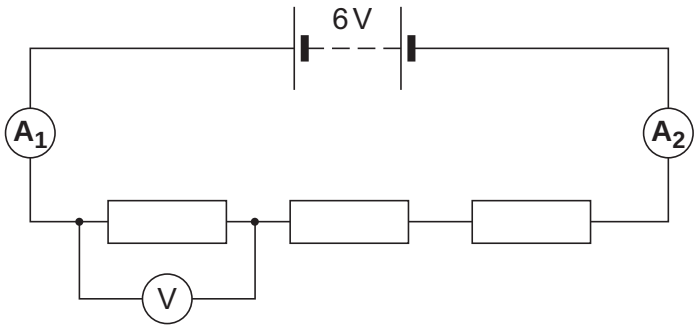

Draw a ring around the correct answer in the box to complete the sentence.

The reading on ammeter A_2 will be

smaller than
equal to
greater than

the reading on ammeter A_1.

(1 mark)

4

4.2.1.3 Current, resistance and potential difference

Question 33

June 2013 | PH2FP | Original Q2 | Legacy

2 The diagrams show oscilloscope traces. Three different alternating current (a.c.) electricity supplies, **J**, **K** and **L**, produce these traces.

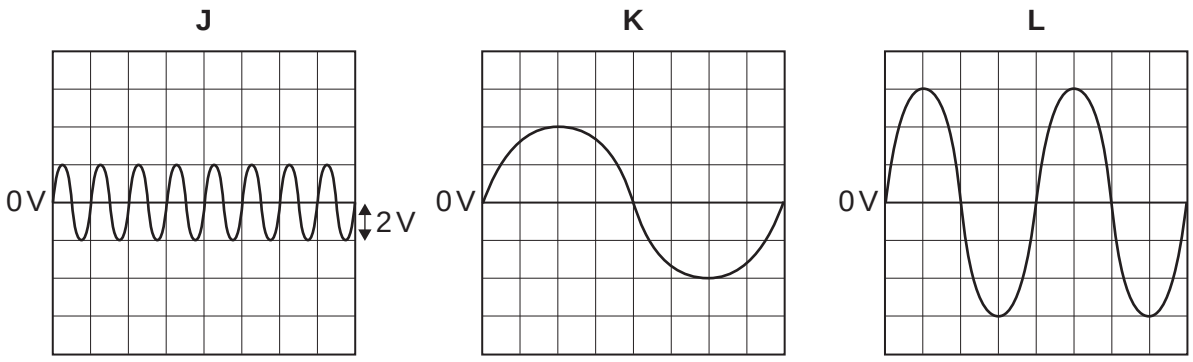

In each diagram, one vertical division on the oscilloscope screen represents 2 volts.

2 (a) Which **one** of the electricity supplies, **J**, **K** or **L**, has the largest peak potential difference?

Write your answer, **J**, **K** or **L**, in the box. ☐

(1 mark)

2 (b) Calculate the value of the largest peak potential difference.

.....

Largest peak potential difference = ... V

(1 mark)

2 (c) The oscilloscope is now connected across a 3 V battery. The battery supplies direct current (d.c.). The settings on the oscilloscope are **not** changed.

On the diagram below draw the trace you would see on the oscilloscope screen.

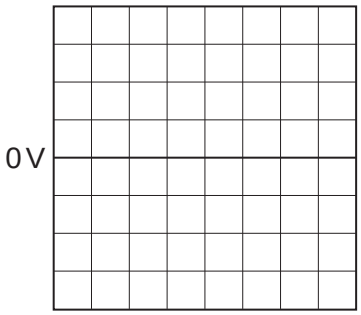

(2 marks)

4

4.2.1.3 Current, resistance and potential difference

Question 34

June 2013 | PH2FP | Original Q8 | Legacy

8 (a) The diagram shows the circuit used to obtain the data needed to plot the current–potential difference graph for a filament bulb.

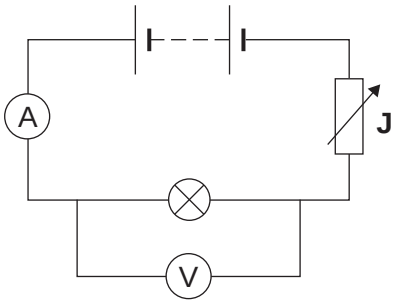

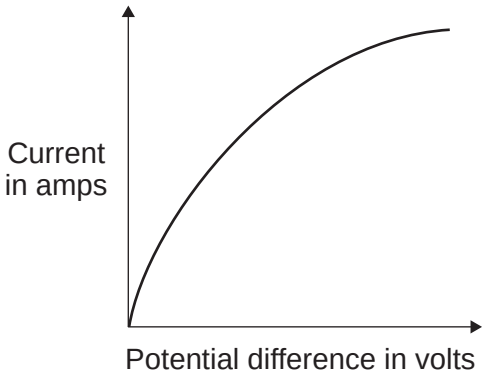

8 (a) (i) Why is the component labelled '**J**' included in the circuit?

.....

.....

(1 mark)

8 (a) (ii) The resistance of the bulb increases as the potential difference across the bulb increases. Why?

.....

.....

(1 mark)

8 (a) (iii) The bulb is at full brightness when the potential difference across the bulb is 12 V. The current through the bulb is then 3 A.

Calculate the power of the bulb when it is at full brightness and give the unit.

Use the correct equation from the Physics Equations Sheet.

.....

.....

.....

Power = ...

(3 marks)

4.2.1.3 Current, resistance and potential difference

Question 34 · continued

8 (b) *In this question you will be assessed on using good English, organising information clearly and using specialist terms where appropriate.*

The table gives data about two types of light bulb people may use in their homes.

Type of light bulb	Energy efficiency	Cost of one light bulb	Average lifetime in hours
Halogen	10%	£1.95	2 000
Light Emitting Diode (LED)	32%	£11.70	36 000

Both types of light bulb produce the same amount of light.

Evaluate, in terms of cost and energy efficiency, the use of the two types of light bulb.

To gain full marks you must compare both types of light bulb and conclude which light bulb would be the best to use.

.....

.....

.....

.....

.....

.....

.....

.....

.....

.....

.....

.....

.....

.....

.....

(6 marks)

11

4.2.1.3 Current, resistance and potential difference

Question 35

June 2013 | PH3FP | Original Q5 | Legacy

5 The diagram shows a 'G-machine'. The G-machine is used in astronaut training.

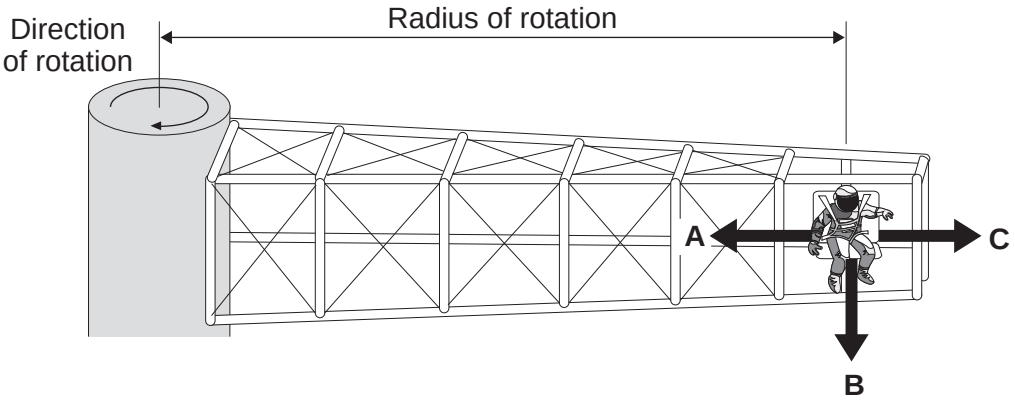

The G-machine moves the astronaut in a horizontal circle.

5 (a) In which direction, **A**, **B** or **C**, does the centripetal force on the astronaut act?

Write your answer in the box. ☐

(1 mark)

5 (b) The centripetal force on the astronaut is measured.

Graph X shows how the centripetal force is affected by the speed of rotation. The radius of rotation is kept the same.

Graph X

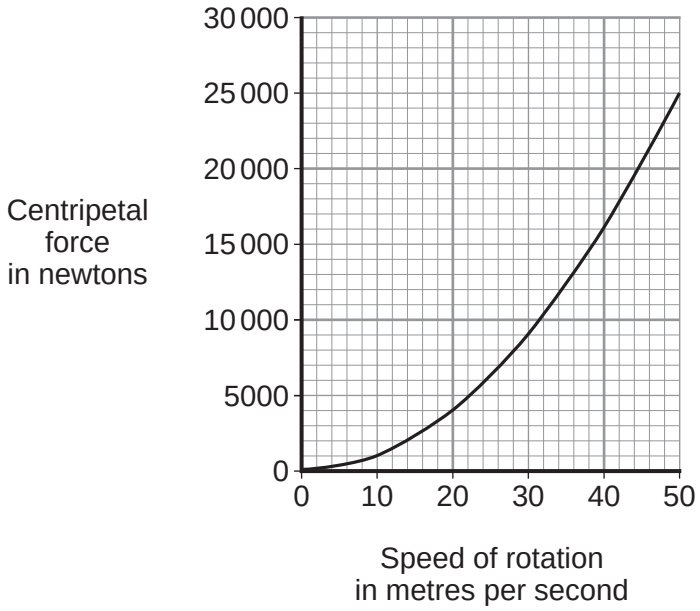

5 (b) (i) Use **Graph X** to determine the centripetal force on the astronaut when rotating at a speed of 30 metres per second.

Centripetal force = ... newtons

(1 mark)

4.2.1.3 Current, resistance and potential difference

Question 35 · continued

5 (b) (ii) Complete the following sentence to give the conclusion that can be made from **Graph X**.

Increasing the speed of rotation of a G-machine will ..... the centripetal force on the astronaut.

(1 mark)

5 (b) (iii) **Graph Y** shows how the centripetal force is affected by the radius of rotation, when the speed of rotation is kept the same.

Graph Y

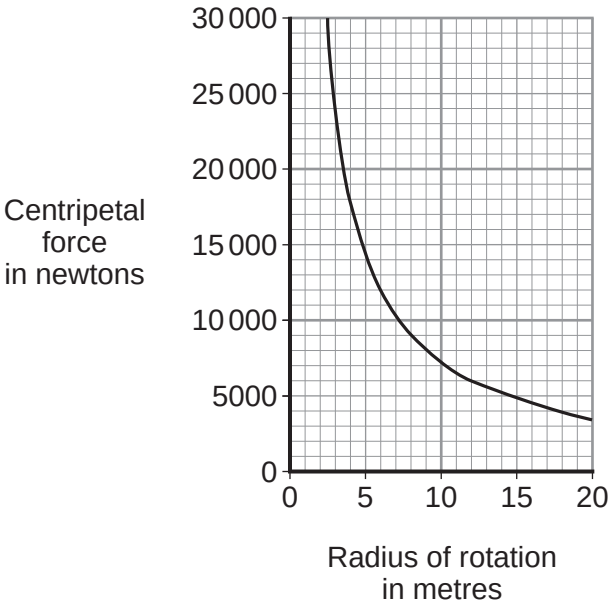

Complete the following sentence to give the conclusion that can be made from **Graph Y**.

The greater the radius of rotation, the ..... the centripetal force on the astronaut.

(1 mark)

Question 5 continues on the next page

4.2.1.3 Current, resistance and potential difference

Question 35 · continued

5 (c) The G-machine is rotated by an electric motor. The diagram shows a simple electric motor.

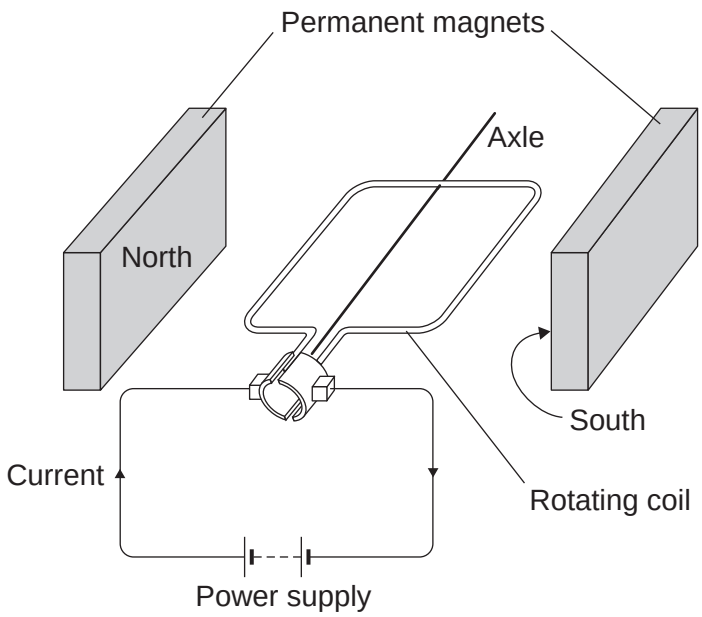

The following statements explain how the motor creates a turning force. The statements are in the wrong order.

M – The magnetic field interacts with the magnetic field of the permanent magnets.

N – A magnetic field is created around the coil.

O – The power supply applies a potential difference across the coil.

P – This creates a force that makes the coil spin.

Q – A current flows through the coil.

Arrange the statements in the correct order. Two of them have been done for you.

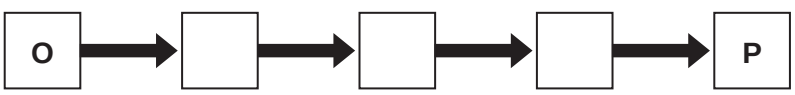

(2 marks)

4.2.1.3 Current, resistance and potential difference

Question 35 · continued

June 2013 | PH3FP | Original Q5 | Legacy

5 (d) The electric motor produces a turning force.

Give **two** ways of increasing the turning force.

1 .....

.....

2 .....

.....

(2 marks)

5 (e) Draw a ring around the correct answer to complete the sentence.

It costs a lot of money to send astronauts into space.

This is | an economic / an environmental / a social | issue.

(1 mark)

9

4.2.1.3 Current, resistance and potential difference

Question 36

June 2014 | PH2FP | Original Q3 | Legacy

3 (a) Draw **one** line from each circuit symbol to its correct name.

[3 marks]

Circuit symbol	Name
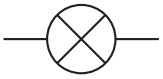	Diode
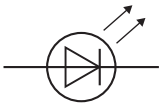	Light-dependent resistor (LDR)
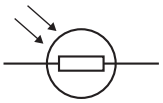	Lamp
	Light-emitting diode (LED)

Question 36 · continued

3 (b) **Figure 5** shows three circuits.

The resistors in the circuits are identical.

Each of the cells has a potential difference of 1.5 volts.

Figure 5

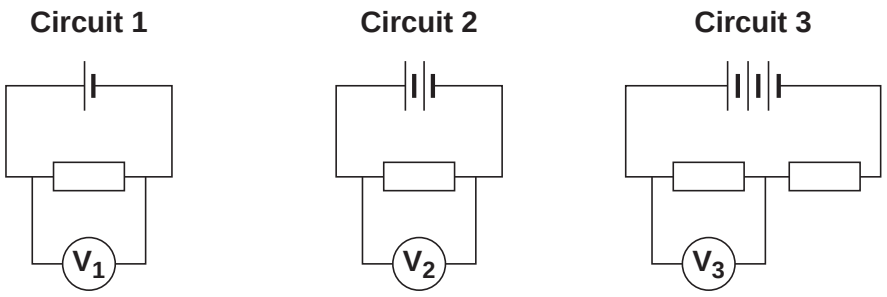

3 (b) (i) Use the correct answer from the box to complete the sentence.

[1 mark]

half	twice	the same as

The resistance of **circuit 1** is ..... the resistance of **circuit 3**.

3 (b) (ii) Calculate the reading on voltmeter $\mathbf{V_2}$.

[1 mark]

.....

Voltmeter reading $\mathbf{V_2}$ = ... V

3 (b) (iii) Which voltmeter, $\mathbf{V_1}$, $\mathbf{V_2}$ or $\mathbf{V_3}$, will give the lowest reading?

Draw a ring around the correct answer.

[1 mark]

$\mathbf{V_1}$ $\mathbf{V_2}$ $\mathbf{V_3}$

Question 3 continues on the next page

4.2.1.3 Current, resistance and potential difference

Question 36 · continued

3 (c) A student wanted to find out how the number of resistors affects the current in a series circuit.

Figure 6 shows the circuit used by the student.

Figure 6

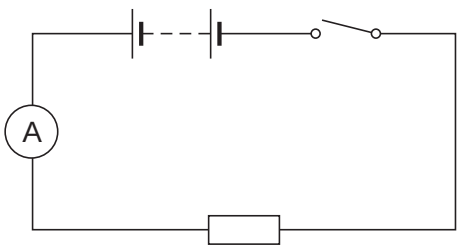

The student started with one resistor and then added more identical resistors to the circuit.

Each time a resistor was added, the student closed the switch and took the ammeter reading.

The student used a total of 4 resistors.

Figure 7 shows three of the results obtained by the student.

Figure 7

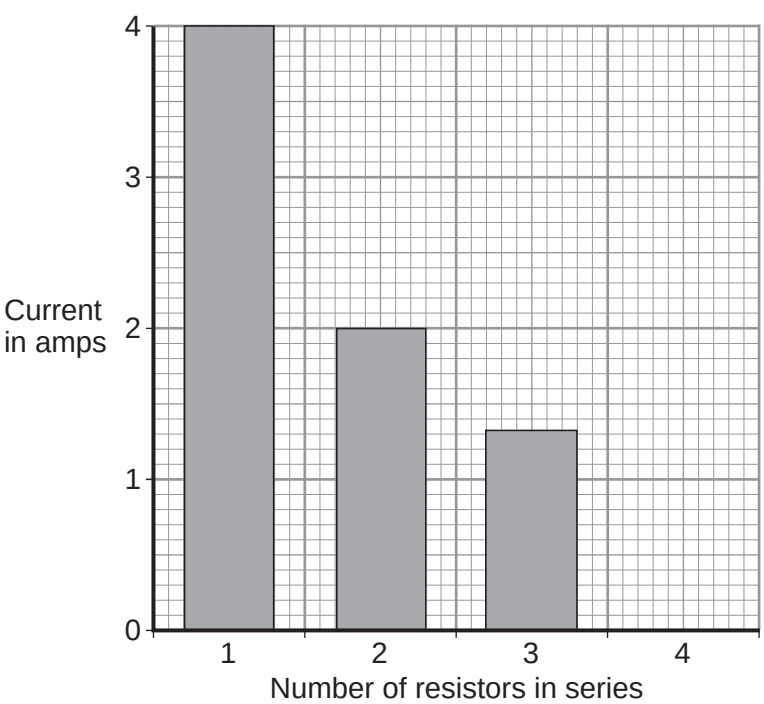

4.2.1.3 Current, resistance and potential difference

Question 36 · continued

3 (c) (i) To get valid results, the student kept one variable the same throughout the experiment.

Which variable did the student keep the same?

[1 mark]

.....

3 (c) (ii) The bar chart in **Figure 7** is not complete. The result using 4 resistors is not shown.

Complete the bar chart to show the current in the circuit when 4 resistors were used.

[2 marks]

3 (c) (iii) What conclusion should the student make from the bar chart?

[1 mark]

.....

.....

10

4.2.1.3 Current, resistance and potential difference

Question 37

June 2014 | PH3FP | Original Q9 | Legacy

9 (a) **In this question you will be assessed on using good English, organising information clearly and using specialist terms where appropriate.**

There are two types of traditional transformer; step-up and step-down.

Describe the similarities and differences between a step-up transformer and a step-down transformer.

You should include details of:

- construction, including materials used
- the effect the transformer has on the input potential difference (p.d.).

You should **not** draw a diagram.

[6 marks]

.....

.....

.....

.....

.....

.....

.....

.....

.....

.....

.....

.....

Extra space .....

.....

.....

.....

.....

.....

Question 9 continues on the next page

4.2.1.3 Current, resistance and potential difference

Question 37 · continued

9 (b) **Figure 15** shows a mobile phone and charger.

Figure 15

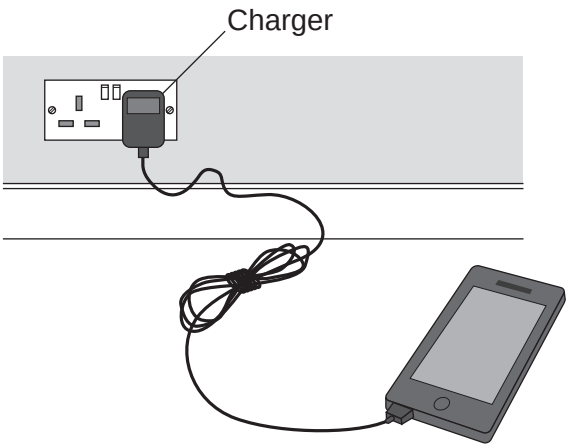

Mobile phone chargers use a different type of transformer, which is smaller and lighter than a traditional transformer.

What name is given to the type of transformer used in a mobile phone charger?

[1 mark]

.....

7

4.2.1.3 Current, resistance and potential difference

Question 38

June 2015 | PH2FP | Original Q1 | Legacy

1 **Figure 1** shows how the current through a filament bulb changes after the bulb is switched on.

Figure 1

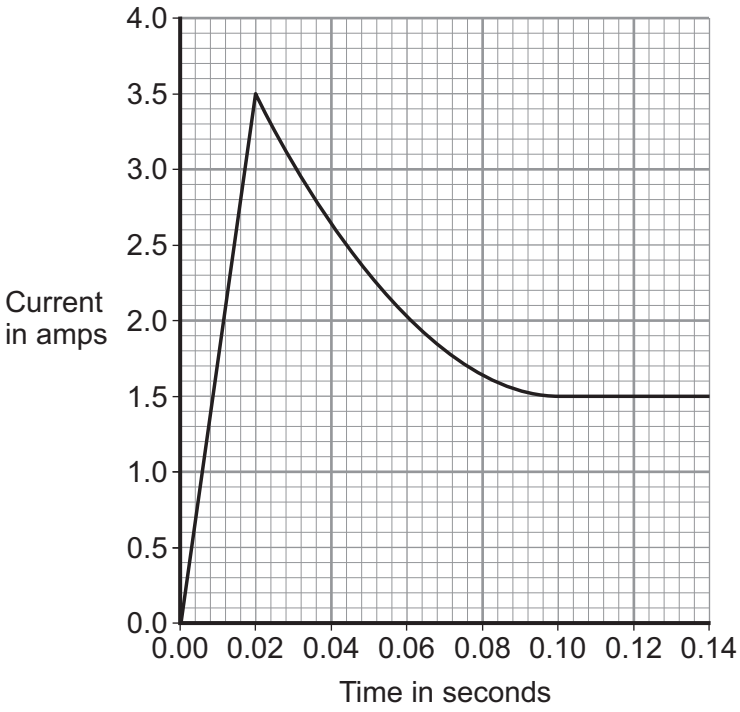

1 (a) What happens to the current through the bulb in the first 0.02 seconds after the bulb is switched on?

[1 mark]

.....

1 (b) Between 0.02 seconds and 0.08 seconds the current through the bulb decreases.

1 (b) (i) What, if anything, happens to the **resistance** of the bulb between 0.02 seconds and 0.08 seconds?

[1 mark]

Draw a ring around the correct answer.

decreases **does not change** **increases**

4.2.1.3 Current, resistance and potential difference

Question 38 · continued

1 (b) (ii) What, if anything, happens to the **temperature** of the bulb between 0.02 seconds and 0.08 seconds?

[1 mark]

Draw a ring around the correct answer.

decreases **does not change** **increases**

1 (c) The bulb is connected to a 12 V power supply.

Calculate the power of the bulb when the current through the bulb is 1.5 A.

Use the correct equation from the Physics Equations Sheet.

[3 marks]

Choose the unit from the list below.

coulomb **joule** **watt**

.....

.....

Power = ... unit .....

6

4.2.1.3 Current, resistance and potential difference

Question 39

June 2015 | PH2FP | Original Q7 | Legacy

7 (a) **Figure 9** shows the current–potential difference graph for three wires, **A**, **B** and **C**.

Figure 9

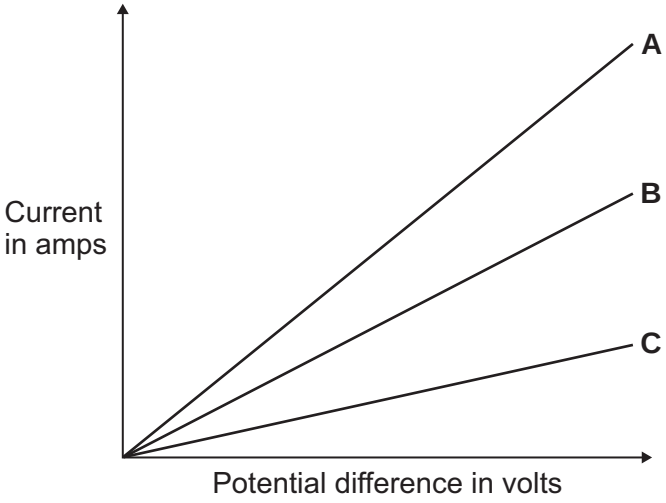

7 (a) (i) Using **Figure 9**, how can you tell that the temperature of each wire is constant?

[1 mark]

.....

.....

7 (a) (ii) Which **one** of the wires, **A**, **B** or **C**, has the greatest resistance?

[2 marks]

Write the correct answer in the box. ☐

Give a reason for your answer.

.....

.....

.....

4.2.1.3 Current, resistance and potential difference

Question 39 · continued

7 (b) A student measured the resistance of four wires.

Table 1 shows the resistance of, and other data about, each of the four wires, **J**, **K**, **L** and **M**.

Table 1

Wire	Type of metal	Length in cm	Diameter in mm	Resistance in .....
J	copper	50	0.17	0.36
K	copper	50	0.30	0.12
L	copper	100	0.30	0.24
M	constantan	100	0.30	7.00

7 (b) (i) The last column of **Table 1** should include the unit of resistance.

[1 mark]

What is the unit of resistance?

.....

7 (b) (ii) The resistance of a wire depends on many factors.

Look at **Table 1**. Which **two** wires from **J**, **K**, **L** and **M** show that the resistance of a wire depends on the **length** of the wire?

[2 marks]

Wire ☐ and wire ☐

Give a reason for your answer.

.....

.....

.....

Question 7 continues on the next page

4.2.1.3 Current, resistance and potential difference

Question 39 · continued

7 (b) (iii) A student looked at the data in **Table 1** and wrote this conclusion:

'The resistance of a wire depends on the type of metal from which the wire is made.'

The student could **not** be certain that her conclusion is true for **all** types of metal.

Suggest what extra data is needed for the student to be more certain that the conclusion is correct.

[1 mark]

.....

.....

.....

7 (c) The resistance of a wire can be calculated using the readings from an ammeter and a voltmeter.

7 (c) (i) Complete **Figure 10** by drawing a voltmeter in the correct position in the circuit. Use the correct circuit symbol for a voltmeter.

[1 mark]

Figure 10

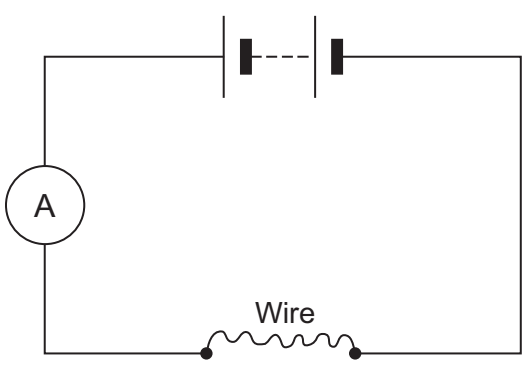

4.2.1.3 Current, resistance and potential difference

Question 39 · continued

7 (c) (ii) In a circuit diagram, a wire can be represented by the symbol for a resistor.

In the box below, draw the circuit symbol for a resistor.

[1 mark]

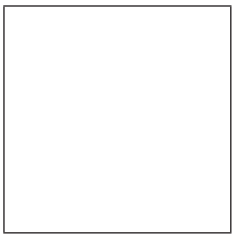

9

Turn over for the next question

4.2.1.3 Current, resistance and potential difference

Question 40

June 2015 | PH3FP | Original Q6 | Legacy

6 **Figure 11** shows a magnet moving into a coil of wire. This movement causes a reading on the voltmeter.

Figure 11

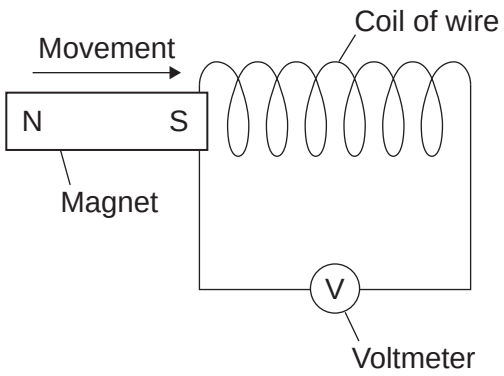

6 (a) Use the correct word from the box to complete the sentence.

[1 mark]

generated	**induced**	**produced**

Moving the magnet into the coil of wire causes a reading on the voltmeter because a potential difference is ..... across the ends of the wire.

6 (b) A student investigated how the number of turns on the coil of wire affects the maximum voltmeter reading. The student changed the number of turns on the coil of wire, then moved the magnet into the coil. The student recorded the maximum voltmeter reading.

To obtain valid data, suggest **two** variables that the student should control in this investigation.

[2 marks]

1 .....

.....

2 .....

.....

4.2.1.3 Current, resistance and potential difference

Question 40 · continued

6 (c) The student's results are shown in **Figure 12**.

Figure 12

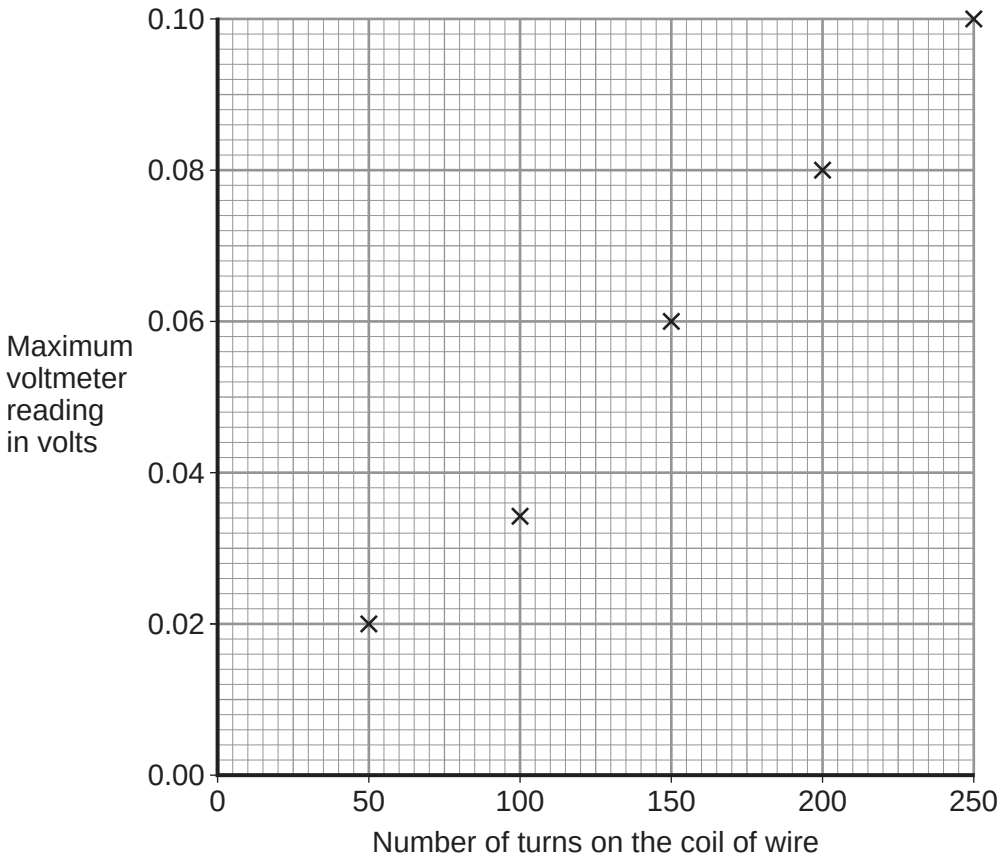

6 (c) (i) One of the results is anomalous.
Suggest a reason for the anomalous result.

[1 mark]

.....

6 (c) (ii) Draw a line of best fit on **Figure 12**.

[1 mark]

6 (d) A data-logger can automatically record and store data.

It may have been better for the student to have used a data-logger in his investigation rather than a voltmeter.

Suggest **one** reason why.

[1 mark]

.....

.....

6

4.2.1.3 Current, resistance and potential difference

Question 41

June 2016 | PH2FP | Original Q2 | Legacy

2 (a) **Figure 2** shows the oscilloscope trace an alternating current (a.c.) electricity supply produces.

Figure 2

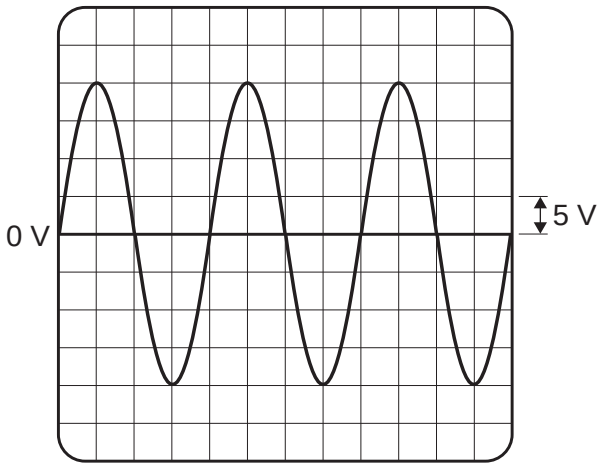

One vertical division on the oscilloscope screen represents 5 volts.

Calculate the peak potential difference of the electricity supply.

[1 mark]

Peak potential difference = _____ V

2 (b) Use the correct answer from the box to complete the sentence.

[1 mark]

40	**50**	**60**

In the UK, the frequency of the a.c. mains electricity supply is _____ hertz.

4.2.1.3 Current, resistance and potential difference

Question 41 · continued

2 (c) **Figure 3** shows how two lamps may be connected in series or in parallel to the 230 volt mains electricity supply.

Figure 3

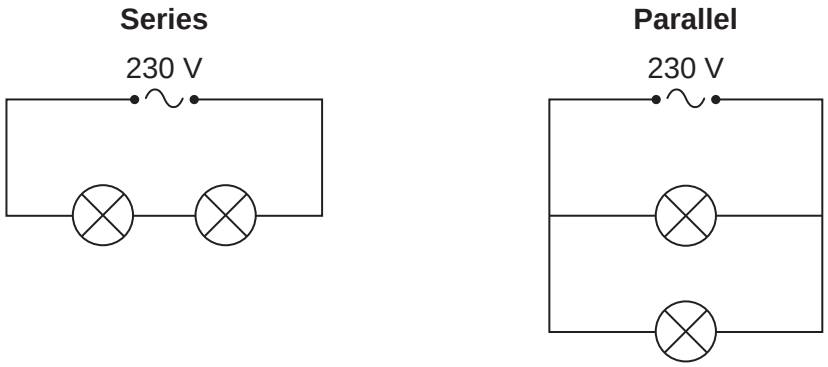

2 (c) (i) Calculate the potential difference across each lamp when the lamps are connected in **series**.
The lamps are identical.

[1 mark]

Potential difference when in series = _____ V

2 (c) (ii) What is the potential difference across each lamp when the lamps are connected in **parallel**?

[1 mark]

Tick (✓) **one** box.

115 V ☐ 230 V ☐ 460 V ☐

2 (c) (iii) Give **one** advantage of connecting the lamps in parallel instead of in series.

[1 mark]

Question 2 continues on the next page

4.2.1.3 Current, resistance and potential difference

Question 41 · continued

2 (d) **Figure 4** shows the light fitting used to connect a filament light bulb to the mains electricity supply.

Figure 4

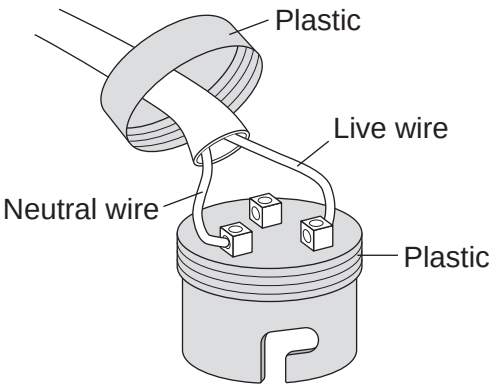

The light fitting does **not** have an earth wire connected.

Explain why the light fitting is safe to use.

[2 marks]

2 (e) A fuse can be used to protect an electrical circuit.

Name a different device that can also be used to protect an electrical circuit.

[1 mark]

8

4.2.1.3 Current, resistance and potential difference

Question 42

June 2016 | PH2FP | Original Q5 | Legacy

5 **Figure 8** shows an electrical circuit.

Figure 8

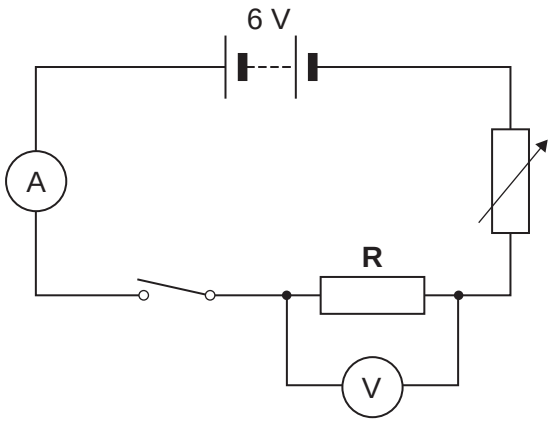

5 (a) The 6 V battery shown in **Figure 8** is made up of a number of identical 1.5 V cells.

Calculate the minimum number of cells needed to make the battery.

[1 mark]

Number of cells = _____

5 (b) The switch in **Figure 8** is shown in the open position. Closing the switch completes the circuit.
Charge flows through the completed circuit and a reading is shown on both the ammeter and the voltmeter.

5 (b) (i) In 10 seconds, 20 coulombs of charge flows through the circuit.

Calculate the current reading shown on the ammeter.

Use the correct equation from the Physics Equations Sheet.

[2 marks]

Current = _____ A

4.2.1.3 Current, resistance and potential difference

Question 42 · continued

5 (b) (ii) For 20 coulombs of charge to flow through the resistor **R**, 100 joules of work must be done.

Calculate the potential difference reading given by the voltmeter.

Use the correct equation from the Physics Equations Sheet.

[2 marks]

_____

_____

Potential difference = _____ V

5

Turn over for the next question

4.2.1.3 Current, resistance and potential difference

Question 43

June 2016 | PH2FP | Original Q7 | Legacy

7 **Figure 10** shows the apparatus used to investigate how the current through a thermistor depends on the temperature of the thermistor.

Figure 10

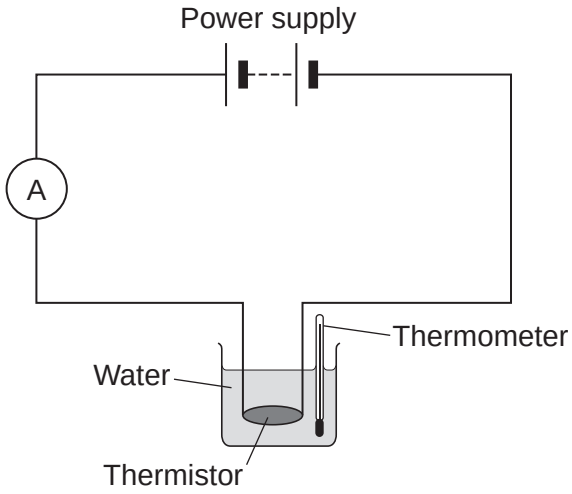

7 (a) Which **one** of the following is the correct circuit symbol for a thermistor?

[1 mark]

Tick (✓) **one** box.

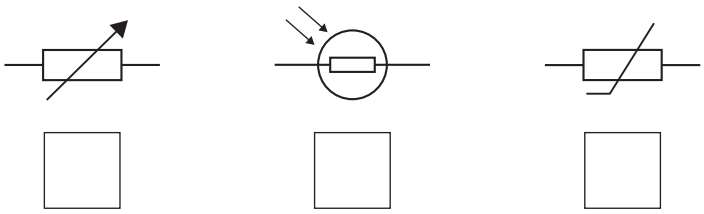

Question 7 continues on the next page

4.2.1.3 Current, resistance and potential difference

Question 43 · continued

7 (b) To get a range of results, hot water at 60 °C was poured into the beaker.
The temperature of the water and current through the thermistor were then recorded as the water cooled.

The results of the investigation are shown in **Figure 11**.

Figure 11

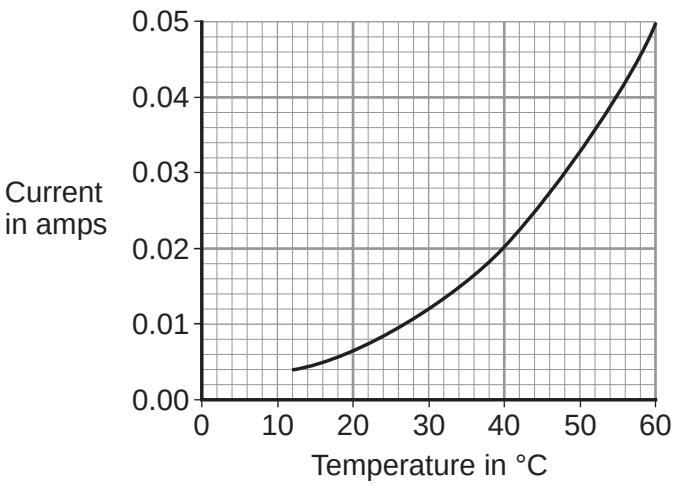

7 (b) (i) Suggest **one** way the investigation could have been changed to give a wider range of temperatures.

[1 mark]

_____

_____

7 (b) (ii) Describe how the current through the thermistor depends on the temperature of the thermistor.

[1 mark]

_____

_____

7 (b) (iii) Use **Figure 11** to determine the current through the thermistor at 40 °C.

[1 mark]

Current at 40 °C = _____ A

4.2.1.3 Current, resistance and potential difference

Question 43 · continued

7 (b) (iv) At 40 °C the thermistor has a resistance of 250 Ω.

Use your answer to part **(b)(iii)** and the resistance of the thermistor to calculate the potential difference across the thermistor.

Use the correct equation from the Physics Equations Sheet.

[2 marks]

_____

_____

_____

_____

Potential difference = _____ V

7 (b) (v) The potential difference across the thermistor stays the same all through the investigation.

What conclusion can be made from the results in **Figure 11** about the resistance of the thermistor as the temperature of the thermistor **decreases**?

[1 mark]

Tick (✓) **one** box.

the resistance increases ☐

the resistance does not change ☐

the resistance decreases ☐

7

4.2.1.3 Current, resistance and potential difference

Question 44

June 2016 | PH3FP | Original Q9 | Legacy

9 **Figure 12** shows the structure of a traditional transformer.

Figure 12

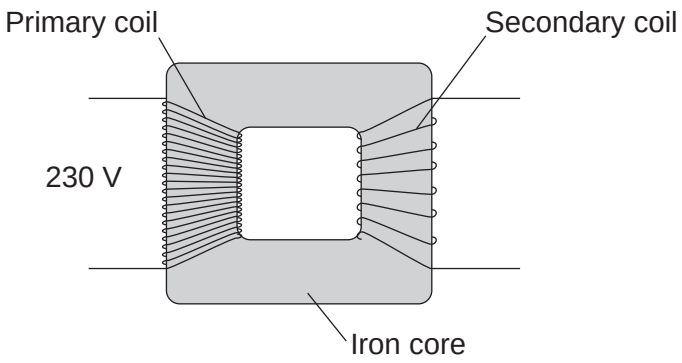

9 (a) There is an alternating current in the primary coil of the transformer.

State what is produced in the iron core.

[2 marks]

_____

_____

9 (b) A transformer has only **one** turn of wire on the secondary coil.
The potential difference across the secondary coil is 11.5 V
The potential difference across the primary coil is 230 V

Calculate the number of turns on the primary coil.

Use the correct equation from the Physics Equations Sheet.

[2 marks]

_____

_____

_____

_____

Number of turns on the primary coil = _____

Question 9 continues on the next page

Question 44 · continued

9 (c) In most transformers, the power output is less than the power input.

State why.

[1 mark]

9 (d) Two students investigated how magnets can be used to produce a potential difference. The students held a coil of wire above a magnet. The students quickly lowered the coil so that the magnet was inside the coil, as shown in **Figure 13**.

Figure 13

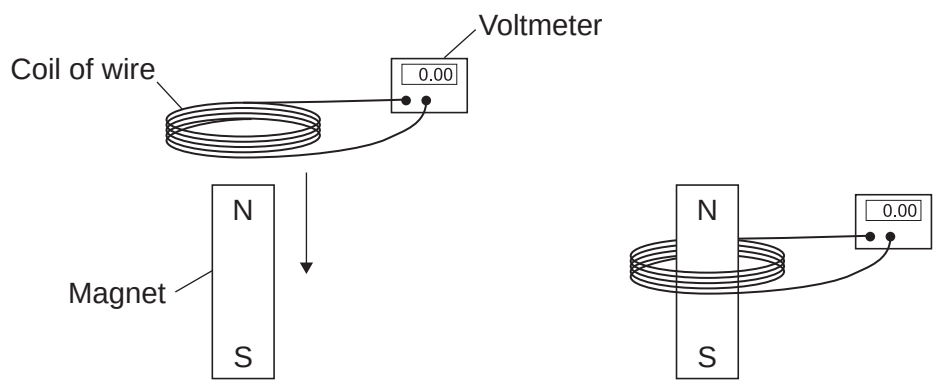

The students recorded the maximum potential difference for coils with different numbers of turns of wire. The results are shown in **Table 2**.

Table 2

Number of turns of wire in the coil	Maximum potential difference in volts	
	Results from student 1	Results from student 2
5	0.09	0.08
10	0.20	0.15
15	0.31	0.25
20	0.39	0.33
25	0.51	0.39

4.2.1.3 Current, resistance and potential difference

Question 44 · continued

June 2016 | PH3FP | Original Q9 | Legacy

9 (d) (i) State the resolution of the voltmeter.

Give **one** reason why the resolution of the voltmeter is suitable for this investigation.

[2 marks]

Resolution _____

Reason _____

_____

9 (d) (ii) The two students used exactly the same equipment to carry out their investigations. Both students recorded their results correctly.

Give the reason why student 2 got different results from student 1.

[1 mark]

_____

_____

9 (d) (iii) The students decided that even though the results were different, there was no need to repeat the investigation.

How do the results show that the investigation is reproducible?

[1 mark]

_____

_____

9 (d) (iv) State the name of the process which causes the potential difference to be produced in this investigation.

[1 mark]

_____

9 (e) A transformer has been developed that can be used with many different devices.

Suggest **one** advantage of having a transformer that can be used with many different devices.

[1 mark]

_____

_____

11

4.2.1.3 Current, resistance and potential difference

Question 45

June 2017 | PH2FP | Original Q1 | Legacy

1 (a) A student rubs a rubber balloon against the sleeve of her woollen jumper. The balloon becomes negatively charged.

1 (a) (i) Use the correct answer from the box to complete the sentence.

[1 mark]

electrons	neutrons	protons

The balloon becomes negatively charged because it gains _____ from the jumper.

1 (a) (ii) After charging the balloon, what is the overall charge left on the jumper?

[1 mark]

Tick (✓) **one** box.

negative ☐

neutral ☐

positive ☐

1 (b) **Figure 1** shows two identically charged balloons hanging close together.

Figure 1

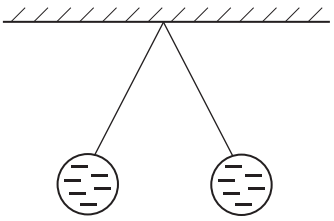

1 (b) (i) Complete the following sentence.

[1 mark]

The balloons carry the same type of charge and so _____ each other.

1 (b) (ii) From **Figure 1**, what can you conclude about the sizes of the **forces** acting on the balloons?

[1 mark]

_____

_____

4.2.1.3 Current, resistance and potential difference

Question 45 · continued

1 (c) A lightning conductor attached to the outside of a building reduces the risk of damage being caused to the building by a lightning strike.

Figure 2

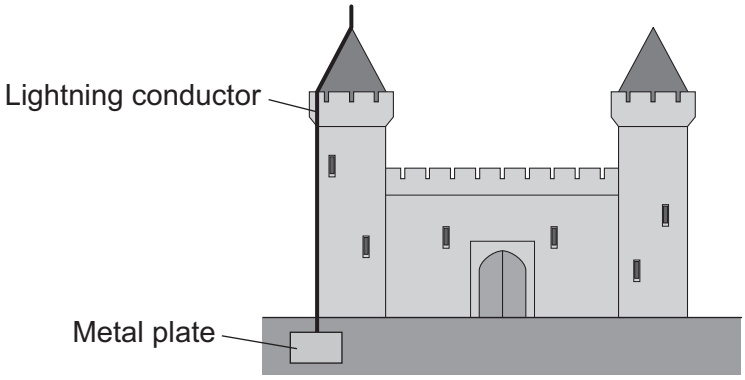

If the building is struck by lightning the electrical charge flows through the lightning conductor to earth.

1 (c) (i) Through which one of the following materials can electrical charge flow easily?

Draw a ring around the correct answer.

[1 mark]

copper **plastic** **rubber**

1 (c) (ii) What happens to the temperature of a lightning conductor when electrical charge flows through it?

[1 mark]

Tick (✓) **one** box.

the temperature decreases ☐

the temperature does not change ☐

the temperature increases ☐

1 (c) (iii) During a lightning strike, 4 coulombs of charge flow through a lightning conductor in 0.002 seconds.

Calculate the current in the lightning conductor.

Use the correct equation from the Physics Equations Sheet.

[2 marks]

_____

_____

Current = _____ A

8

4.2.1.3 Current, resistance and potential difference

Question 46

June 2017 | PH2FP | Original Q3 | Legacy

3 **Figure 4** shows a lamp and an 18 Ω resistor connected in a series circuit.

Figure 4

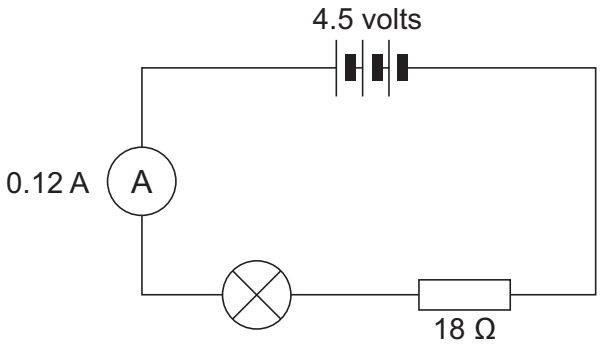

3 (a) (i) Calculate the potential difference (***V***) across the 18 Ω resistor.

Use the correct equation from the Physics Equations Sheet.

[2 marks]

_____

_____

Potential difference (***V***) = _____ volts

3 (a) (ii) How would you calculate the potential difference across the lamp?

[1 mark]

Tick (✓) **one** box.

4.5 – ***V*** ☐

4.5 + ***V*** ☐

$\frac{4.5}{V}$ ☐

4.2.1.3 Current, resistance and potential difference

Question 46 · continued

3 (b) **Figure 5** shows the current-potential difference graphs for three electrical components, **A**, **B** and **C**.

Figure 5

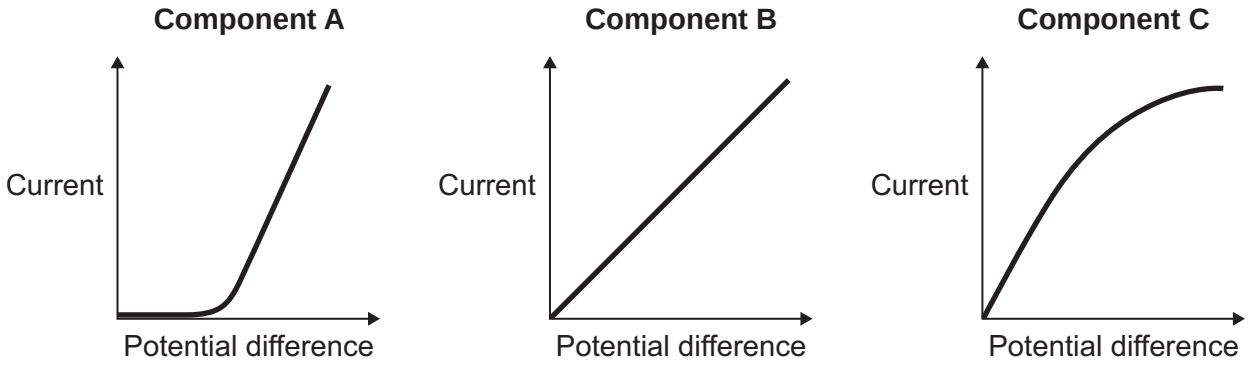

3 (b) (i) Which component, **A**, **B** or **C** is a lamp?

[1 mark]

3 (b) (ii) Which component, **A**, **B** or **C** is a diode?

[1 mark]

5

4.2.1.3 Current, resistance and potential difference

Question 47

June 2017 | PH3FP | Original Q2 | Legacy

2 **Figure 3** shows a traditional transformer.

Figure 3

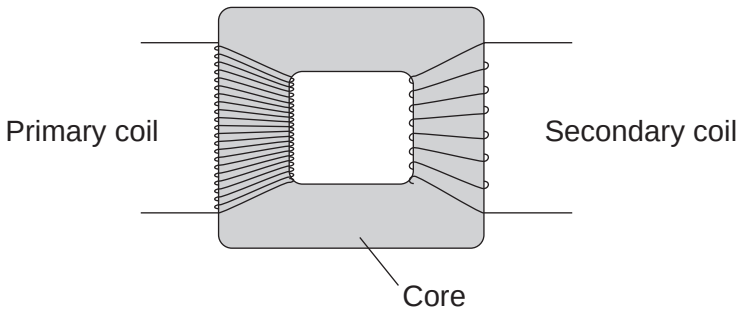

2 (a) (i) Use the correct answer from the box to complete the sentence.

[1 mark]

greater than	**equal to**	**less than**

The potential difference across the secondary coil is _____

the potential difference across the primary coil.

2 (a) (ii) Give a reason for your answer to part **2 (a) (i)**.

[1 mark]

_____

_____

2 (b) What is the core of the transformer made from?

[1 mark]

_____

4.2.1.3 Current, resistance and potential difference

Question 47 · continued

2 (c) What happens as the magnetic field in the core of the transformer changes?

[1 mark]

Tick (✓) **one** box.

The mass of the core increases. ☐

A potential difference is induced across the secondary coil. ☐

The temperature of the core decreases. ☐

2 (d) The power supply to the transformer is connected to the mains electricity supply.

What is the frequency of the mains electricity supply?

[1 mark]

Tick (✓) **one** box.

25 hertz ☐

50 hertz ☐

100 hertz ☐

2 (e) The power input of the transformer is 2 W. The transformer is 100% efficient.

State the power output of the transformer.

[1 mark]

_____

6

4.2.1.3 Current, resistance and potential difference

Question 48

June 2018 | 8463/1F | Original Q2

0 2 **Figure 2** shows how the current through a filament lamp changes after the lamp is switched on.

Figure 2

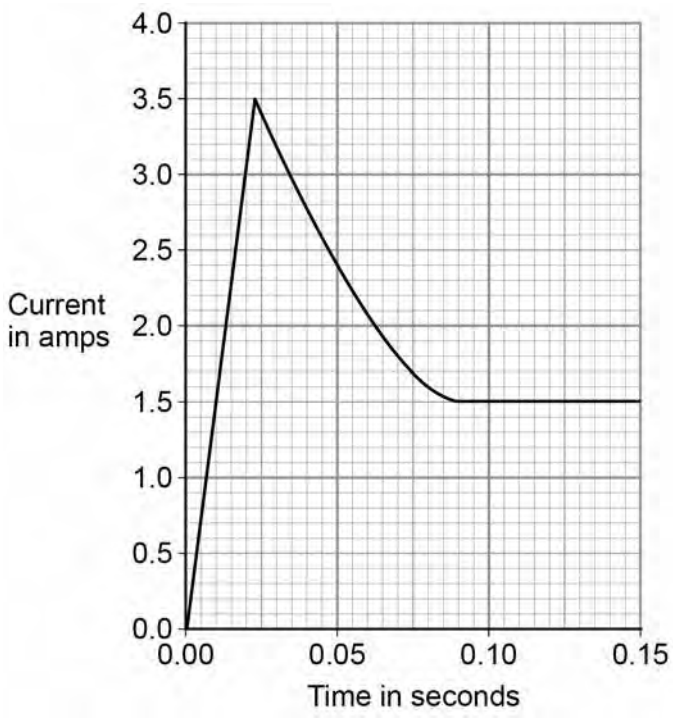

0 2 . 1 The normal current through the filament lamp is 1.5 A.

For how many seconds is the current through the filament lamp greater than 1.5 A?

Tick **one** box.

[1 mark]

- 0.01 s ☐
- 0.08 s ☐
- 0.09 s ☐
- 0.14 s ☐

4.2.1.3 Current, resistance and potential difference

Question 48 · continued

0 2 . 2 Why might the filament inside a lamp melt when the lamp is first switched on?

[1 mark]

0 2 . 3 The lamp is connected to a 24 V power supply. The current through the lamp is 1.5 A.

Calculate the power of the lamp.

Use the equation:

power = potential difference × current

[2 marks]

Power = _____ W

0 2 . 4 LED lamps are much more efficient than filament lamps.

What does this statement mean?

Tick **one** box.

[1 mark]

- LED lamps have a similar power output to filament lamps. ☐
- LED lamps waste a smaller proportion of the input energy than filament lamps. ☐
- LED lamps have a higher power input than filament lamps. ☐
- LED lamps waste a larger proportion of the input energy than filament lamps. ☐

5

4.2.1.3 Current, resistance and potential difference

Question 49

June 2018 | 8463/1F | Original Q3

0 3 . 1 Draw a diagram to show how 1.5 V cells should be connected together to give a potential difference of 4.5 V.

Use the correct circuit symbol for a cell.

[2 marks]

A student built the circuit shown in **Figure 3**.

Figure 3

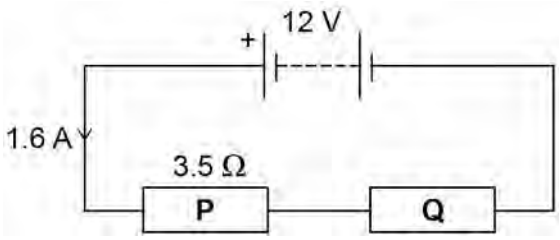

0 3 . 2 Calculate the total resistance of the circuit in **Figure 3**.

Use the equation:

$$\text{resistance} = \frac{\text{potential difference}}{\text{current}}$$

[2 marks]

Total resistance = _____ Ω

4.2.1.3 Current, resistance and potential difference

Question 49 · continued

0 3 . 3 The resistance of **P** is 3.5 Ω.

Calculate the resistance of **Q**.

[1 mark]

Resistance of **Q** = _____ Ω

0 3 . 4 The student connects the two resistors in **Figure 3** in parallel.

What happens to the total resistance of the circuit?

Tick **one** box.

[1 mark]

- It decreases ☐
- It increases ☐
- It does not change ☐

Give a reason for your answer.

[1 mark]

7

4.2.1.3 Current, resistance and potential difference

Question 50

June 2018 | 8463/1F | Original Q7

0 7 The plug of an electrical appliance contains a fuse.

0 7 . 1 What is the correct circuit symbol for a fuse?

Tick **one** box.

[1 mark]

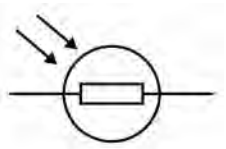
☐

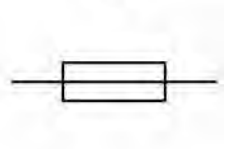
☐

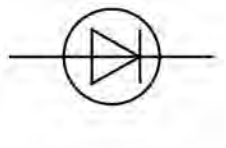
☐

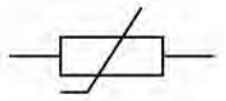
☐

0 7 . 2 The appliance is connected to the mains electrical supply. The mains potential difference is 230 V.

Calculate the energy transferred when 13 C of charge flows through the appliance.

Use the equation:

energy transferred = charge flow × potential difference

[2 marks]

Energy transferred = _____ J

4.2.1.3 Current, resistance and potential difference

Question 50 · continued

Figure 9 shows the structure of a fuse.

Figure 9

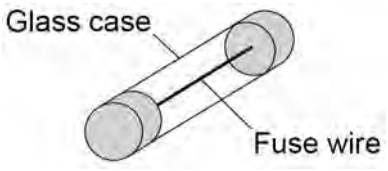

0 7 . 3 Write down the equation that links charge flow, current and time.

[1 mark]

0 7 . 4 The fuse wire melts when 1.52 coulombs of charge flows through the fuse in 0.40 seconds.

Calculate the current at which the fuse wire melts.

[3 marks]

Current = _____ A

0 7 . 5 The mass of the fuse wire is 0.00175 kg. The specific latent heat of fusion of the fuse wire is 205 000 J/kg.

Calculate the energy needed to melt the fuse wire.

Use the Physics Equations Sheet.

[2 marks]

Energy = _____ J

9

4.2.1.3 Current, resistance and potential difference

Question 51

June 2018 | 8463/1F | Original Q12

1 2 A student investigated how the resistance of a piece of nichrome wire varies with length.

Figure 17 shows part of the circuit the student used.

Figure 17

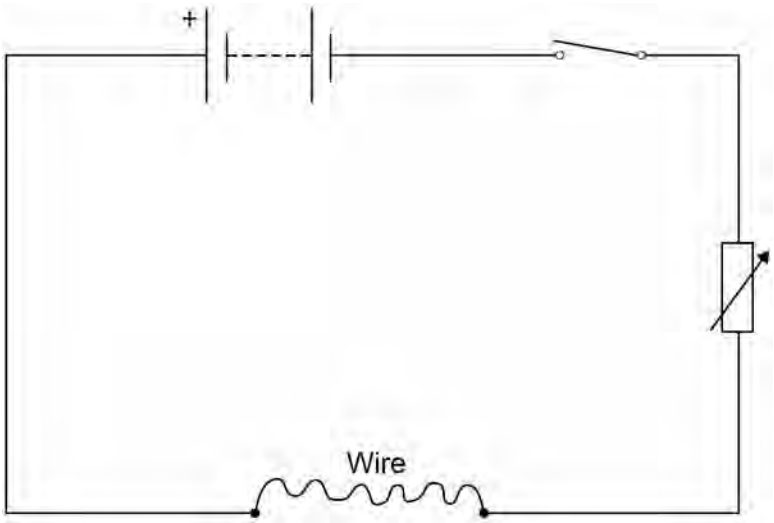

1 2 . 1 Complete **Figure 17** by adding an ammeter and a voltmeter.

Use the correct circuit symbols.

[3 marks]

4.2.1.3 Current, resistance and potential difference

Question 51 · continued

June 2018 | 8463/1F | Original Q12

1 2 . 2 Describe how the student would obtain the data needed for the investigation.

Your answer should include a risk assessment for **one** hazard in the investigation.

[6 marks]

1 2 . 3 Why would switching off the circuit between readings have improved the accuracy of the student's investigation?

Tick **one** box.

[1 mark]

- The charge flow through the wire would not change. ☐
- The potential difference of the battery would not increase. ☐
- The power output of the battery would not increase. ☐
- The temperature of the wire would not change. ☐

Question 51 · continued

1 2 . 4 The student used crocodile clips to make connections to the wire.

They could have used a piece of equipment called a 'jockey'.

Figure 18 shows a crocodile clip and a jockey in contact with a wire.

Figure 18



Crocodile clip

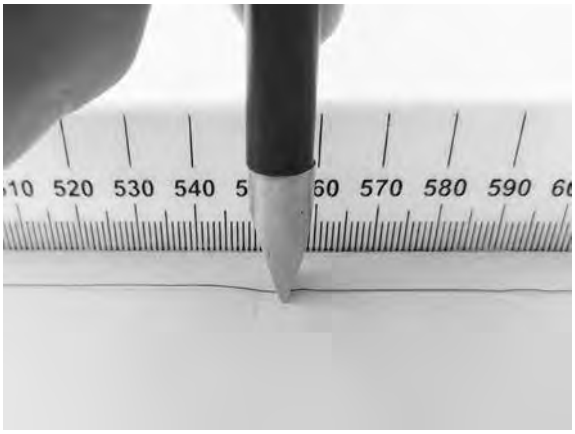

Jockey

How would using the jockey have affected the accuracy and resolution of the student's results compared to using the crocodile clip?

Tick **two** boxes.

[2 marks]

The accuracy of the student's results would be higher. ☐

The accuracy of the student's results would be lower. ☐

The accuracy of the student's results would be the same. ☐

The resolution of the length measurement would be higher. ☐

The resolution of the length measurement would be lower. ☐

The resolution of the length measurement would be the same. ☐

12

4.2.1.3 Current, resistance and potential difference

Question 52

June 2018 | 8463/2F | Original Q4

0 4 **Figure 3** shows two paper clips hanging from a bar magnet.

Figure 3



The paper clips have become magnetised.

0 4 . 1 Label the north and south poles of both paper clips.

[1 mark]

A student investigated how the number of turns of wire on an electromagnet affects the strength of the electromagnet.

Figure 4 shows the equipment used by the student. Throughout the investigation the student kept the current through the wire constant.

Figure 4

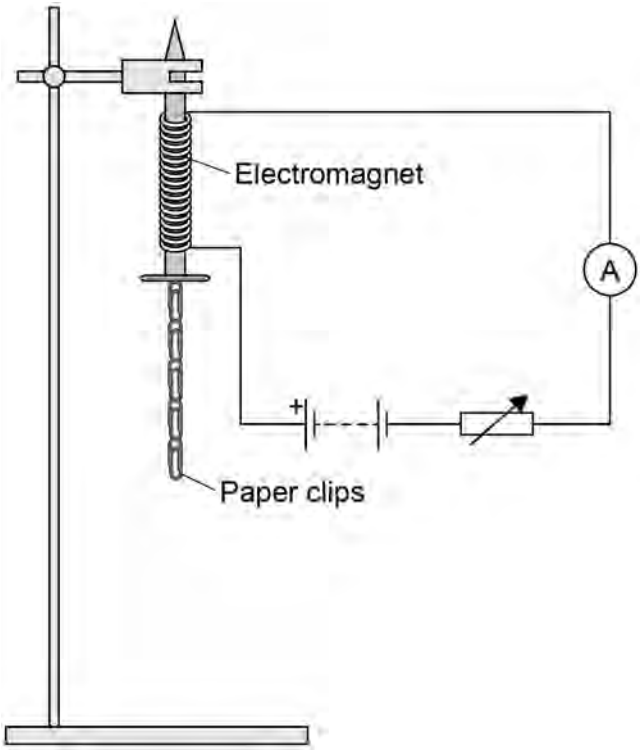

Question 52 · continued

0 4 . 2 The student measured the strength of the electromagnet by counting the number of paper clips the electromagnet could hold.

Explain why it was important that the paper clips were all the same size.

[2 marks]

Table 2 shows the student's results.

Table 2

Number of turns of wire on the electromagnet	Number of paper clips held
10	3
20	6
30	9
40	12

0 4 . 3 Describe the pattern shown in **Table 2**.

[2 marks]

Question 4 continues on the next page

Question 52 · continued

0 4 . 4 The student then used 50 turns of wire on the electromagnet.

The electromagnet picked up 18 paper clips. This was more paper clips than the student had expected.

Which **one** is the most likely cause of this result?

Tick **one** box.

[1 mark]

The paper clips used with 50 turns were larger than the others. ☐

There were less than 50 turns of wire on the electromagnet. ☐

Some of the paper clips were already magnetised. ☐

0 4 . 5 The student repeated the measurement for 50 turns of wire three more times.

This gave her the following set of results.

18 16 14 15

Explain what the student should now do with the **four** results for 50 turns of wire.

[3 marks]

4.2.1.3 Current, resistance and potential difference

Question 52 · continued

0 4 . 6 The student wrote the hypothesis:

'Increasing the current through the wire will make the electromagnet stronger.'

Describe how the student should change the investigation to test this hypothesis.

[3 marks]

12

4.2.1.3 Current, resistance and potential difference

Question 53

June 2019 | 8463/1F | Original Q7

0 7 **Figure 9** shows a circuit diagram.

Figure 9

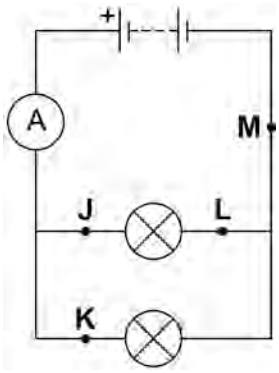

0 7 . 1 In which position could a switch be placed so that both lamps can be switched on or off at the same time?

[1 mark]

Tick (✓) **one** box.

J ☐ **K** ☐ **L** ☐ **M** ☐

0 7 . 2 Draw the circuit symbol for a switch in the box below.

[1 mark]

4.2.1.3 Current, resistance and potential difference

Question 53 · continued

0 7 . 3 In 30 seconds, 24 coulombs of charge flow through the battery.

Calculate the current in the battery.

Use the equation:

$$\text{current} = \frac{\text{charge flow}}{\text{time}}$$

[2 marks]

Current = _____ A

0 7 . 4 There is a potential difference of 3.6 V across the battery.

Calculate the energy transferred by the battery when 60 coulombs of charge flows through the battery.

Use the equation:

energy transferred = charge flow × potential difference

[2 marks]

Energy transferred = _____ J

Question 7 continues on the next page

Question 53 · continued

A student built **Circuit X** and **Circuit Y** shown in **Figure 10**.

The components used in each circuit were identical.

Figure 10

Circuit X

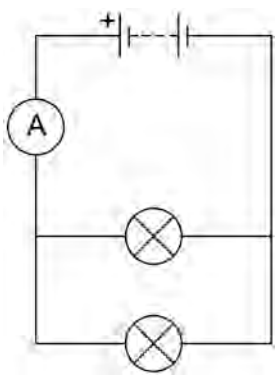

Circuit Y

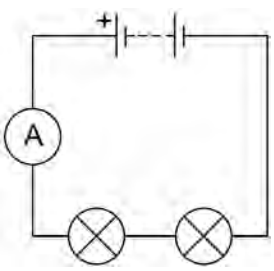

0 7 . 5 How would the reading on the ammeter in **Circuit Y** compare to the reading on the ammeter in **Circuit X**?

[1 mark]

Tick (✓) **one** box.

The reading in **Y** would be higher. ☐

The reading in **Y** would be lower. ☐

The readings would be the same. ☐

0 7 . 6 How does the total resistance of **Circuit Y** compare with the total resistance of **Circuit X**?

[1 mark]

Tick (✓) **one** box.

The total resistance of **Y** is greater. ☐

The total resistance of **Y** is less. ☐

The total resistance is the same. ☐

4.2.1.3 Current, resistance and potential difference

Question 53 · continued

The student built another circuit which is shown in **Figure 11**.

Figure 11

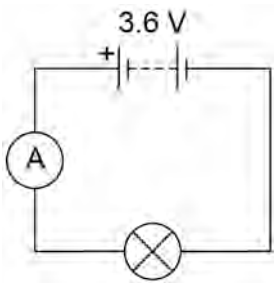

0 7 . 7 Write down the equation which links current, potential difference and resistance.

[1 mark]

0 7 . 8 There is a potential difference of 3.6 V across the lamp in **Figure 11**.

The current through the lamp is 0.80 A

Calculate the resistance of the lamp.

[3 marks]

Resistance = _____ Ω

12

4.2.1.3 Current, resistance and potential difference

Question 54

June 2019 | 8463/1F | Original Q9

0 9 Light bulbs are labelled with a power input.

0 9 . 1 What does power input mean?

[1 mark]

Tick (✓) **one** box.

- The charge transferred each second by the bulb. ☐
- The current through the bulb. ☐
- The energy transferred each second to the bulb. ☐
- The potential difference across the bulb. ☐

0 9 . 2 Write down the equation which links current, potential difference and power.

[1 mark]

_____

0 9 . 3 A light bulb has a power input of 40 W

The mains potential difference is 230 V

Calculate the current in the light bulb.

[3 marks]

_____

_____

_____

Current = _____ A

4.2.1.3 Current, resistance and potential difference

Question 54 · continued

Table 3 shows information about three different light bulbs.

Table 3

Light bulb	Total power input in watts	Useful power output in watts	Efficiency
P	6.0	5.4	0.90
Q	40	2.0	0.05
R	9.0	**X**	0.30

0 9 . 4 Write down the equation which links efficiency, total power input and useful power output.

[1 mark]

0 9 . 5 Calculate the value of **X** in **Table 3**.

[3 marks]

X = _____ W

0 9 . 6 In addition to power input, light bulbs should also be labelled with the rate at which they emit visible light.

Suggest why.

[2 marks]

1

4.2.1.3 Current, resistance and potential difference

Question 55

November 2020 | 8463/1F | Original Q3

0 3 **Figure 5** shows part of a lighting circuit in a house.

Figure 5

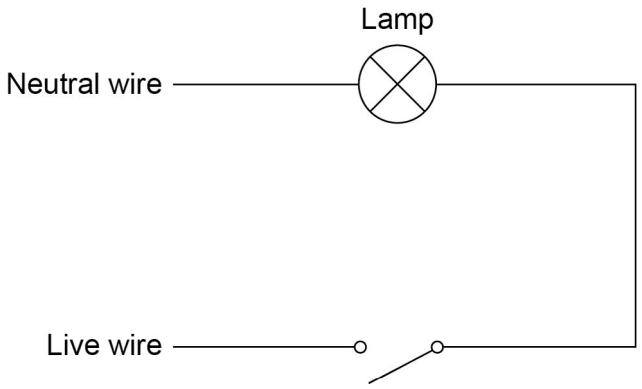

0 3 . 1 What is the frequency of the ac mains electricity supply in the UK?

[1 mark]

Tick (✓) **one** box.

20 Hz ☐ 50 Hz ☐ 60 Hz ☐ 100 Hz ☐

0 3 . 2 The mains electricity supply has an alternating potential difference.

Which diagram shows an alternating potential difference?

[1 mark]

Tick (✓) **one** box.

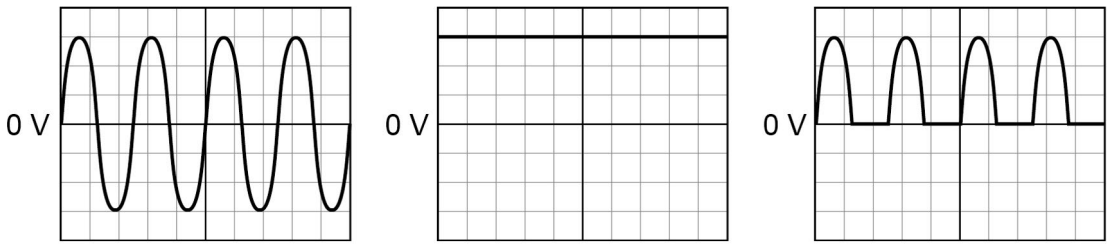

☐ ☐ ☐

4.2.1.3 Current, resistance and potential difference

Question 55 · continued

0 3 . 3 The potential difference across the lamp is 230 V.

The current in the lamp is 0.020 A.

Calculate the power output of the lamp.

Use the equation:

power = potential difference × current

[2 marks]

Power = _____ W

0 3 . 4 The potential difference across the lamp is 230 V.

Calculate the energy transferred by the lamp when 180 C of charge flows through the lamp.

Use the equation:

energy transferred = charge flow × potential difference

[2 marks]

Energy transferred = _____ J

0 3 . 5 An electrician needs to replace the light switch in **Figure 5**.

Describe the possible hazard and the risk to the electrician of changing the light switch.

[2 marks]

Hazard _____

Risk _____

8

4.2.1.3 Current, resistance and potential difference

Question 56

November 2020 | 8463/1F | Original Q4

0 4 A student investigated how the total resistance of identical resistors connected in series varied with the number of resistors.

The student used an ohmmeter to measure the total resistance of the resistors.

Figure 6 shows the student's circuit with 3 resistors.

Figure 6

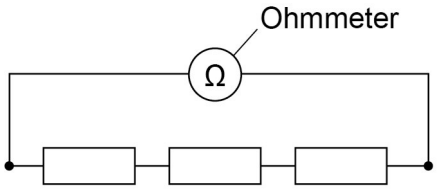

The student repeated each reading of resistance three times.

Table 1 shows the student's results for 3 resistors in series.

Table 1

Number of resistors	Total resistance in Ω			
	Reading 1	Reading 2	Reading 3	Mean
3	35.9	36.0	36.1	36.0

0 4 . 1 Calculate the mean resistance of 1 resistor.

[2 marks]

Resistance = _____ Ω

0 4 . 2 What was the resolution of the ohmmeter the student used?

Tick (✓) **one** box.

[1 mark]

0.1 Ω ☐ 0.2 Ω ☐ 1.1 Ω ☐ 36.0 Ω ☐

4.2.1.3 Current, resistance and potential difference

Question 56 · continued

0 4 . 3 How do the results show that the student's measurements were precise?

[1 mark]

Tick (✓) **one** box.

The measurements are accurate. ☐

The measurements are grouped closely together. ☐

The measurements are reproducible. ☐

Question 4 continues on the next page

4.2.1.3 Current, resistance and potential difference

Question 56 · continued

Figure 7 shows the results.

Figure 7

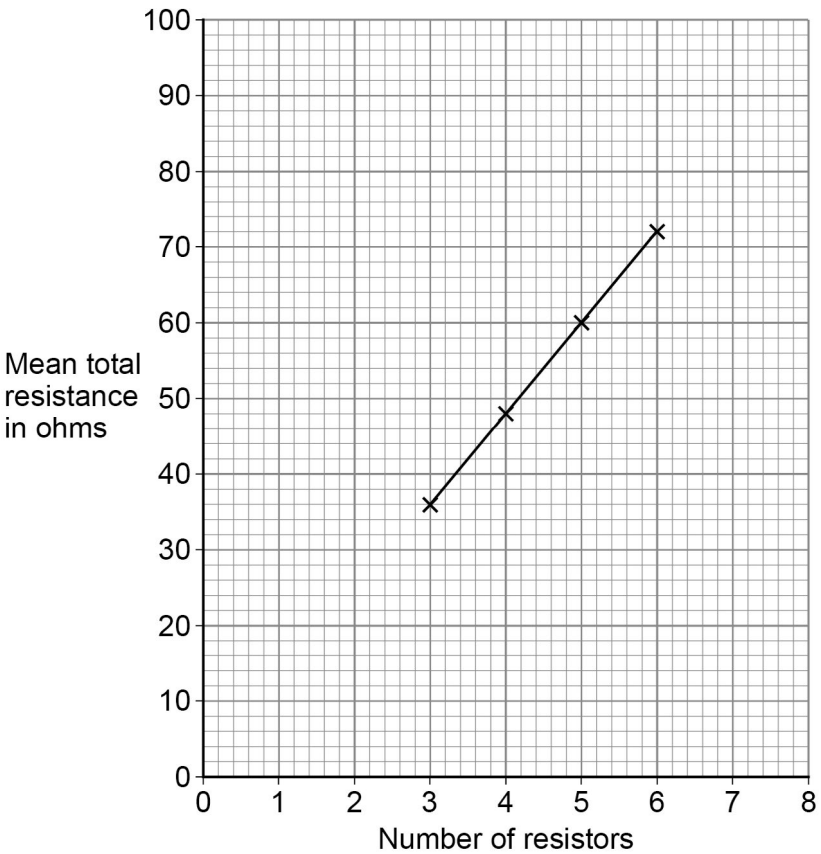

0 4 . 4 How do the results show that the total resistance is directly proportional to the number of resistors?

[1 mark]

Tick (✓) **one** box.

The results give a line with a positive gradient. ☐

The results give a straight line that would go through the origin. ☐

The results show a linear relationship. ☐

4.2.1.3 Current, resistance and potential difference

Question 56 · continued

0 4 . 5 Predict the mean total resistance of 7 resistors.

Use **Figure 7**.

[1 mark]

Mean total resistance of 7 resistors = _____ Ω

0 4 . 6 Some resistors are connected in series with a battery.

When more resistors are added in series, the total resistance increases.

Complete the sentences.

Choose answers from the box.

Each answer may be used once, more than once or not at all.

[2 marks]

decreases	**increases**	**remains the same**

When the number of resistors increases, the potential difference across each resistor _____ .

When the number of resistors increases, the current in the circuit _____ .

8

4.2.1.3 Current, resistance and potential difference

Question 57

November 2020 | 8463/1F | Original Q7

0 7 A student heated water in an electric kettle.

0 7 . 1 Water has a high specific heat capacity.

Complete the sentence.

Choose answers from the box.

[2 marks]

°C	**J**	**kg**	**s**	**W**

The specific heat capacity of a substance is the energy needed to raise the

temperature of 1 _____ of the substance by 1 _____.

0 7 . 2 The kettle circuit contains a thermistor which is used to switch the kettle off when the water reaches 100 °C.

What is the correct symbol for a thermistor?

[1 mark]

Tick (✓) **one** box.

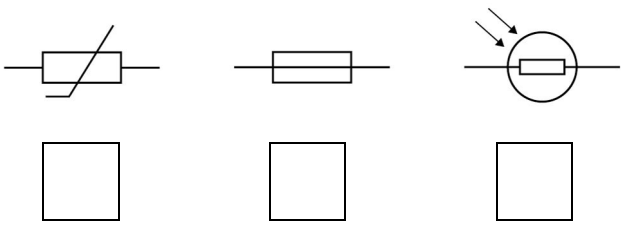

4.2.1.3 Current, resistance and potential difference

Question 57 · continued

0 7 . 3 The resistance of the heating element in the kettle is 15 Ω.

The current in the heating element is 12 A.

Calculate the power of the heating element.

Use the equation:

$$\text{power} = (\text{current})^2 \times \text{resistance}$$

[2 marks]

Power = _____ W

Question 7 continues on the next page

Question 57 · continued

The student investigated how quickly the kettle could increase the temperature of 0.50 kg of water.

Figure 10 shows the results of the investigation.

Figure 10

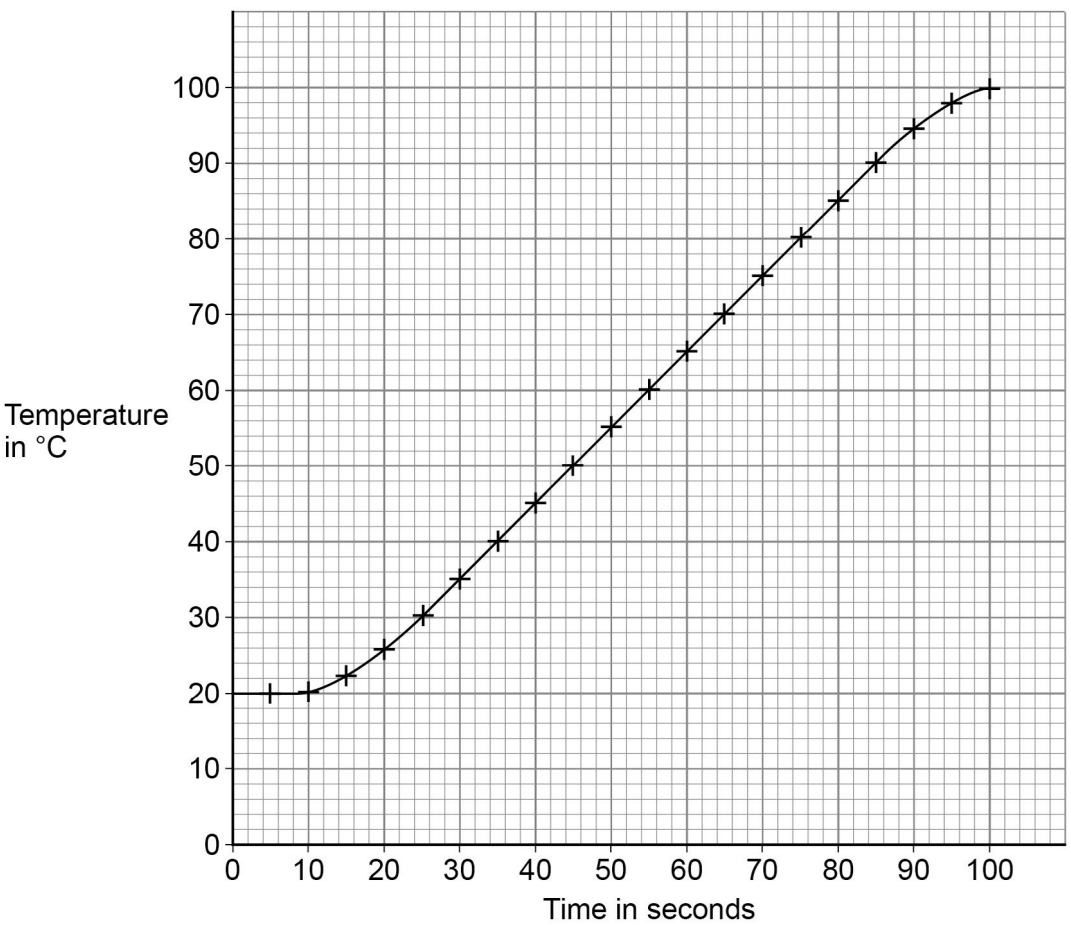

4.2.1.3 Current, resistance and potential difference

Question 57 · continued

0 7 . 4 The temperature of the water did **not** start to increase until 10 seconds after the kettle was switched on.

What is the reason for this?

[1 mark]

Tick (✓) **one** box.

- Energy is transferred from the surroundings to the kettle. ☐
- The charge flows slowly through the kettle circuit. ☐
- The heating element in the kettle takes time to heat up. ☐
- The power output of the kettle increases slowly. ☐

0 7 . 5 Describe a method the student could have used to obtain the results shown in **Figure 10**.

[6 marks]

Question 7 continues on the next page

Question 57 · continued

0 7 . 6 The mass of water in the kettle was 0.50 kg.

The temperature of the water increased from 20 °C to 100 °C.

specific heat capacity of water = 4200 J/kg °C

Calculate the energy transferred to the water.

Use the Physics Equations Sheet.

[3 marks]

Energy = _____ J

0 7 . 7 The water in the kettle boiled for a short time before the kettle switched off.

During this time 5.0 g of water changed to steam.

specific latent heat of vaporisation of water = 2 260 000 J/kg

Calculate the energy transferred to change the water to steam.

Use the Physics Equations Sheet.

[3 marks]

Energy = _____ J

18

4.2.1.3 Current, resistance and potential difference

Question 58

November 2020 | 8463/1F | Original Q8

0 8 A student investigated how the current in a filament lamp varied with the potential difference across the filament lamp.

Figure 11 shows part of the circuit used.

Figure 11

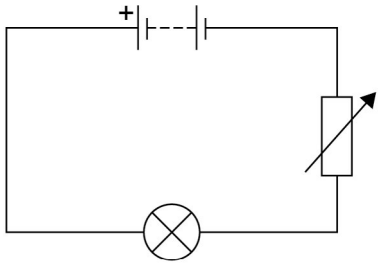

0 8 . 1 Complete **Figure 11** by adding an ammeter and a voltmeter.

Use the correct circuit symbols.

[3 marks]

Question 8 continues on the next page

4.2.1.3 Current, resistance and potential difference

Question 58 · continued

Figure 12 shows some of the results.

Figure 12

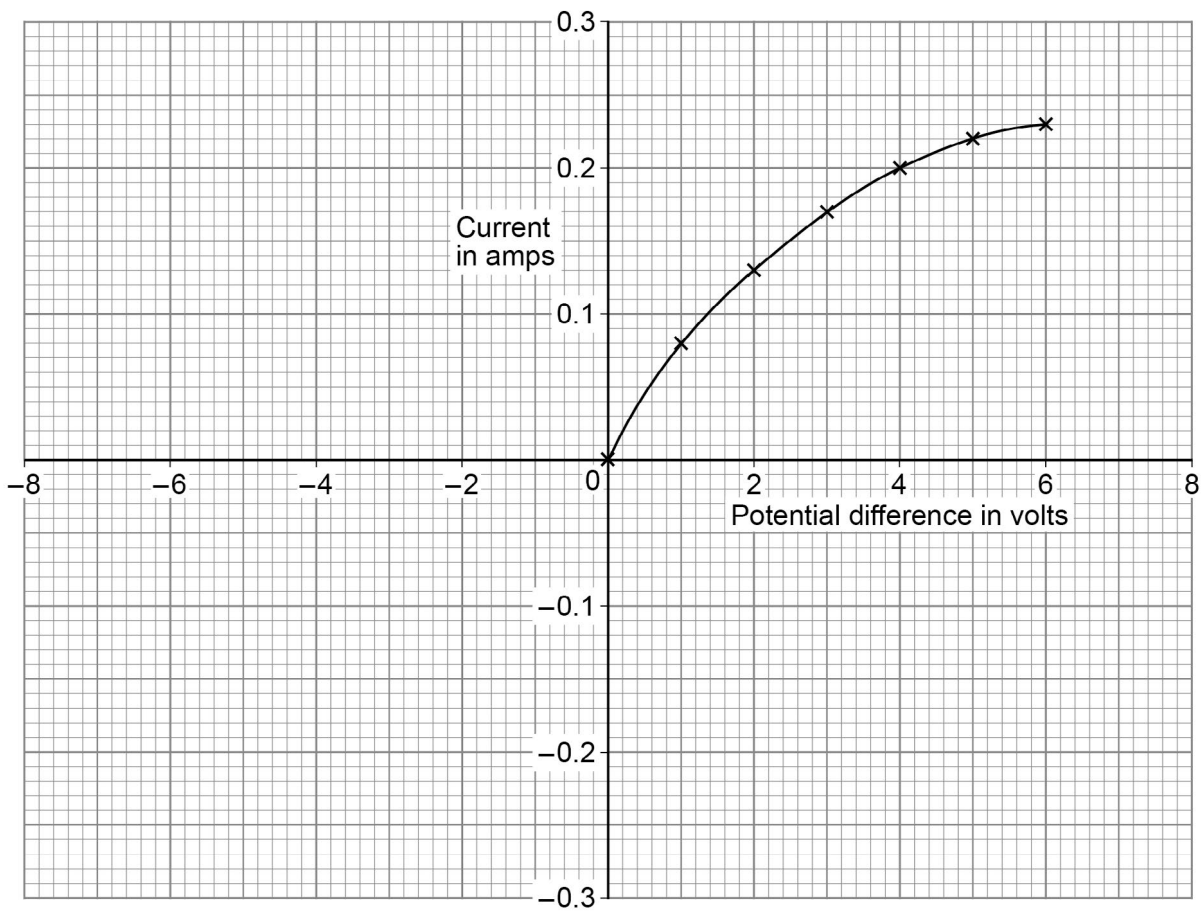

0 8 . 2 The student reversed the connections to the power supply and obtained negative values for the current and potential difference.

Draw a line on **Figure 12** to show the relationship between the negative values of current and potential difference.

[2 marks]

4.2.1.3 Current, resistance and potential difference

Question 58 · continued

November 2020 | 8463/1F | Original Q8

0 8 . 3 Write down the equation which links current (I), potential difference (V) and resistance (R).

[1 mark]

0 8 . 4 Determine the resistance of the filament lamp when the potential difference across it is 1.0 V.

Use data from **Figure 12**.

[4 marks]

Resistance = _____ Ω

0 8 . 5 A second student did the same investigation. The ammeter used had a zero error.

What is meant by a zero error?

[1 mark]

11

4.2.1.3 Current, resistance and potential difference

Question 59

November 2021 | 8463/1F | Original Q2

0 2 **Figure 2** shows part of the National Grid linking a power station to consumers.

Figure 2

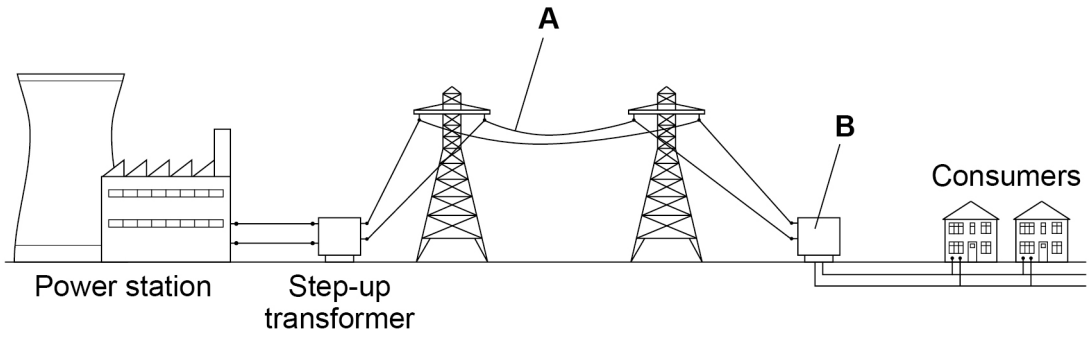

0 2 . 1 Name the parts of **Figure 2** labelled **A** and **B**.

[2 marks]

A _____

B _____

0 2 . 2 Electricity is transmitted through **A** at a very high potential difference.

What is the advantage of transmitting electricity at a very high potential difference?

[1 mark]

Tick (✓) **one** box.

A high potential difference is safer for consumers. ☐

Less thermal energy is transferred to the surroundings. ☐

Power transmission is faster. ☐

4.2.1.3 Current, resistance and potential difference

Question 59 · continued

0 2 . 3 The power station generates electricity at a potential difference of 25 000 V.

The energy transferred by the power station in one second is 500 000 000 J.

Calculate the charge flow from the power station in one second.

Use the equation:

$$\text{charge flow} = \frac{\text{energy}}{\text{potential difference}}$$

[2 marks]

Charge flow in one second = _____ C

Question 2 continues on the next page

Question 59 · continued

The electricity supply to a house has a potential difference of 230 V.

Table 1 shows the current in some appliances in the house.

Table 1

Appliance	Current in amps
Dishwasher	6.50
DVD player	0.10
Lamp	0.40
TV	0.20

0 2 . 4 Calculate the total power of all the appliances in **Table 1**.

Use the equation:

power = potential difference × current

[3 marks]

Total power = _____ W

4.2.1.3 Current, resistance and potential difference

Question 59 · continued

0 2 . 5 Each appliance in **Table 1** is switched on for 2 hours.

Which appliance will transfer the most energy?

Give a reason for your answer.

[2 marks]

Appliance _____

Reason _____

_____

_____

0 2 . 6 The average energy transferred from the National Grid every second for each person in the UK is 600 J.

There are 32 000 000 seconds in one year.

Calculate the average energy transferred each year from the National Grid for each person in the UK.

[2 marks]

_____

_____

_____

Average energy transferred = _____ J

12

4.2.1.3 Current, resistance and potential difference

Question 60

November 2021 | 8463/1F | Original Q4

0 4 A student investigated how the current in a circuit varied with the number of lamps connected in parallel in the circuit.

Figure 4 shows the circuit with three identical lamps connected in parallel.

Figure 4

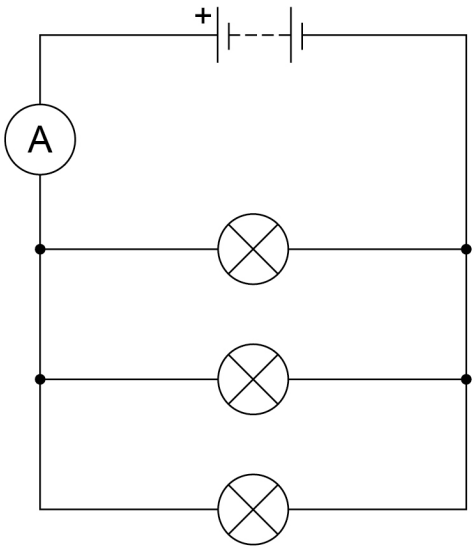

Figure 5 shows the results.

Figure 5

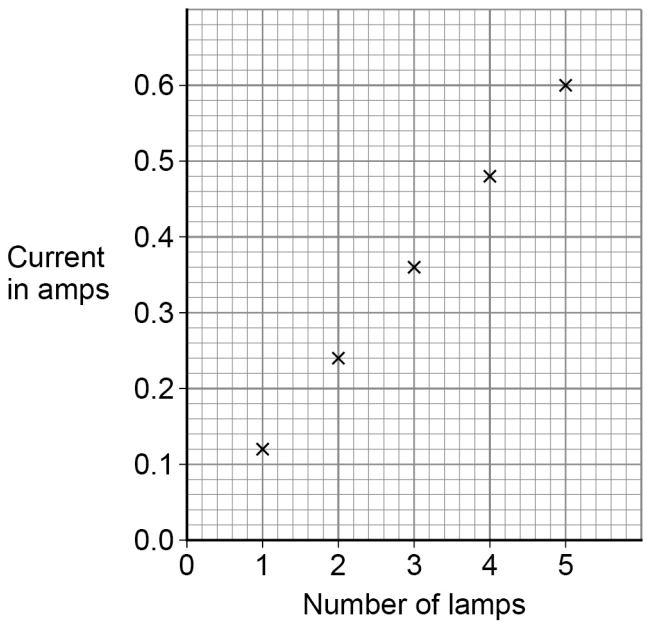

Question 60 · continued

0 4 . 1 Complete the sentences.

Choose answers from the box.

Each answer can be used once, more than once or not at all.

decreased	stayed the same	increased

[3 marks]

As the number of lamps increased, the current _____.

As the number of lamps increased, the total resistance of the circuit _____.

As the number of lamps increased, the potential difference across the battery _____.

0 4 . 2 When there were three lamps in the circuit the ammeter reading kept changing between 0.35 A and 0.36 A.

What type of error would this lead to?

[1 mark]

Tick (✓) **one** box.

- Random error ☐
- Systematic error ☐
- Zero error ☐

Question 4 continues on the next page

4.2.1.3 Current, resistance and potential difference

Question 60 · continued

Figure 6 shows a circuit with five ammeters and three identical lamps.

Figure 6

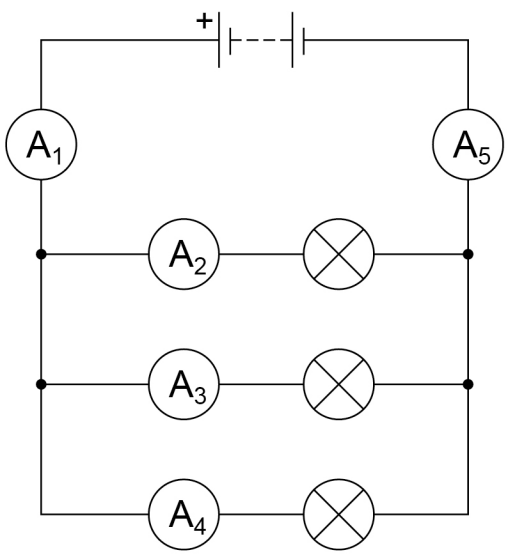

0 4 . 3 Complete **Table 2** to show the readings on ammeters A_2 and A_5.

[2 marks]

Table 2

Ammeter	**A_1**	**A_2**	**A_3**	**A_4**	**A_5**
Current in amps	0.36		0.12	0.12	

4.2.1.3 Current, resistance and potential difference

Question 60 · continued

0 4 . 4 The resistance of one lamp is 15 Ω.

The current in the lamp is 0.12 A.

Calculate the power output of the lamp.

Use the equation:

$$\text{power} = (\text{current})^2 \times \text{resistance}$$

[2 marks]

Power = _____ W

8

Turn over for the next question

4.2.1.3 Current, resistance and potential difference

Question 61

November 2021 | 8463/1F | Original Q9

0 9 **Figure 13** shows an electric car being recharged.

Figure 13

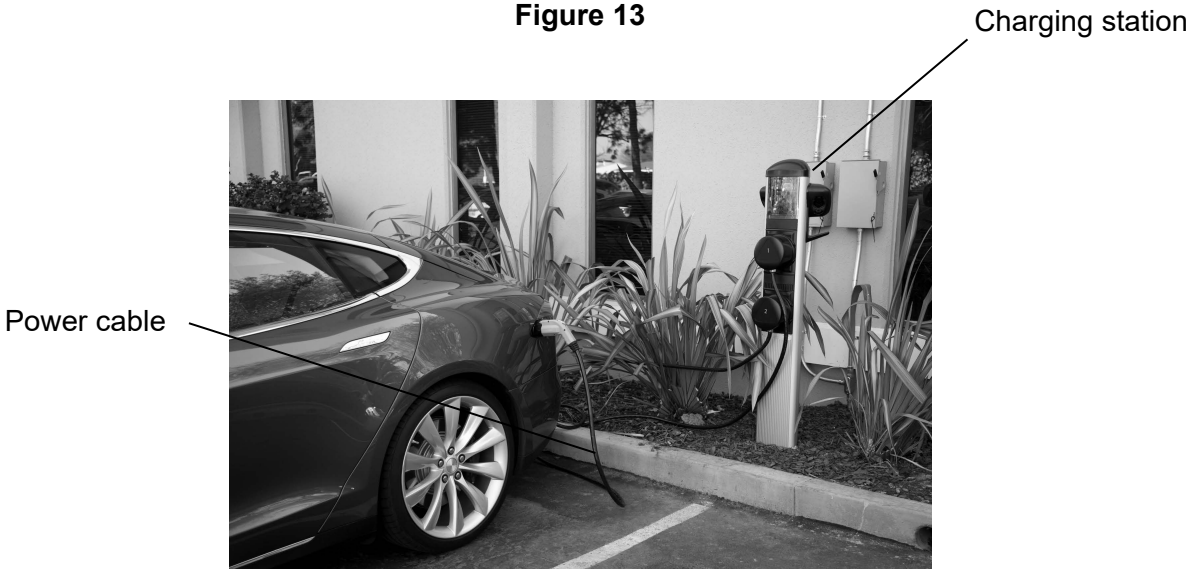

0 9 . 1 The charging station applies a direct potential difference across the battery of the car.

What does 'direct potential difference' mean?

[1 mark]

Question 9 continues on the next page

Question 61 · continued

0 9 . 2 Which equation links energy transferred (E), power (P) and time (t)?

[1 mark]

Tick (✓) **one** box.

energy transferred = $\frac{\text{power}}{\text{time}}$ ☐

energy transferred = $\frac{\text{time}}{\text{power}}$ ☐

energy transferred = power × time ☐

energy transferred = power^2 × time ☐

0 9 . 3 The battery in the electric car can store 162 000 000 J of energy.

The charging station has a power output of 7200 W.

Calculate the time taken to fully recharge the battery from zero.

[3 marks]

Time taken = _____ s

4.2.1.3 Current, resistance and potential difference

Question 61 · continued

0 9 . 4 Which equation links current (I), potential difference (V) and resistance (R)?

[1 mark]

Tick (✓) **one** box.

$I = V \times R$ ☐

$I = V^2 \times R$ ☐

$R = I \times V$ ☐

$V = I \times R$ ☐

0 9 . 5 The potential difference across the battery is 480 V.

There is a current of 15 A in the circuit connecting the battery to the motor of the electric car.

Calculate the resistance of the motor.

[3 marks]

Resistance = _____ Ω

Question 9 continues on the next page

4.2.1.3 Current, resistance and potential difference

Question 61 · continued

0 9 . 6 Different charging systems use different electrical currents.

- Charging system **A** has a current of 13 A.
- Charging system **B** has a current of 26 A.
- The potential difference of both charging systems is 230 V.

How does the time taken to recharge a battery using charging system **A** compare with the time taken using charging system **B**?

[1 mark]

Tick (✓) **one** box.

Time taken using system **A** is half the time of system **B** ☐

Time taken using system **A** is the same as system **B** ☐

Time taken using system **A** is double the time of system **B** ☐

10

4.2.1.3 Current, resistance and potential difference

Question 62

November 2021 | 8463/1F | Original Q11

1 1 Student **A** investigated how the current in resistor **R** at constant temperature varied with the potential difference across the resistor.

Student **A** recorded both positive and negative values of current.

Figure 14 shows the circuit Student **A** used.

Figure 14

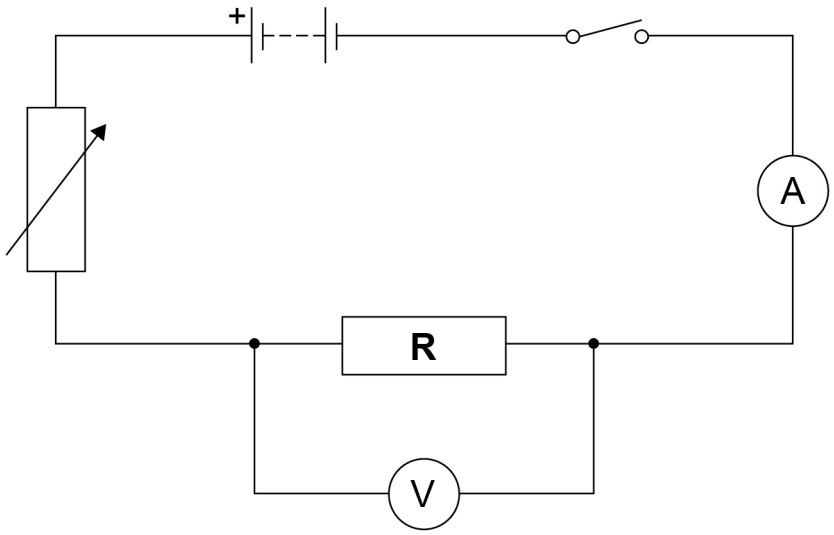

1 1 . 1 Describe a method that Student **A** could use for this investigation.

[6 marks]

4.2.1.3 Current, resistance and potential difference

Question 62 · continued

11.2 Student **B** repeated the investigation.

During Student **B**'s investigation the temperature of resistor **R** increased.

Explain how the increased temperature of resistor **R** would have affected Student **B**'s results.

[2 marks]

Question 11 continues on the next page

4.2.1.3 Current, resistance and potential difference

Question 62 · continued

Figure 15 shows the scale on a moving coil ammeter at one time in the investigation.

Figure 15

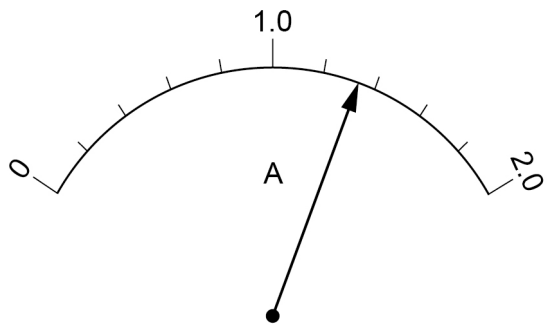

1 1 . 3 What is the resolution of the moving coil ammeter?

[1 mark]

Resolution = _____ A

4.2.1.3 Current, resistance and potential difference

Question 62 · continued

1 1 . 4 Student **B** replaced the moving coil ammeter with a digital ammeter.

Figure 16 shows the reading on the digital ammeter.

Figure 16

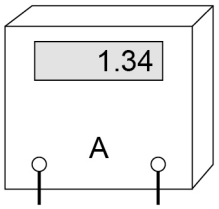

The digital ammeter has a higher resolution than the moving coil ammeter.

Give **one** other reason why it would have been better to use the digital ammeter throughout this investigation.

[1 mark]

10

4.2.1.3 Current, resistance and potential difference

Question 63

June 2022 | 8463/1F | Original Q7

0 7 **Figure 8** shows how electricity is supplied to consumers.

Figure 8

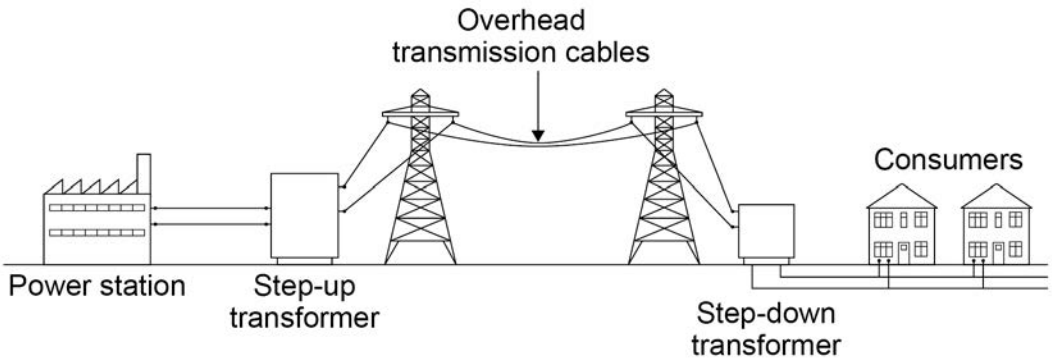

0 7 . 1 Electricity from the power station can be generated using renewable or non-renewable energy resources.

Complete **Table 2** to show which energy resources are renewable and which are non-renewable.

[2 marks]

Tick (✓) **one** box in **each** row.

Table 2

Energy resource	Renewable	Non-renewable
biofuel		
coal		
nuclear		
tides		

Question 7 continues on the next page

4.2.1.3 Current, resistance and potential difference

Question 63 · continued

0 7 . 2 Transformers are used to make power transmission an efficient process.

Complete the sentences.

Choose answers from the box.

Each answer may be used once, more than once or not at all.

[4 marks]

charge	**current**	**energy**
potential difference	**resistance**	

The step-up transformer increases the _____ and decreases the _____ .

Using the transformers decreases the _____ transfer from the overhead transmission cables to the surroundings.

The step-down transformer decreases the _____ .

4.2.1.3 Current, resistance and potential difference

Question 63 · continued

Use the Physics Equations Sheet to answer questions **07.3** and **07.4**.

0 7 . 3 Write down the equation which links charge flow (Q), current (I) and time (t).

[1 mark]

0 7 . 4 The town of Hornsdale in Australia has electricity supplied by a huge battery.

The battery supplies a current of 130 000 A.

Calculate the charge flow from the battery in 5 minutes.

Choose the unit from the box.

[4 marks]

coulombs	newtons	watts

Charge flow = _____ Unit _____

11

4.2.1.3 Current, resistance and potential difference

Question 64

June 2022 | 8463/1F | Original Q11

1 1 An engineering company has invented pavement tiles that generate electricity as people walk on them.

Figure 15 shows someone walking on the pavement tiles.

Figure 15



Use the Physics Equations Sheet to answer questions **11.1** and **11.2**.

1 1 . 1 What equation links current (I), potential difference (V) and power (P)?

[1 mark]

Tick (✓) **one** box.

$P = \frac{V}{I}$ ☐

$P = V \times I$ ☐

$I = P \times V$ ☐

$V = I^2 \times P$ ☐

4.2.1.3 Current, resistance and potential difference

Question 64 · continued

1 1 . 2 When a person walks on a tile, a potential difference of 40 V is induced across the tile.

The power output of the tile is 4.4 W.

Calculate the current in the tile.

[3 marks]

Current = _____ A

Question 11 continues on the next page

Question 64 · continued

Use the Physics Equations Sheet to answer questions **11.3** and **11.4**.

11.3 What equation links efficiency, total power input and useful power output?

[1 mark]

Tick (✓) **one** box.

Efficiency = $\frac{\text{useful power output}}{\text{total power input}}$ ☐

Efficiency = $\frac{\text{total power input}}{\text{useful power output}}$ ☐

Efficiency = useful power output × total power input ☐

11.4 The tiles are used to power LED lights in the pavement.

An LED light has a total power input of 4.0 W.

The efficiency of the LED light is 0.85

Calculate the useful power output of the LED light.

[3 marks]

Useful power output = _____ W

8

4.2.1.3 Current, resistance and potential difference

Question 65

June 2023 | 8463/1F | Original Q1

0 1 A student investigated how the current in a filament lamp varies with the potential difference across the lamp.

Figure 1 shows the circuit used.

Figure 1

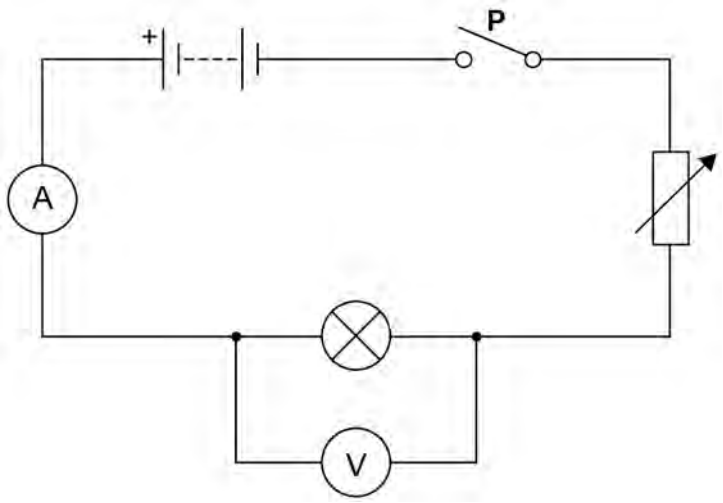

0 1 . 1 What is component **P**?

[1 mark]

_____

0 1 . 2 Complete the sentences.

Choose answers from the box.

[2 marks]

charge	**current**	**energy**	**potential difference**	**power**

The ammeter in the circuit measures _____ .

The voltmeter in the circuit measures _____ .

Question 65 · continued

0 1 . 3 How will **increasing** the resistance of the variable resistor in **Figure 1** affect each of the following quantities?

[3 marks]

Tick (✓) **one** box in **each** row.

Quantity	Decreases	Stays the same	Increases
Current in the circuit			
Potential difference across the lamp			
Total resistance of the circuit			

0 1 . 4 A charge flow of 15 coulombs passed through the filament lamp in a time of 60 seconds.

Calculate the current in the lamp.

Use the equation:

$$\text{current} = \frac{\text{charge flow}}{\text{time}}$$

[2 marks]

Current = _____ A

Question 1 continues on the next page

4.2.1.3 Current, resistance and potential difference

Question 65 · continued

0 1 . 5 When the current in the filament lamp is 0.12 A, the potential difference across the lamp is 6.0 V.

Calculate the resistance of the filament lamp.

Use the equation:

$$\text{resistance} = \frac{\text{potential difference}}{\text{current}}$$

[2 marks]

Resistance = _____ Ω

Question 65 · continued

0 1 . 6 The student repeated the investigation after replacing the lamp with a resistor at constant temperature and then a diode.

The student plotted a graph for each component.

Draw **one** line from each component to its graph.

[2 marks]

Component	Graph
Diode	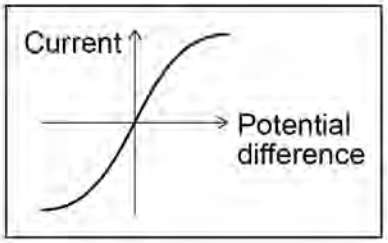
Filament lamp	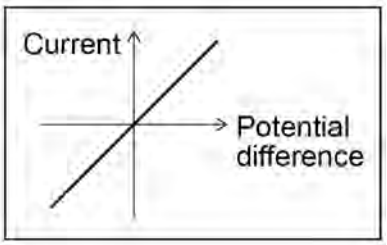
	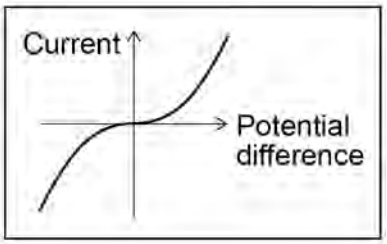
Resistor	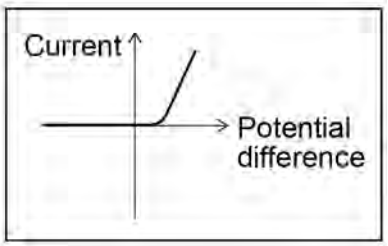

0 1 . 7 **Figure 2** shows an ammeter.

The ammeter is **not** connected to a circuit.

Figure 2



What type of error does the ammeter display?

[1 mark]

Tick (✓) **one** box.

A positive error ☐

A random error ☐

A zero error ☐

13

4.2.1.3 Current, resistance and potential difference

Question 66

June 2023 | 8463/1F | Original Q8

0 8 **Figure 11** shows how the National Grid connects a power station to consumers.

Figure 11

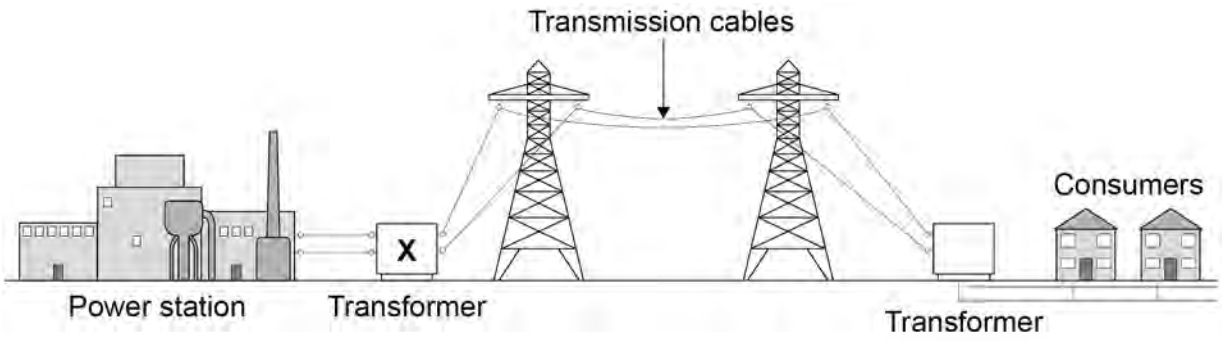

0 8 . 1 Complete the sentences.

[2 marks]

Transformer **X** causes the potential difference to _____ .

Transformer **X** causes the current to _____ .

Use the Physics Equations Sheet to answer questions **08.2** and **08.3**.

0 8 . 2 Which equation links current (I), power (P) and resistance (R)?

[1 mark]

Tick (✓) **one** box.

$P = \frac{I}{R}$ ☐

$P = \frac{I}{R^2}$ ☐

$P = I^2 R$ ☐

$P = IR$ ☐

Question 66 · continued

0 8 . 3 A transmission cable has a power loss of 1.60×10^9 W.

The current in the cable is 2000 A.

Calculate the resistance of the cable.

[3 marks]

Resistance = _____ Ω

Use the Physics Equations Sheet to answer questions **08.4** and **08.5**.

0 8 . 4 Write down the equation which links efficiency, total energy input and useful energy output.

[1 mark]

0 8 . 5 The total energy input to the National Grid from one power station is 34.2 GJ.

The National Grid has an efficiency of 0.992

Calculate the useful energy output from this power station to consumers in GJ.

[3 marks]

Useful energy output = _____ GJ

10

4.2.1.3 Current, resistance and potential difference

Question 67

June 2023 | 8463/1F | Original Q10

1 0 **Figure 14** shows an electrical circuit used to heat the windscreen of a car.

Each resistor in the circuit represents a heating element.

Figure 14

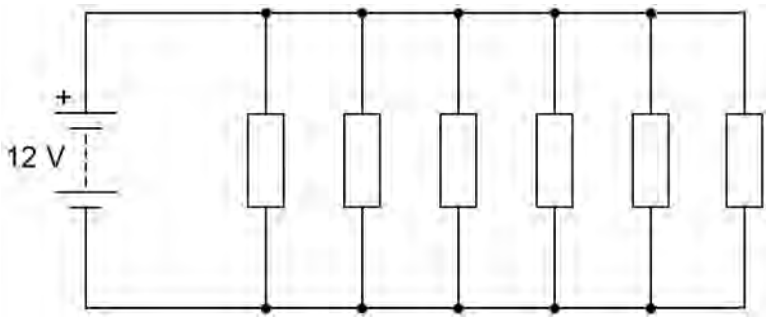

1 0 . 1 The 12 V battery supplies direct potential difference.

What is meant by 'direct potential difference'?

[1 mark]

Use the Physics Equations Sheet to answer questions **10.2** and **10.3**.

1 0 . 2 Which equation links charge flow (Q), energy (E) and potential difference (V)?

[1 mark]

Tick (✓) **one** box.

$E = \frac{V}{Q}$ ☐

$E = QV$ ☐

$E = \frac{Q}{V}$ ☐

$E = \frac{V^2}{Q}$ ☐

4.2.1.3 Current, resistance and potential difference

Question 67 · continued

1 0 . 3 Calculate the charge flow through the 12 V battery when the battery transfers 5010 J of energy.

[3 marks]

Charge flow = _____ C

1 0 . 4 Ice forms on the windscreen at a temperature of 0 °C.

The electrical circuit transfers 5010 J of energy to the ice.

A mass of 0.015 kg of ice melts.

Calculate the specific latent heat of fusion of water.

Use the Physics Equations Sheet.

[3 marks]

Specific latent heat of fusion of water = _____ J/kg

4.2.1.3 Current, resistance and potential difference

Question 67 · continued

10.5 The electrical circuit was left switched on while the ice changed from a solid to a liquid and increased in temperature to 5 °C.

Explain the changes in the arrangement **and** movement of the particles as the ice melted and the temperature increased to 5 °C.

[6 marks]

14

4.2.1.3 Current, resistance and potential difference

Question 68

June 2024 | 8463/1F | Original Q1

0 1 **Figure 1** shows a static electricity generator.

Figure 1

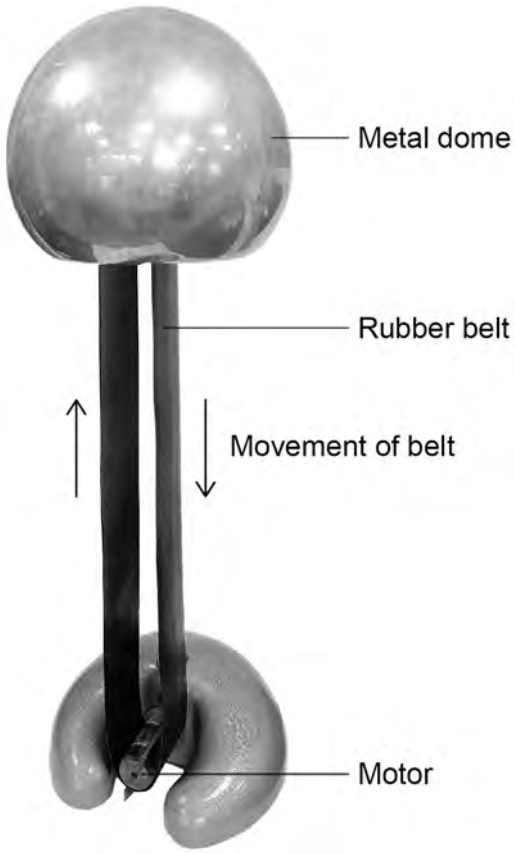

The rubber belt is turned by a motor.

As the rubber belt moves, charge is transferred from the rubber belt to the metal dome.

Question 68 · continued

Figure 2 shows a student touching the metal dome of the static electricity generator.

The dome is negatively charged.

Figure 2



0 1 . 1 Complete the sentence.

Choose the answer from the box.

[1 mark]

negative	**neutral**	**positive**

When the student touches the negatively charged metal dome the student's hair gains a _____ charge.

Question 1 continues on the next page

Question 68 · continued

0 1 . 2 Complete the sentence.

Choose the answer from the box.

[1 mark]

attraction	**gravity**	**repulsion**

The hair on the student's head stands up because the strands of hair experience forces of _____.

0 1 . 3 Which of the following diagrams shows the electric field pattern around the negatively charged metal dome?

[1 mark]

Tick (✓) **one** box.

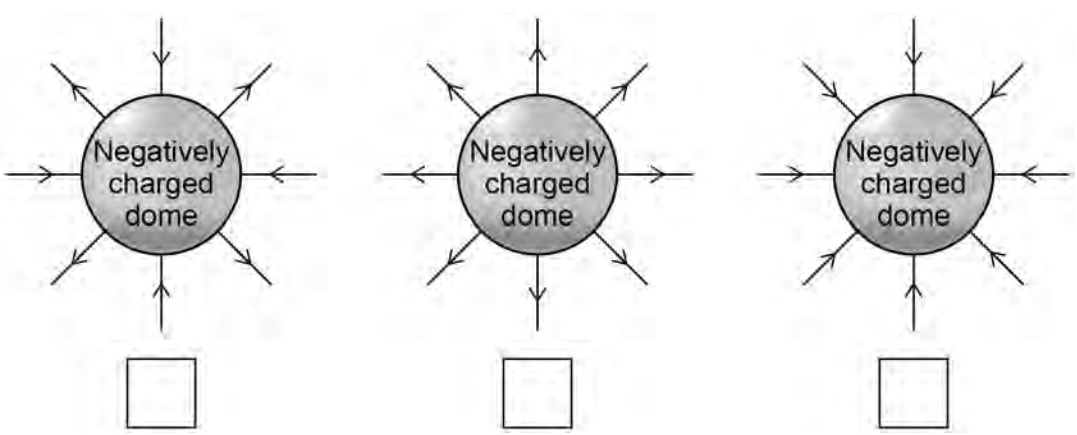

4.2.1.3 Current, resistance and potential difference

Question 68 · continued

Figure 3 shows the negatively charged metal dome and an earthed conductor.

Figure 3

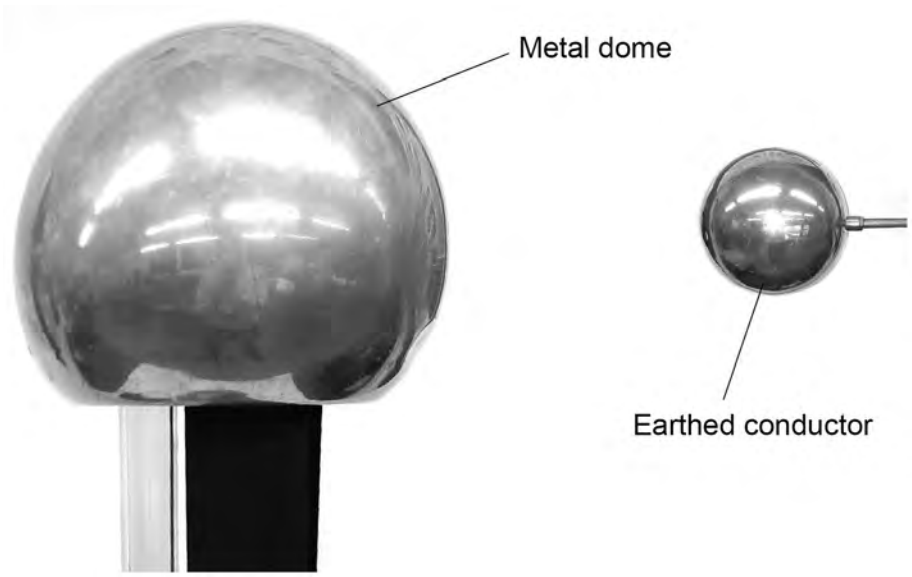

0 1 . 4 The air between the dome and the earthed conductor is an insulator.

Complete the sentence.

Choose the answer from the box.

[1 mark]

efficiency	**resistance**	**temperature**

The air between the dome and the earthed conductor has

a high _____.

Question 1 continues on the next page

Question 68 · continued

The earthed conductor is moved closer to the metal dome.

A spark jumps from the dome to the earthed conductor.

0 1 . 5 Complete the sentence.

Choose the answer from the box.

[1 mark]

earthed	**ionised**	**neutral**

The spark jumps because the air around the charged dome has

become _____.

0 1 . 6 Which particles are transferred when the spark jumps from the negatively charged metal dome to the earthed conductor?

[1 mark]

Tick (✓) **one** box.

- Electrons ☐
- Neutrons ☐
- Protons ☐

4.2.1.3 Current, resistance and potential difference

Question 68 · continued

0 1 . 7 The potential difference between the metal dome and earth is 300 000 V.

When the spark jumps there is a charge flow of 0.000 002 C.

Calculate the energy transferred by the spark.

Use the equation:

energy transferred = charge flow × potential difference

[2 marks]

Energy transferred = _____ J

8

Turn over for the next question

4.2.1.3 Current, resistance and potential difference

Question 69

0 2 **Figure 4** shows a student putting a coin into a vending machine that sells food.

Figure 4



The vending machine is connected to the mains electricity supply.

0 2 . 1 What is the frequency of the mains electricity supply in the UK?

[1 mark]

Tick (✓) **one** box.

50 hertz ☐

60 hertz ☐

100 hertz ☐

4.2.1.3 Current, resistance and potential difference

Question 69 · continued

0 2 . 2 What is the potential difference of the mains electricity supply in the UK?

[1 mark]

Tick (✓) **one** box.

12 volts ☐

230 volts ☐

20 000 volts ☐

The vending machine identifies the value of the coin by measuring the resistance of the coin.

0 2 . 3 The machine applies a potential difference of 0.45 V across the coin.

The current in the coin is 0.75 A.

Calculate the resistance of the coin.

Use the equation:

$$\text{resistance} = \frac{\text{potential difference}}{\text{current}}$$

[2 marks]

Resistance = _____ Ω

Question 69 · continued

The temperature inside the vending machine is monitored using an electrical circuit.

Figure 5 shows part of the circuit.

Figure 5

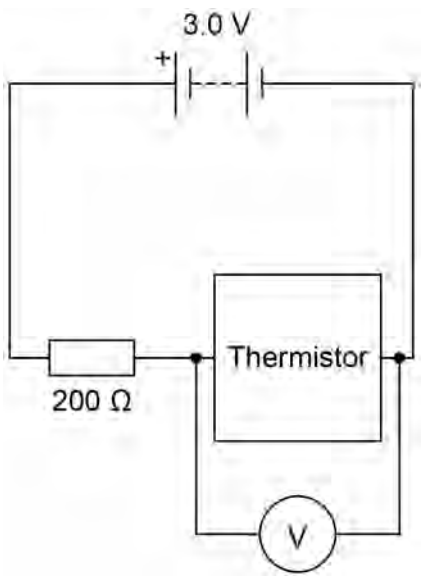

0 2 . 4 The circuit symbol for the thermistor is wrong.

What is the circuit symbol for a thermistor?

[1 mark]

Tick (✓) **one** box.

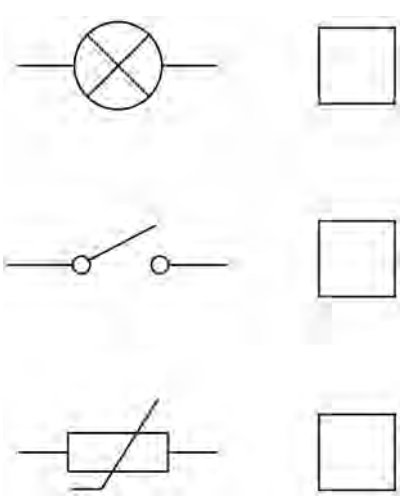

Question 69 · continued

0 2 . 5 How could the potential difference (pd) across the resistor be calculated?

[1 mark]

Tick (✓) **one** box.

pd across battery – pd across thermistor ☐

pd across battery + pd across thermistor ☐

pd across battery × pd across thermistor ☐

pd across battery ÷ pd across thermistor ☐

0 2 . 6 At one temperature, the thermistor in **Figure 5** has a resistance of 200 Ω.

What is the potential difference across the thermistor at this temperature?

Give a reason for your answer.

[2 marks]

Tick (✓) **one** box.

0.0 V ☐

1.0 V ☐

1.5 V ☐

2.0 V ☐

Reason _____

_____

4.2.1.3 Current, resistance and potential difference

Question 69 · continued

Figure 6 shows how the resistance of the thermistor varies with temperature.

Figure 6

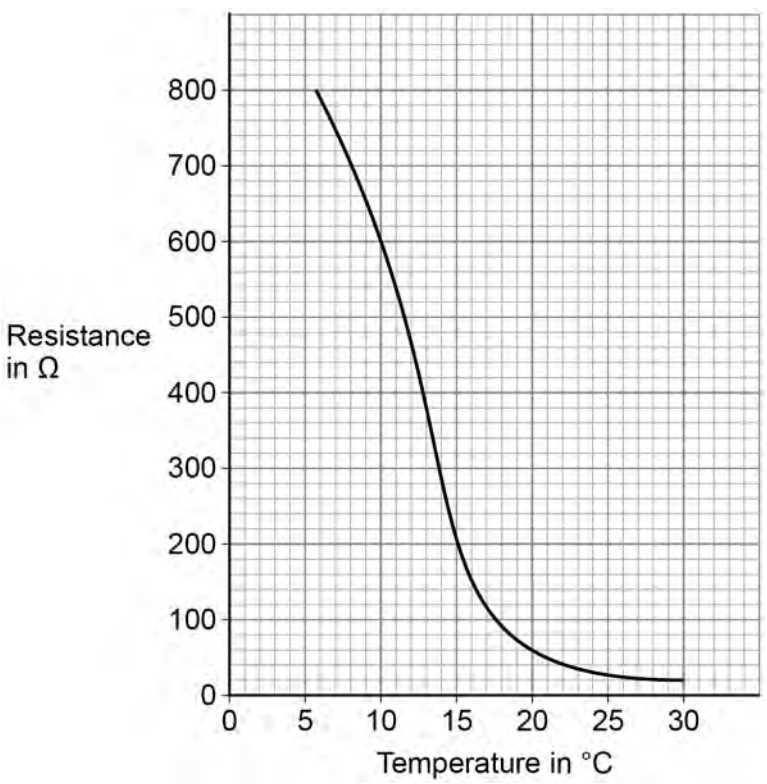

0 2 . 7 When the temperature of the thermistor is 10 °C, the resistance of the thermistor is 600 Ω.

Calculate the change in resistance when the temperature increased from 10 °C to 15 °C.

[2 marks]

Change in resistance = _____ Ω

10

4.2.1.3 Current, resistance and potential difference

Question 70

June 2024 | 8463/1F | Original Q8

0 8 A student had an unknown electrical component inside a sealed box.

Figure 14 shows the circuit the student used to identify the component.

Figure 14

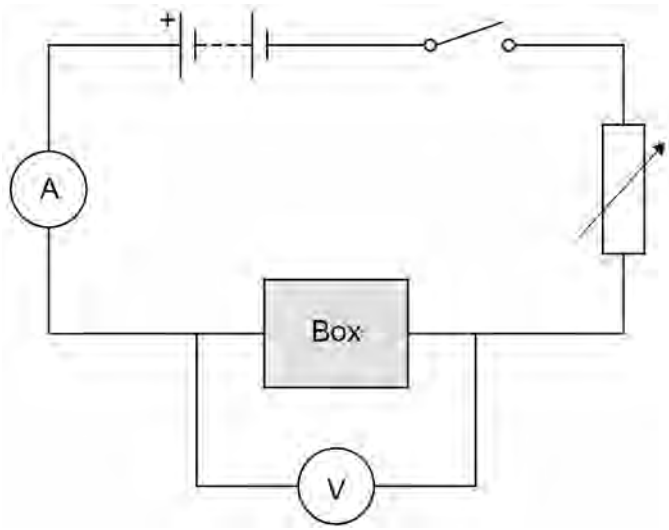

The student varied the potential difference across the component and measured the current in the component.

Table 3 shows the results when the potential difference across the component was 6.0 V.

Table 3

Potential difference in volts	Current in amps			
	1st reading	2nd reading	3rd reading	**Mean**
6.0	0.26	0.21	0.25	**X**

0 8 . 1 Calculate value **X** in **Table 3**.

[2 marks]

X = _____ A

4.2.1.3 Current, resistance and potential difference

Question 70 · continued

Figure 15 shows the results.

Figure 15

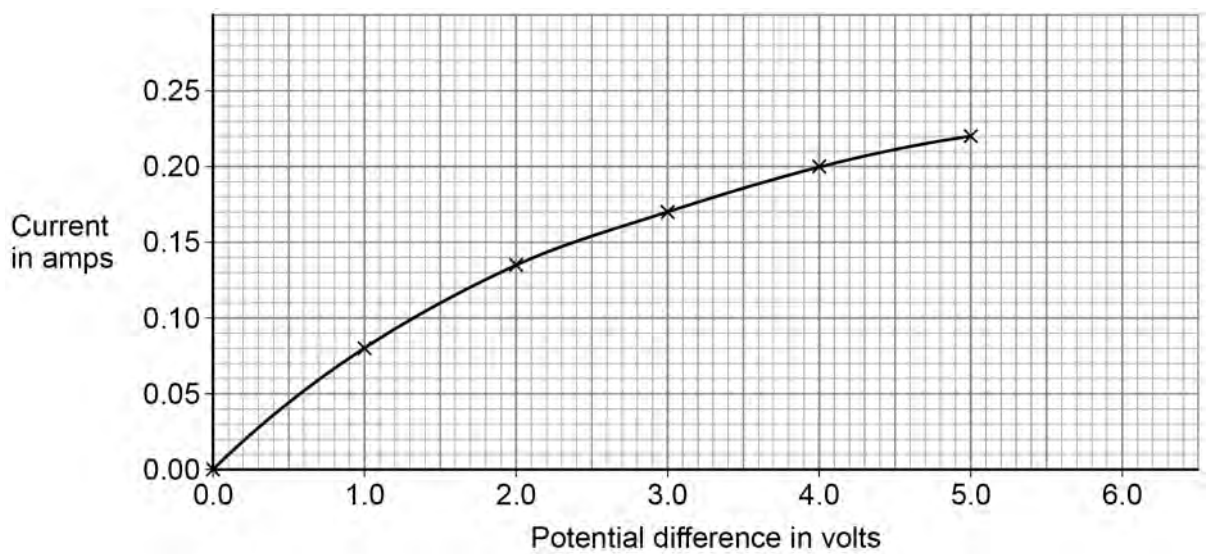

0 8 . 2 Calculate the power of the component when the potential difference across the component is 3.0 V.

Use **Figure 15** and the equation:

power = potential difference × current

[3 marks]

Power = _____ W

4.2.1.3 Current, resistance and potential difference

Question 70 · continued

0 8 . 3 Complete the sentence.

Choose the answer from the box.

[1 mark]

decreases	**stays the same**	**increases**

As the potential difference across the component increases, the gradient of the graph _____.

0 8 . 4 What is the component in the sealed box?

[1 mark]

Tick (✓) **one** box.

- Diode ☐
- Filament lamp ☐
- Resistor at constant temperature ☐

7

4.2.1.3 Current, resistance and potential difference

Question 71

June 2024 | 8463/1F | Original Q11

1 1 A student investigated how the length of a wire affects the resistance of the wire at constant temperature.

Figure 18 shows the circuit used.

Figure 18

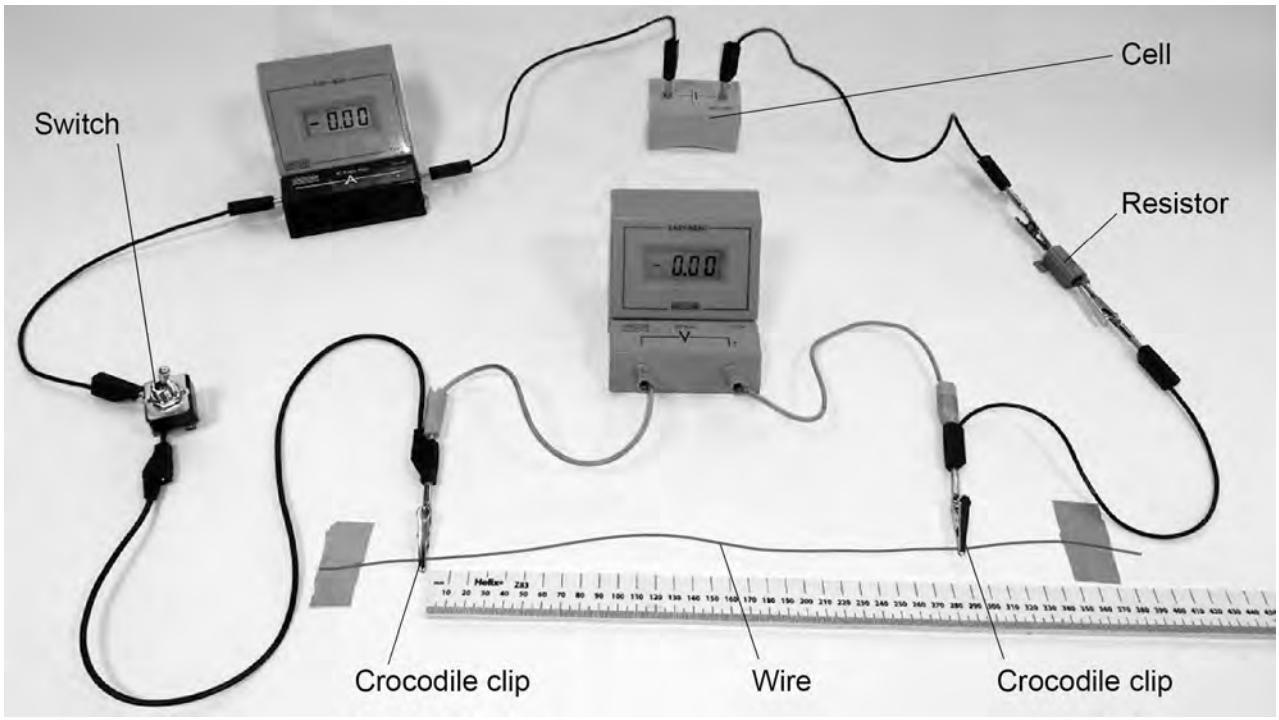

1 1 . 1 The student plotted a graph of resistance against the length of wire.

Describe a method the student could have used to collect the data needed to plot the graph.

[6 marks]

4.2.1.3 Current, resistance and potential difference

Question 71 · continued

1 1 . 2 Which graph shows the relationship between the resistance of a wire at constant temperature and its length?

[1 mark]

Tick (✓) **one** box.

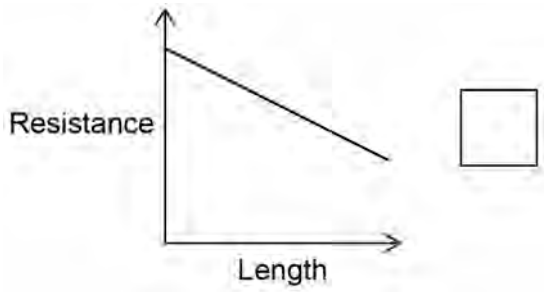

☐

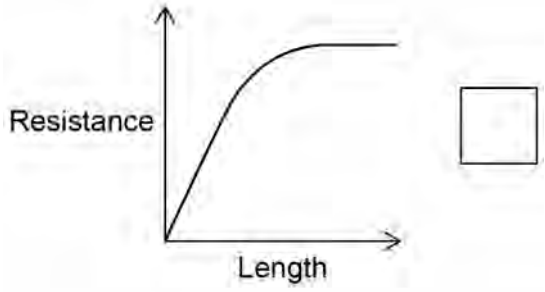

☐

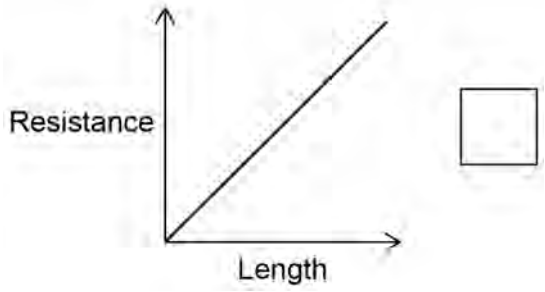

☐

Question 11 continues on the next page

4.2.1.3 Current, resistance and potential difference

Question 71 · continued

June 2024 | 8463/1F | Original Q11

1 1 . 3 The student used a cell that had a potential difference of 1.50 V.

Explain why the cell was **not** an electrical hazard to the student in the investigation.

[2 marks]

9

4.2.1.3 Current, resistance and potential difference

Question 72

June 2025 | 8463/1F | Original Q5

0 5 **Figure 8** shows an electric kettle used to boil water.

Figure 8



Question 72 · continued

0 5 . 1 The kettle is connected to the mains electricity supply by a three-core cable and plug.

Figure 9 shows the inside of the plug.

Figure 9

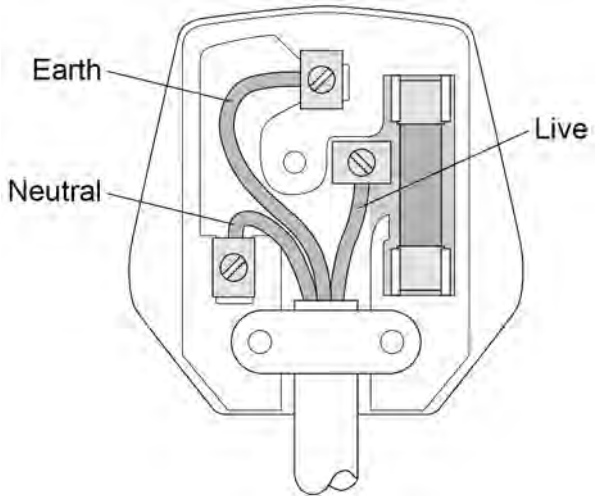

What are the colours of the insulation around the earth, live and neutral wires inside a plug?

[3 marks]

Choose answers from the box.

blue	**brown**	**green and yellow**	**red**	**yellow and brown**

Earth wire _____

Live wire _____

Neutral wire _____

Question 5 continues on the next page

Question 72 · continued

0 5 . 2 The plug in **Figure 9** contains a fuse.

What is the circuit symbol for a fuse?

[1 mark]

Tick (✓) **one** box.

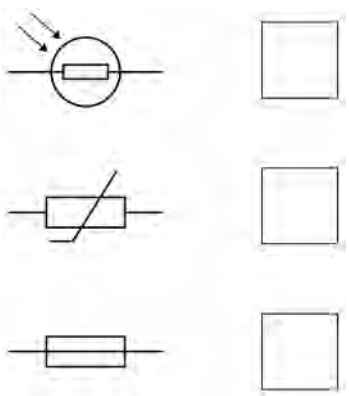

0 5 . 3 The electric kettle contains a heating element.

The power of the heating element is 2420 W.

The current in the heating element is 11.0 A.

Calculate the potential difference across the heating element.

Use the equation:

$$\text{potential difference} = \frac{\text{power}}{\text{current}}$$

[2 marks]

Potential difference = _____ V

Question 72 · continued

0 5 . 4 The power of the heating element is 2420 W.

The current in the heating element is 11.0 A.

Calculate the resistance of the heating element.

Use the equation:

$$\text{resistance} = \frac{\text{power}}{(\text{current})^2}$$

[2 marks]

Resistance = _____ Ω

0 5 . 5 Kettle **A** and kettle **B** have the same total power input.

Kettle **A** has a greater efficiency than kettle **B**.

Which **two** of the following describe heating water in kettle **A** compared with kettle **B**?

[2 marks]

Tick (✓) **two** boxes.

- A greater percentage of energy is usefully transferred by kettle **A**. ☐
- Kettle **A** has a lower useful power output. ☐
- Kettle **A** takes less time to boil the same volume of water. ☐
- More energy is wasted by kettle **A** each second. ☐
- The temperature of the same volume of water increases more slowly in kettle **A**. ☐

10

4.2.1.3 Current, resistance and potential difference

Question 73

June 2025 | 8463/1F | Original Q7

0 7 A student built a circuit to investigate how the efficiency of a motor varies with the speed of the motor.

The symbol for a motor is 

Figure 12 shows the circuit.

Figure 12

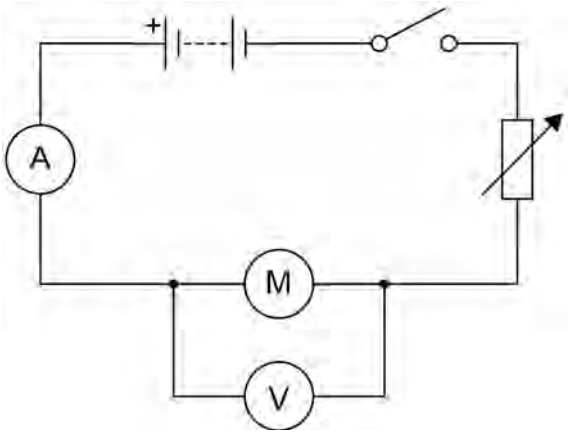

The student used the motor to lift a mass through a height of 1.0 m.

0 7 . 1 The motor took 12 seconds to lift the mass.

The charge flow through the circuit was 6.0 C.

Calculate the current in the circuit.

Use the equation:

$$\text{current} = \frac{\text{charge flow}}{\text{time}}$$

[2 marks]

Current = _____ A

4.2.1.3 Current, resistance and potential difference

Question 73 · continued

0 7 . 2 The potential difference across the motor was 8.0 V.

The charge flow through the motor was 6.0 C.

Calculate the energy transferred to the motor.

Use the equation:

energy transferred = charge flow × potential difference

[2 marks]

Energy transferred = _____ J

Question 7 continues on the next page

Question 73 · continued

Use the Physics Equations Sheet to answer questions **07.3** and **07.4**.

0 7 . 3 Which equation links efficiency, total input energy transfer and useful output energy transfer?

[1 mark]

Tick (✓) **one** box.

efficiency = useful output energy transfer × total input energy transfer ☐

efficiency = $\frac{\text{total input energy transfer}}{\text{useful output energy transfer}}$ ☐

efficiency = $\frac{\text{useful output energy transfer}}{\text{total input energy transfer}}$ ☐

0 7 . 4 The efficiency of the motor was 0.70

The useful output energy transfer of the motor was 1.96 J.

Calculate the total input energy transfer to the motor.

[3 marks]

Total input energy transfer = _____ J

4.2.1.3 Current, resistance and potential difference

Question 73 · continued

The student adjusted the speed at which the mass was lifted.

For each speed, the student determined the efficiency of the motor.

Figure 13 shows the results.

Figure 13

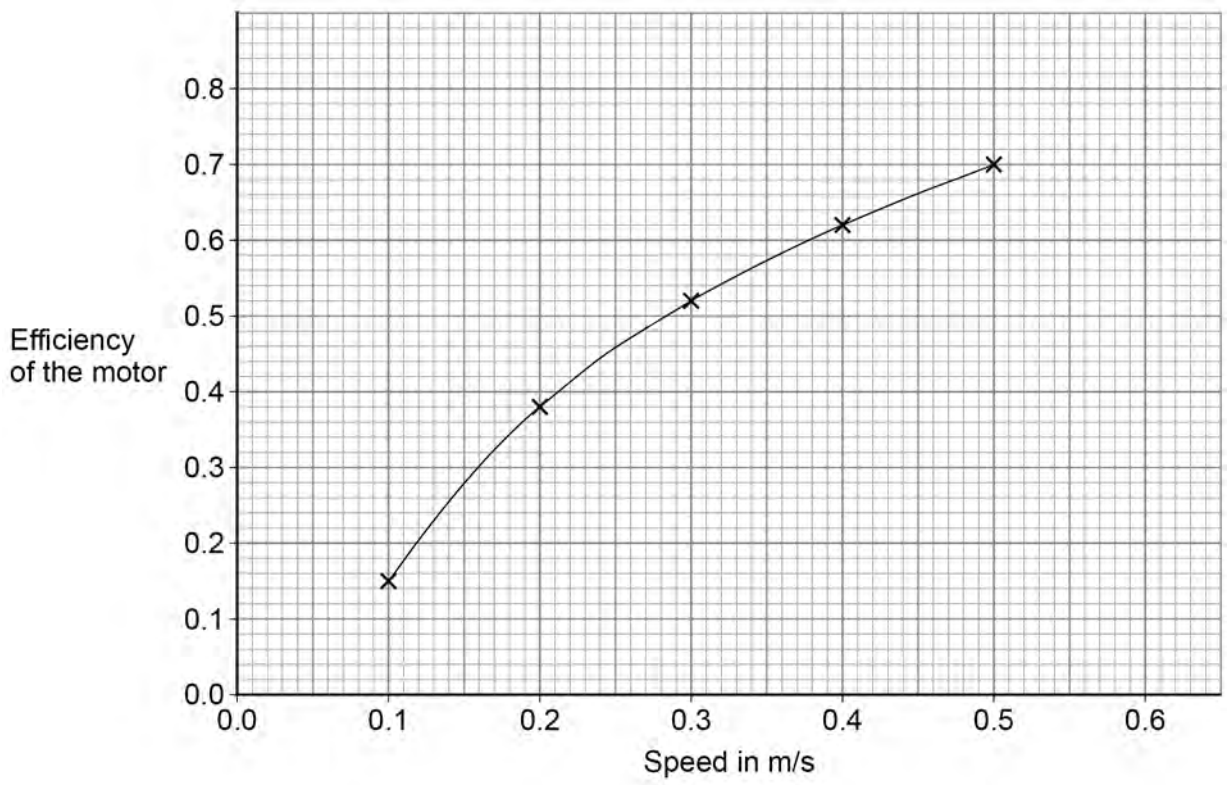

0 7 . 5 Use **Figure 13** to predict the efficiency of the motor when the speed is 0.6 m/s.

[1 mark]

Efficiency = _____

0 7 . 6 How does **Figure 13** show that the efficiency of the motor is **not** directly proportional to the speed?

[1 mark]

_____

_____

_____

10

4.2.1.3 Current, resistance and potential difference

Question 74

June 2025 | 8463/1F | Original Q10

1 0 A student investigated how the current in an LED varies with the potential difference across the LED.

Figure 18 shows the circuit used.

Figure 18

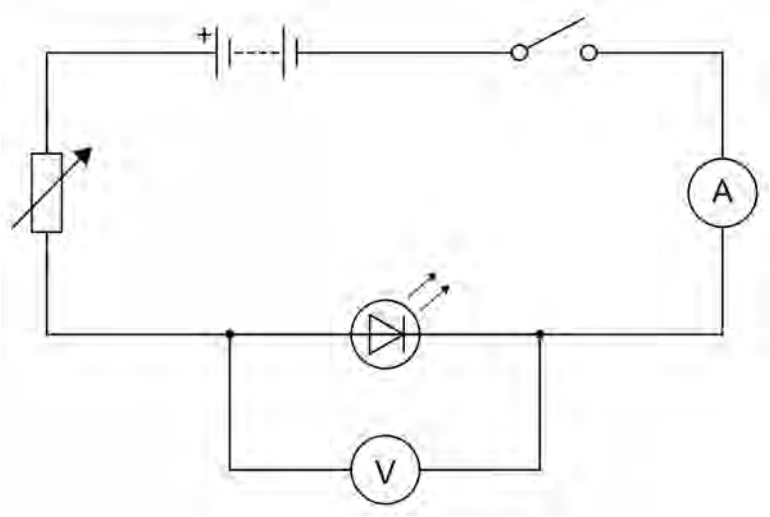

Figure 19 shows the results.

Figure 19

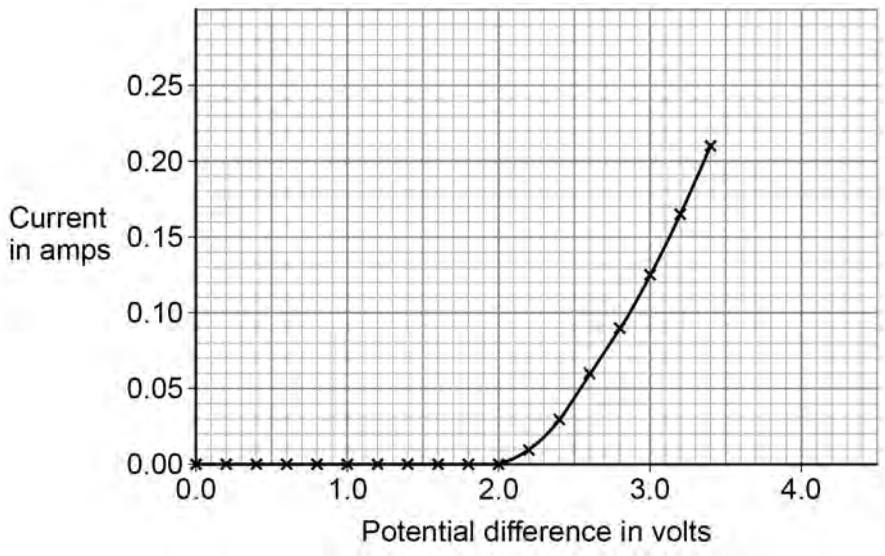

1 0 . 1 Give **one** way the student could have varied the potential difference across the LED.

[1 mark]

Question 74 · continued

Use the Physics Equations Sheet to answer questions **10.2** and **10.3**.

10.2 Which of the following equations links current (I), potential difference (V) and resistance (R)?

[1 mark]

Tick (✓) **one** box.

$V = I^2 \times R$ ☐

$V = I \times R$ ☐

$V = \frac{I}{R}$ ☐

$V = \frac{R}{I}$ ☐

10.3 Determine the resistance of the LED when the potential difference across the LED was 3.0 V.

Use **Figure 19**.

[4 marks]

Resistance = _____ Ω

Question 10 continues on the next page

4.2.1.3 Current, resistance and potential difference

Question 74 · continued

1 0 . 4 The student reversed the connections to the power supply and varied the potential difference across the LED.

Explain why the ammeter displayed a value of 0.0 A for all the values of potential difference the student used.

[2 marks]

8