AQA GCSE Chemistry | 8462

SPECIFICATION POINT 4.2.4.1

# Sizes of particles and their properties

## Past-paper questions

| | |
|---|---|
| Tier | **Foundation** |
| Question groups | **16** |
| Available paper years | **2008–2025** |

## Using this booklet

1. Answer the questions in order and show your working.
2. Original question numbers and marks are retained.
3. Print at actual size (100%) for measuring questions.
4. Use the companion answer booklet to check your work.

**Name:** _____ **Date:** _____

Whole questions are retained for context, so some parts assess other specification points. Current and legacy sources are labelled. Continue on extra paper if needed.

**4.2.4.1 Sizes of particles and their properties**

**Question 01**

January 2008 | CHY2F | Original Q7 | Legacy

**7** Read this passage about metals.

Metals are crystalline materials. The metal crystals are normally about 20 000 nm (nanometres) in diameter. The atoms inside these crystals are arranged in layers.

A new nanoscience process produces nanocrystalline metals. Nanocrystalline metals are stronger and harder than normal metals.

It is hoped that nanocrystalline metals can be used in hip replacements.

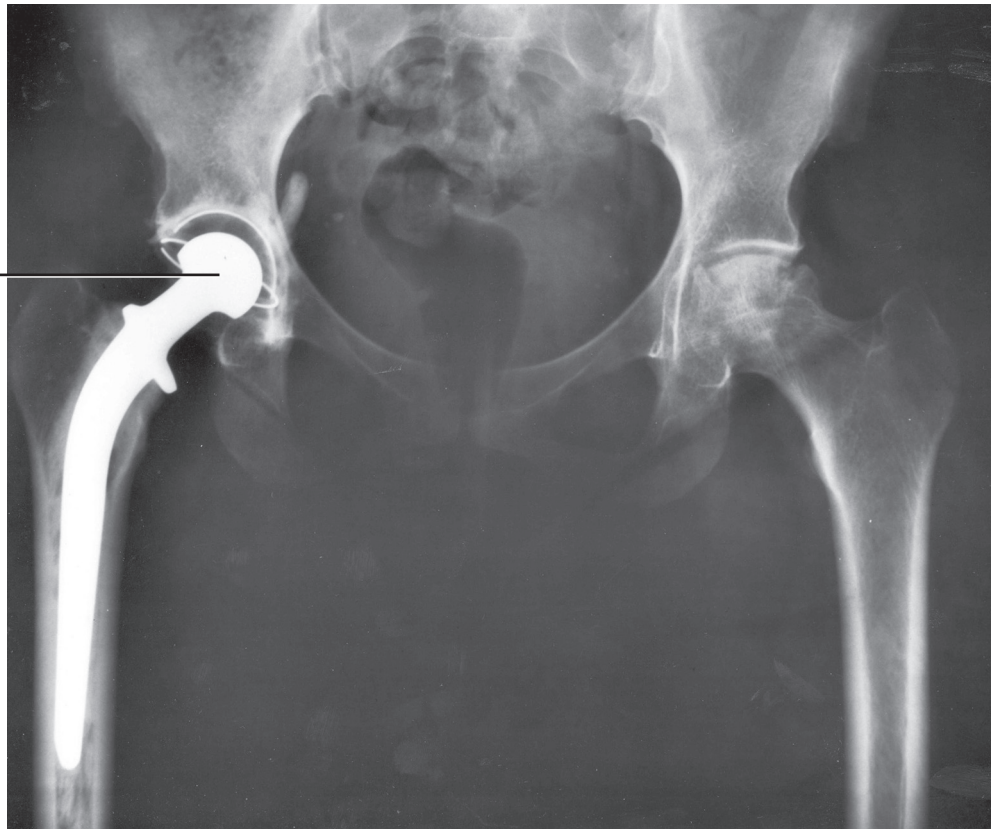


The use of nanocrystalline metals should give people better hip replacements which last longer.

(a) State why metals can be bent and hammered into different shapes.

.....

.....

*(1 mark)*

**4.2.4.1 Sizes of particles and their properties**

**Question 01 · continued**



*BLANK*

(b) How is the size of the crystals in nanocrystalline metals different from the size of the crystals in normal metals?

.....

.....

*(1 mark)*

(c) Hip joints are constantly moving when people walk.

Suggest and explain why the hip replacement made of nanocrystalline metal should last longer than one made of normal metals.

.....

.....

.....

.....

*(2 marks)*

4

**4.2.4.1 Sizes of particles and their properties**

**Question 02**

June 2008 | CHY2F | Original Q6 | Legacy

**6** Read the article about the use of nanoparticles in sun creams.

**Sun creams**

Many sun creams use nanoparticles. These sun creams are very good at absorbing radiation, especially ultraviolet radiation. Owing to the particle size, the sun creams spread more easily, cover better and save money because you use less. The new sun creams are also transparent, unlike traditional sun creams which are white. The use of nanoparticles is so successful that they are now used in more than 300 sun cream products.

Some sun creams contain nanoparticles of titanium oxide. Normal-sized particles of titanium oxide are safe to put on the skin.

It is thought that nanoparticles can pass through the skin and travel around the body more easily than normal-sized particles. It is also thought that nanoparticles might be toxic to some types of cell, such as skin, bone, brain and liver cells.

**6** (a) (i) How is the size of nanoparticles different from normal-sized particles of titanium oxide?

.....

*(1 mark)*

**6** (a) (ii) Suggest how the size of nanoparticles might help them to enter the body more easily.

.....

.....

*(1 mark)*

**6** (b) Give **two** advantages of using nanoparticles in sun creams.

1 .....

.....

2 .....

.....

*(2 marks)*

**6** (c) Why might nanoparticles be dangerous inside the body?

.....

.....

*(1 mark)*

5

**4.2.4.1 Sizes of particles and their properties**

**Question 03**

June 2009 | CHY2F | Original Q6 | Legacy

**6** Read the article and then answer the questions that follow.

**Hydrogen fuel for cars?**

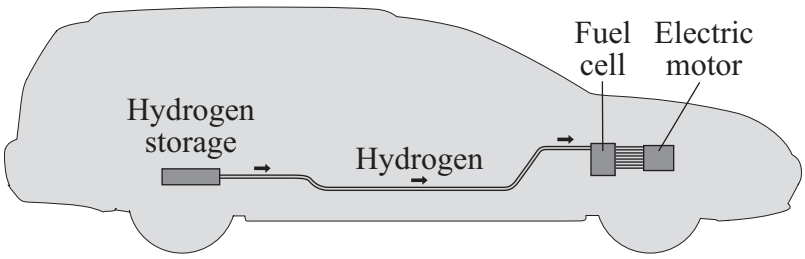


Hydrogen is an excellent fuel. On combustion it reacts with oxygen from the air to release a large amount of energy. The only product of combustion is water which does not cause pollution. Hydrogen gas can be stored under pressure in a cylinder but a leak of the gas could cause an explosion.

It has been found that lithium nitride can absorb and then release large volumes of hydrogen. Hydrogen stored in lithium nitride will not explode.

The problem is that the rate at which hydrogen is absorbed and then released from normal sized particles of lithium nitride is slow.

Recently scientists have made 'nanosized' particles of lithium nitride. The 'nanosized' particles have the advantage that they absorb and release the hydrogen much faster when needed in the fuel cell.

**4.2.4.1 Sizes of particles and their properties**

**Question 03 · continued**



*for mark*

**6** (a) Use information from the article to help you to answer these questions.

**6** (a) (i) Give **two** reasons why hydrogen is an excellent fuel.

1 .....

.....

2 .....

.....

*(2 marks)*

**6** (a) (ii) Hydrogen stored in lithium nitride is safer in an accident than a cylinder full of hydrogen gas.

State why.

.....

.....

*(1 mark)*

**6** (a) (iii) What is the advantage of using 'nanosized' particles of lithium nitride instead of normal sized particles for storing hydrogen?

.....

.....

*(1 mark)*

**Question 6 continues on the next page**

Question 03 · continued



*for mark*

**6** (b) Lithium nitride is an ionic compound that contains lithium ions ($Li^+$) and nitride ions ($N^{3-}$).

**6** (b) (i) The periodic table on the Data Sheet may help you to answer this question.

Which diagram, **A**, **B** or **C**, represents the electronic structure of a lithium atom?
Write your answer in the box.

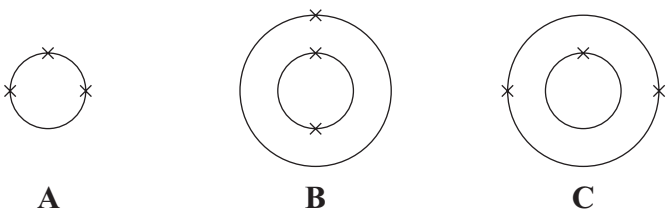

**A** **B** **C**

Diagram ☐

*(1 mark)*

**6** (b) (ii) Tick (✓) the statement which describes how a lithium atom (Li) changes into a lithium ion ($Li^+$).

| Statement | Tick (✓) |
|---|---|
| A lithium atom loses a neutron. | |
| A lithium atom loses an electron. | |
| A lithium atom loses a proton. | |

*(1 mark)*

**6** (b) (iii) The diagram shows the electronic structure of a nitrogen atom.

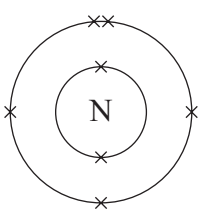


Which diagram, **A**, **B** or **C**, represents the electronic structure of a nitride ion ($N^{3-}$)?
Write your answer in the box.

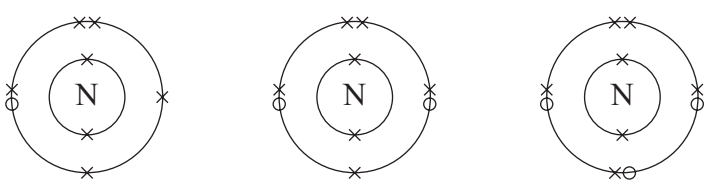


**A** **B** **C**

Diagram ☐

*(1 mark)*

**4.2.4.1 Sizes of particles and their properties**

**Question 03 · continued**



*for mark*

**6** (c) The equation for the reaction of lithium nitride with hydrogen is:

$$Li_3N + 2H_2 \rightleftharpoons LiNH_2 + 2LiH$$

What does the $\rightleftharpoons$ symbol mean?

Draw a ring around your answer.

**reversible reaction** **endothermic reaction** **neutralisation**

*(1 mark)*

**6** (d) Draw a ring around the correct answer in each box to complete the sentences.

**6** (d) (i) 'Nanosized' particles of lithium nitride will be

| |
|---|
| much larger |
| a little larger |
| much smaller |

than normal sized particles of lithium nitride. *(1 mark)*

**6** (d) (ii) One of the reasons why 'nanosized' particles have different properties from normal sized particles is that they have a greater

| |
|---|
| density |
| mass |
| surface area |

than normal sized particles of lithium nitride. *(1 mark)*

10

**4.2.4.1 Sizes of particles and their properties**

**Question 04**



**4** Lightweight handlebars for bicycles are made from materials containing carbon nanotubes.

Carbon nanotubes are lightweight but very strong.

The diagram shows the structure of a carbon nanotube.

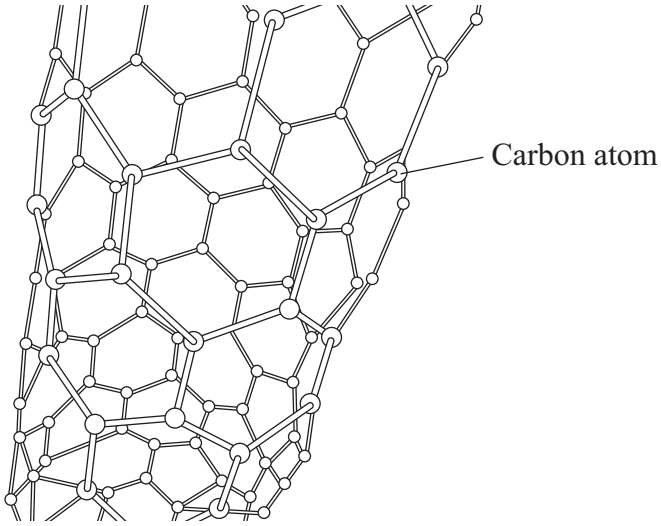


**4** (a) What does the term 'nano' tell you about the diameter of carbon nanotubes?

Tick (✓) the correct answer in the table.

| Answer | Tick (✓) |
|---|---|
| The diameter of the tube is very small. | |
| The diameter of the tube is large. | |
| The diameter of the tube is very large | |

*(1 mark)*

**4.2.4.1 Sizes of particles and their properties**

**Question 04 · continued**



*for mark*

**4** (b) Look at the diagram and then draw a ring around the correct word to complete each sentence.

**4** (b) (i) Carbon nanotubes are similar to graphite because each carbon atom is joined to

two
three
four

other carbon atoms.

*(1 mark)*

**4** (b) (ii) The carbon atoms are joined by

covalent
ionic
metallic

bonds.

*(1 mark)*

**4** (b) (iii) Carbon nanotubes are very strong because the

atoms
bonds
electrons

are hard to break.

*(1 mark)*

**4**

**4.2.4.1 Sizes of particles and their properties**

**Question 05**

June 2011 | CHY2F | Original Q6 | Legacy

**6** Read the article and then answer the questions.

**TOXIC SOCKS?**

Silver nanoparticles are added to the fibres used to make some socks. Silver has the special property that it can kill bacteria. As a result there are no unpleasant smells when wearing these socks.



Some scientists are concerned about the use of silver nanoparticles in socks.

The silver can be released from the socks when they are washed. This silver may end up in rivers. Silver in rivers may kill fish.

Scientists found that some makes of socks release the silver more easily than others. Socks in which the silver nanoparticles are trapped in the fibres released very little silver when washed.

**6 (a)** Suggest why silver stops unpleasant smells when wearing the socks.

.....

.....

*(1 mark)*

**6 (b)** How is the size of silver nanoparticles different from normal sized silver particles?

.....

*(1 mark)*

4.2.4.1 Sizes of particles and their properties

Question 05 · continued



**6 (c)** The silver nanoparticles are more effective at preventing unpleasant smells than normal sized silver particles.

Suggest why.

.....

.....

*(1 mark)*

**6 (d)** The silver nanoparticles should be trapped in the sock fibres.

Use the information in the article to explain why.

.....

.....

.....

.....

*(2 marks)*

5

### 4.2.4.1 Sizes of particles and their properties

**Question 06**

June 2012 | CH2FP | Original Q2 | Legacy

**2** Gold and gold ions are used as catalysts.

**2 (a)** An atom of gold is represented as:

$$^{197}_{79}Au$$

Complete the sentences.

The atomic number of gold is ..... .

The number of electrons in an atom of gold is ..... .

*(2 marks)*

**2 (b)** Scientists have found that gold nanoparticles are very good catalysts.

Draw a ring around the correct answer to complete the sentence.

A gold nanoparticle contains a few | hundred / thousand / million | atoms.

*(1 mark)*

**2 (c)** The formation of a gold ion ($Au^{3+}$) from a gold atom (Au) is shown in the symbol equation.

$$Au \rightarrow Au^{3+} + 3e^-$$

**2 (c) (i)** Complete the sentence.

The particles lost when a gold atom becomes a gold ion

are called ..... .

*(1 mark)*

**2 (c) (ii)** Draw a ring around the correct answer to complete the sentence.

The number of these particles lost when a gold atom becomes a gold ion is | one. / two. / three. |

*(1 mark)*

4.2.4.1 Sizes of particles and their properties

Question 06 · continued



**2 (d)** Gold ions are used as a catalyst in the reaction to make chloroethene.

How does a catalyst help a reaction?

.....

*(1 mark)*

**2 (e)** Chloroethene can react to make a thermosoftening polymer.

**2 (e) (i)** Draw a ring around the correct answer to complete the sentence.

When heated, a thermosoftening polymer will

dissolve.

melt.

solidify.

*(1 mark)*

**2 (e) (ii)** Polymer **B** is a different type of polymer.

The diagram shows the structure of polymer **B**.

**Polymer B**

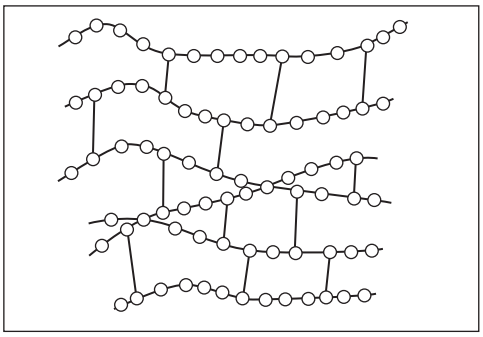

How can you tell from the diagram that polymer **B** is **not** thermosoftening?

.....

.....

*(1 mark)*

8

### 4.2.4.1 Sizes of particles and their properties

**Question 07**

June 2013 | CH2FP | Original Q1 | Legacy

**1** This question is about lithium and sodium.

**1 (a)** Use the Chemistry Data Sheet to help you to answer this question.

In which group of the periodic table are lithium and sodium? Group ☐

*(1 mark)*

**1 (b)** A lithium atom can be represented as $^{7}_{3}Li$

The diagram represents the lithium atom.

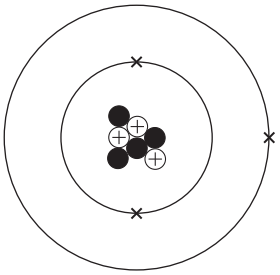

**1 (b) (i)** Some particles in the nucleus have a positive charge.

What is the name of these particles? .....

*(1 mark)*

**1 (b) (ii)** Some particles in the nucleus have no charge.

What is the name of these particles? .....

*(1 mark)*

**1 (b) (iii)** Use the correct answer from the box to complete the sentence.

| 3 | 4 | 7 |
|---|---|---|

The mass number of this atom of lithium is ☐

*(1 mark)*

**Question 1 continues on the next page**

4.2.4.1 Sizes of particles and their properties

Question 07 · continued



**1 (c)** Sodium reacts with chlorine to produce sodium chloride.

sodium + chlorine ⟶ sodium chloride

The diagram shows how the reaction happens.

Only the outer electrons are shown.

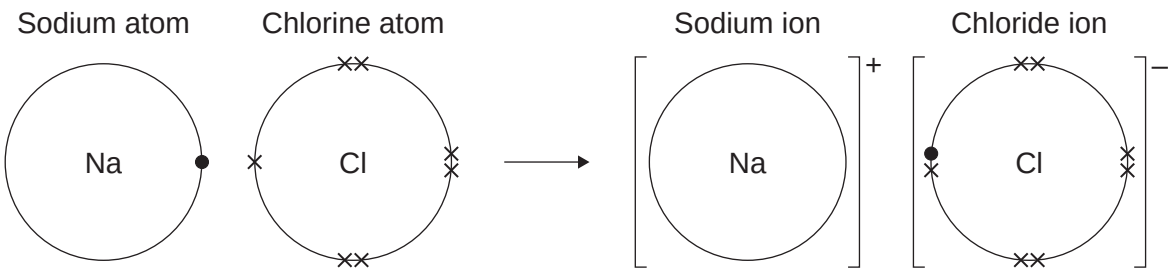


Draw a ring around the correct answer to complete each sentence.

**1 (c) (i)** A sodium atom changes into a sodium ion by [gaining / losing / sharing] an electron.

*(1 mark)*

**1 (c) (ii)** A sodium ion has [a negative / no / a positive] charge.

*(1 mark)*

**1 (c) (iii)** The ions in sodium chloride are held together by strong [covalent / electrostatic / magnetic] forces.

*(1 mark)*

4.2.4.1 Sizes of particles and their properties

Question 07 · continued



**1 (d)** Sodium chloride is an ionic compound.

Tick (✓) **two** properties of ionic compounds.

| Property | Tick (✓) |
|---|---|
| Do **not** dissolve in water | |
| High melting points | |
| Low boiling points | |
| Strong bonds | |

*(2 marks)*

**1 (e) (i)** The formula of sodium chloride is NaCl

Calculate the relative formula mass of sodium chloride.

Relative atomic masses: Na = 23; Cl = 35.5

.....

.....

Relative formula mass = .....

*(1 mark)*

**1 (e) (ii)** Draw a ring around the correct answer to complete the sentence.

The relative formula mass of a substance, in grams, is one ion / isotope / mole of the substance.

*(1 mark)*

**1 (f)** Nanoparticles of sodium chloride (salt) are used to flavour crisps.

What are nanoparticles?

.....

.....

*(1 mark)*

12

4.2.4.1 Sizes of particles and their properties

Question 08

June 2016 | CH2FP | Original Q2 | Legacy

**2** This question is about substances containing carbon atoms.

**2 (a)** Diamond is made of carbon atoms.

**2 (a) (i)** Diamond is used for tips of drills.

**Figure 3** shows a drill.

**Figure 3**



Give **one** reason why diamond is used for tips of drills.

**[1 mark]**

_____

_____

**2 (a) (ii)** Diamond nanoparticles can be made.

Use the correct answer from the box to complete the sentence.

**[1 mark]**

| | | |
|---|---|---|
| **hundred** | **million** | **thousand** |

Nanoparticles contain a few _____ atoms.

**2 (b)** Graphite is made of carbon atoms.

**Figure 4** shows the structure of graphite.

**Figure 4**

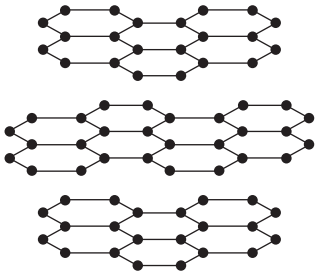

4.2.4.1 Sizes of particles and their properties

Question 08 · continued



**2 (b) (i)** What type of bonding does graphite have?

**[1 mark]**

Tick (✓) **one** box.

Covalent ☐

Ionic ☐

Metallic ☐

**2 (b) (ii)** How many carbon atoms does each carbon atom bond to in graphite?

**[1 mark]**

Tick (✓) **one** box.

1 ☐

2 ☐

3 ☐

4 ☐

**2 (b) (iii)** What is a property of graphite?

**[1 mark]**

Tick (✓) **one** box.

Dissolves in water ☐

Has a low melting point ☐

Soft and slippery ☐

**Question 2 continues on the next page**

4.2.4.1 Sizes of particles and their properties

Question 08 · continued



**2 (c)** Poly(ethene) is made of carbon and hydrogen atoms.

Poly(ethene) is a thermosoftening polymer.

**Figure 5** shows the structure of a thermosoftening polymer.

**Figure 5**

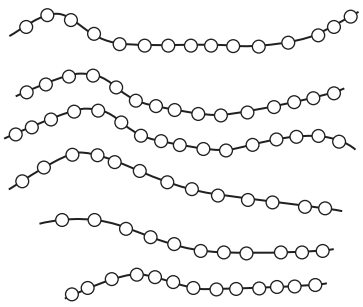

**2 (c) (i)** Complete the sentence.

**[1 mark]**

Between the polymer chains in a thermosoftening polymer there

are no _____ .

**2 (c) (ii)** Use the correct answer from the box to complete the sentence.

**[1 mark]**

| | | |
|---|---|---|
| **condense** | **dissolve** | **melt** |

Heating would cause a thermosoftening polymer to _____ .

**2 (c) (iii)** Many ethene molecules react together to make poly(ethene).

Different types of poly(ethene) can be made by changing the conditions for the reaction. Suggest **two** conditions that could be changed.

**[2 marks]**

1 _____

2 _____

4.2.4.1 Sizes of particles and their properties

Question 08 · continued



**2 (d)** **Figure 6** shows how the atoms are bonded in methane.

**Figure 6**

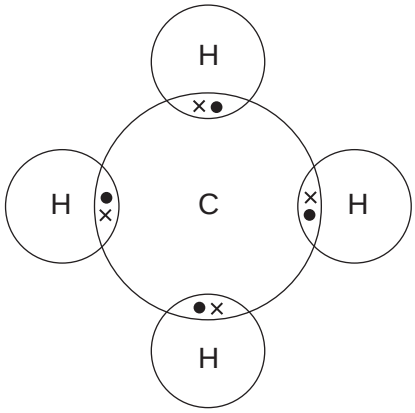


**2 (d) (i)** What is the formula for methane?

**[1 mark]**

Tick (✓) **one** box.

$C_4H$ ☐

$CH_4$ ☐

$C_4H_4$ ☐

**2 (d) (ii)** Methane has a low boiling point.

What does methane consist of?

**[1 mark]**

Tick (✓) **one** box.

Charged ions ☐

A giant lattice ☐

Small molecules ☐

11

### 4.2.4.1 Sizes of particles and their properties

**Question 09**

June 2017 | CH2FP | Original Q3 | Legacy

**3** This question is about oxygen and substances containing oxygen.

**3 (a)** Oxygen is a gas at room temperature.

**3 (a) (i)** What type of bonding holds the atoms together in oxygen?

**[1 mark]**

Tick (✓) **one** box.

- Covalent ☐
- Ionic ☐
- Metallic ☐

**3 (a) (ii)** Which **two** statements about oxygen are true?

**[2 marks]**

Tick (✓) **two** boxes.

- Oxygen consists of a giant lattice. ☐
- Oxygen consists of small molecules. ☐
- Oxygen conducts electricity. ☐
- Oxygen is an alloy. ☐
- Oxygen has a low boiling point. ☐

**Question 3 continues on the next page**

4.2.4.1 Sizes of particles and their properties

Question 09 · continued



**3 (b)** Magnesium oxide is produced when magnesium reacts with oxygen.

**3 (b) (i)** **Figure 6** shows what happens to the electrons in the outer shells when a magnesium atom reacts with an oxygen atom.

The dots (•) and crosses (×) represent electrons.

Only the outer electrons are shown.

**Figure 6**

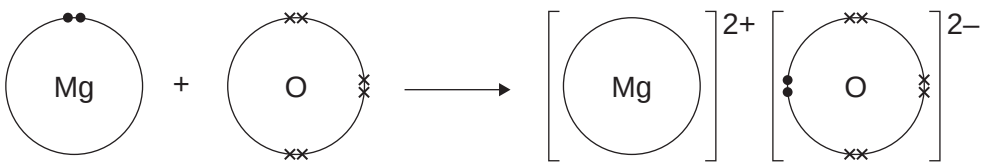


Describe, in terms of electrons, what happens when a magnesium atom reacts with an oxygen atom to produce magnesium oxide.

**[4 marks]**

4.2.4.1 Sizes of particles and their properties

Question 09 · continued



**3 (b) (ii)** Nanoparticles of magnesium oxide can be made.

Which **two** statements about nanoparticles are true?

**[2 marks]**

Tick (✓) **two** boxes.

- Nanoparticles are very small atoms. ☐
- Nanoparticles can return to their original shape after being deformed. ☐
- Nanoparticles contain a few hundred atoms. ☐
- Nanoparticles contain millions of molecules. ☐
- Nanoparticles have a high surface area to volume ratio. ☐

**3 (c)** Silicon dioxide has a very high melting point.

Silicon dioxide does not conduct electricity when molten.

Use the correct answer from the box to complete the sentence.

**[1 mark]**

| giant covalent | giant ionic | metallic |
|---|---|---|

The structure of silicon dioxide is _____ .

10

### 4.2.4.1 Sizes of particles and their properties

**Question 10**

June 2018 | 8462/1F | Original Q1

**0 1** This question is about mixtures.

**0 1 . 1** Substances are separated from a mixture using different methods.

Draw **one** line from each substance and mixture to the best method of separation.

**[3 marks]**

| Substance and mixture | Method of separation |
|---|---|
| Ethanol from ethanol and water | Chromatography |
| Salt from sea water | Crystallisation |
| The different colours in black ink | Electrolysis |
| | Filtration |
| | Fractional distillation |

4.2.4.1 Sizes of particles and their properties

Question 10 · continued



**0 1 . 2** A student filters a mixture.

**Figure 1** shows the apparatus.

**Figure 1**

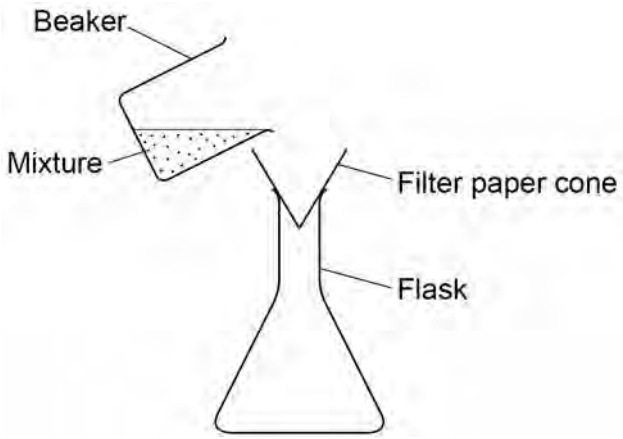


Suggest **one** improvement to the apparatus.

**[1 mark]**

_____

_____

**0 1 . 3** Complete the sentences.

Choose answers from the box.

**[2 marks]**

| | | | | |
|---|---|---|---|---|
| **condense** | **evaporate** | **freeze** | **melt** | **solidify** |

In simple distillation, the mixture is heated to make the liquid _____.

The vapour is then cooled to make it _____.

4.2.4.1 Sizes of particles and their properties

Question 10 · continued



**Figure 2** shows the arrangement of atoms in a pure metal and in a mixture of metals.

**Figure 2**

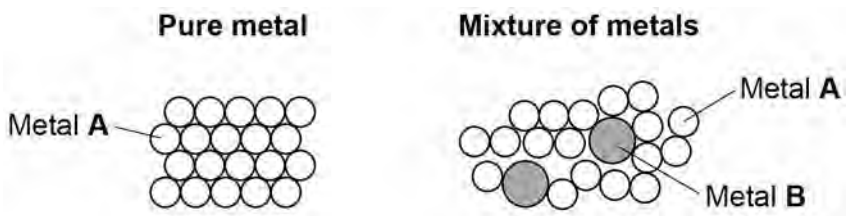


**0 1 . 4** Calculate the percentage of metal **B** atoms in the mixture of metals shown in **Figure 2**.

**[2 marks]**

Percentage of metal **B** atoms = _____ %

**0 1 . 5** What is a mixture of metals called?

**[1 mark]**

Tick **one** box.

- An alloy ☐
- A compound ☐
- A molecule ☐
- A polymer ☐

4.2.4.1 Sizes of particles and their properties

Question 10 · continued



**0 1 . 6** Why is the mixture of metals in **Figure 2** harder than the pure metal?

**[1 mark]**

Tick **one** box.

- The atoms in the mixture are different shapes. ☐
- The layers in the mixture are distorted. ☐
- The layers in the mixture slide more easily. ☐
- The mixture has a giant structure. ☐

**0 1 . 7** A nanoparticle of pure metal **A** is a cube.

Each side of the cube has a length of 20 nm.

**Figure 3** shows the cube.

**Figure 3**

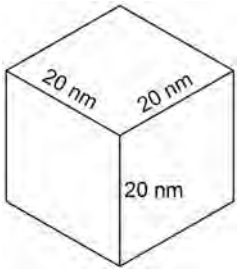


What is the volume of the nanoparticle?

**[1 mark]**

Tick **one** box.

- 20 $nm^3$ ☐
- 60 $nm^3$ ☐
- 400 $nm^3$ ☐
- 8000 $nm^3$ ☐

11

4.2.4.1 Sizes of particles and their properties

Question 11

June 2019 | 8462/1F | Original Q10

**1 0** This question is about materials and their properties.

**1 0 . 1** **Figure 13** shows a carbon nanotube.

**Figure 13**

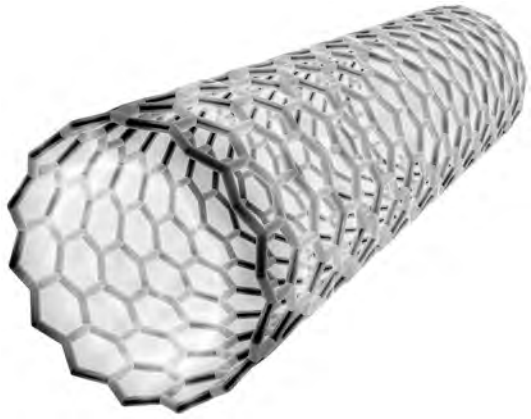

The structure and bonding in a carbon nanotube are similar to graphene.

Carbon nanotubes are used in electronics because they conduct electricity.

Explain why carbon nanotubes conduct electricity.

**[2 marks]**

**1 0 . 2** **Figure 14** shows a badminton racket.

**Figure 14**

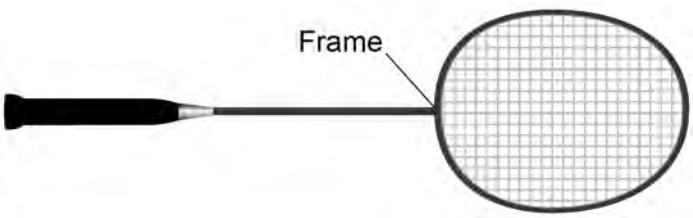

4.2.4.1 Sizes of particles and their properties

Question 11 · continued



**Table 4** shows some properties of materials.

The materials could be used to make badminton racket frames.

**Table 4**

| Material | Density in g/cm$^3$ | Relative strength | Relative stiffness |
|---|---|---|---|
| Aluminium | 2.7 | 0.3 | 69 |
| Carbon nanotube | 1.5 | 60 | 1000 |
| Wood | 0.71 | 0.1 | 10 |

Evaluate the use of the materials to make badminton racket frames.

Use **Table 4**.

**[4 marks]**

**Question 10 continues on the next page**

4.2.4.1 Sizes of particles and their properties

Question 11 · continued



Zinc oxide can be produced as nanoparticles and as fine particles.

**1 0 . 3** A nanoparticle of zinc oxide is a cube of side 82 nm

**Figure 15** represents a nanoparticle of zinc oxide.

**Figure 15**

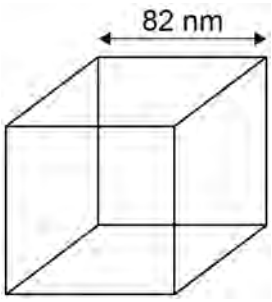


Calculate the surface area of a nanoparticle of zinc oxide.

Give your answer in standard form.

**[3 marks]**

Surface area = _____ $nm^2$

**1 0 . 4** Some suncreams contain zinc oxide as nanoparticles or as fine particles.

Suggest **one** reason why it costs less to use nanoparticles rather than fine particles in suncreams.

**[1 mark]**

### 4.2.4.1 Sizes of particles and their properties

**Question 12**

November 2021 | 8462/1F | Original Q1

**0 1** This question is about elements, compounds and mixtures.

**0 1 . 1** Substance **A** contains only one type of atom.

Substance **A** does **not** conduct electricity.

Which type of substance is **A**?

**[1 mark]**

Tick (✓) **one** box.

- Compound ☐
- Metallic element ☐
- Mixture ☐
- Non-metallic element ☐

**0 1 . 2** Substance **B** contains two types of atoms.

The atoms are chemically combined together in fixed proportions.

Which type of substance is **B**?

**[1 mark]**

Tick (✓) **one** box.

- Compound ☐
- Metallic element ☐
- Mixture ☐
- Non-metallic element ☐

4.2.4.1 Sizes of particles and their properties

Question 12 · continued



**0 1 . 3** What is the name of the elements in Group 0 of the periodic table?

**[1 mark]**

Tick (✓) **one** box.

- Alkali metals ☐
- Halogens ☐
- Noble gases ☐
- Transition metals ☐

**0 1 . 4** Which statement about the elements in Group 0 is correct?

**[1 mark]**

Tick (✓) **one** box.

- All elements in the group are very reactive. ☐
- All elements in the group form negative ions. ☐
- The boiling points increase down the group. ☐
- The relative atomic masses ($A_r$) decrease down the group. ☐

4.2.4.1 Sizes of particles and their properties

Question 12 · continued



**0 1 . 5** Neon is in Group 0.

What type of particles are in a sample of neon?

**[1 mark]**

Tick (✓) **one** box.

Atoms ☐

Ions ☐

Molecules ☐

**0 1 . 6** **Figure 1** represents part of the structure of an oxide of a metal.

**Figure 1**

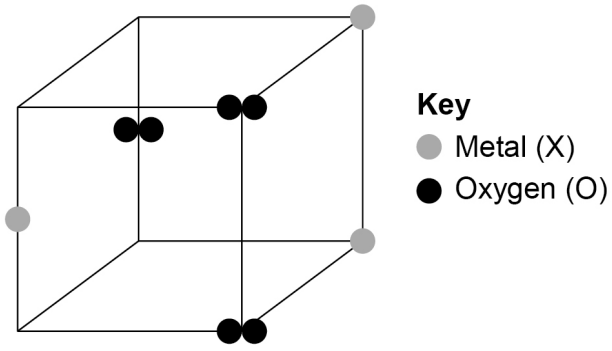


Determine the empirical formula of this oxide.

**[1 mark]**

Empirical formula = XO

4.2.4.1 Sizes of particles and their properties

Question 12 · continued



A nanoparticle of a metallic element is a cube.

**Figure 2** shows a diagram of the nanoparticle.

**Figure 2**

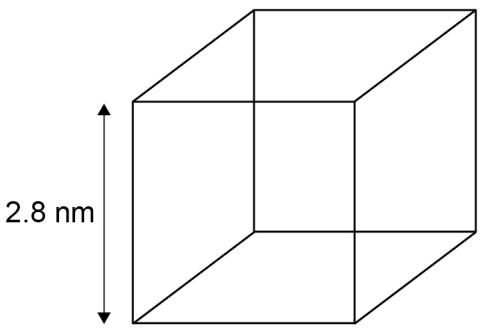


**0 1 . 7** The surface area of a cube is given by the equation:

surface area = (length of side)$^2$ × 6

Calculate the surface area of the cube in **Figure 2**.

Give your answer to 2 significant figures.

**[3 marks]**

Surface area (2 significant figures) = _____ nm$^2$

4.2.4.1 Sizes of particles and their properties

Question 12 · continued



**0 1 . 8** Fine and coarse particles of the metallic element are also cubes.

The length of a fine particle cube is 10 times smaller than the length of a coarse particle cube.

How does the surface area to volume ratio of the fine particle cube compare with that of the coarse particle cube?

**[1 mark]**

Tick (✓) **one** box.

Both surface area to volume ratios are the same. ☐

The surface area to volume ratio of the fine particle is 10 times greater. ☐

The surface area to volume ratio of the fine particle is 10 times smaller. ☐

10

**Turn over for the next question**

4.2.4.1 Sizes of particles and their properties

Question 13

June 2022 | 8462/1F | Original Q7

**0 7** This question is about small particles.

**0 7 . 1** Coarse particles, fine particles and nanoparticles are all small particles.

Which is the largest particle?

**[1 mark]**

Tick (✓) **one** box.

Coarse particle ☐

Fine particle ☐

Nanoparticle ☐

**0 7 . 2** **Figure 12** shows a cubic nanoparticle.

**Figure 12**

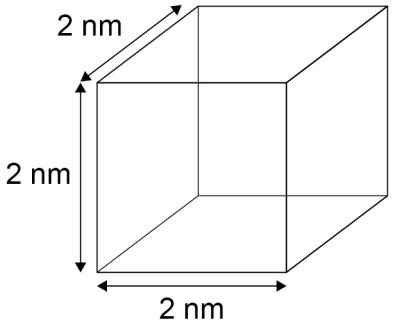


The surface area of the cubic nanoparticle is 24 $nm^2$.

Calculate:

- the volume of the cubic nanoparticle
- the simplest surface area : volume ratio of the cubic nanoparticle.

**[4 marks]**

Volume = _____ $nm^3$

Simplest surface area : volume ratio = _____ : 1

4.2.4.1 Sizes of particles and their properties

Question 13 · continued



**0 7 . 3** Catalysts made of nanoparticles are often more effective than catalysts made of normal sized particles.

Complete the sentences.

**[2 marks]**

Compared with normal sized particles, the surface area to volume ratio of

nanoparticles is _____.

This means that the mass of a nanoparticle catalyst needed to have the same effect

as the same catalyst made of normal sized particles is _____.

**0 7 . 4** Silver nanoparticles can be added to the material used to make socks.

Some facts about silver and bacteria are:

- silver nanoparticles are small enough to be breathed in
- silver is very expensive
- silver can kill bacteria
- bacteria can cause infections
- bacteria can break down sweat to produce unpleasant smells.

Suggest **one** advantage and **one** disadvantage of wearing socks containing silver nanoparticles.

**[2 marks]**

Advantage _____

_____

Disadvantage _____

_____

**4.2.4.1 Sizes of particles and their properties**

**Question 13 · continued** June 2022 | 8462/1F | Original Q7

**0 7 . 5** An atom has a radius of $1 \times 10^{-10}$ m.

A spherical nanoparticle has a radius of $1 \times 10^{-8}$ m.

How many times larger is the radius of the nanoparticle than the radius of the atom?
**[1 mark]**

Tick (✓) **one** box.

- 2 times ☐
- 10 times ☐
- 100 times ☐
- 200 times ☐

10

### 4.2.4.1 Sizes of particles and their properties

**Question 14**

June 2023 | 8462/1F | Original Q5

**0 5** This question is about small particles.

**0 5 . 1** Which type of particle is often referred to as dust?

**[1 mark]**

Tick (✓) **one** box.

- Coarse particle ☐
- Fine particle ☐
- Nanoparticle ☐

**0 5 . 2** A spherical coarse particle has a diameter of 4000 nm.

A spherical fine particle has a diameter of 200 nm.

How many times larger is the diameter of the coarse particle than the diameter of the fine particle?

**[1 mark]**

Tick (✓) **one** box.

- 2 times ☐
- 5 times ☐
- 20 times ☐
- 50 times ☐

4.2.4.1 Sizes of particles and their properties

Question 14 · continued



**0 5 . 3** **Figure 6** represents a cubic nanoparticle.

**Figure 6**

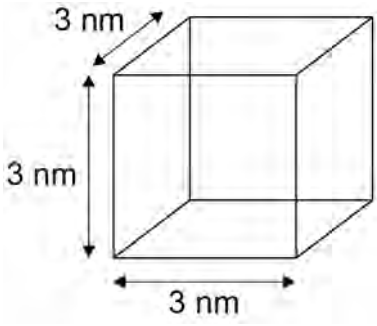


The volume of the cubic nanoparticle is 27 $nm^3$.

Calculate:

- the surface area of the cubic nanoparticle
- the simplest whole number ratio of surface area : volume for the cubic nanoparticle.

Use the equation:

surface area of cubic nanoparticle = 6 × surface area of one face

**[4 marks]**

Surface area of cubic nanoparticle = _____ $nm^2$

Simplest whole number ratio of surface area : volume = _____ :1

**Question 5 continues on the next page**

4.2.4.1 Sizes of particles and their properties

Question 14 · continued



Titanium oxide is used in some sun creams.

**0 5 . 4** Which is an advantage of using nanoparticles of titanium oxide rather than normal-sized particles of titanium oxide in sun creams?

**[1 mark]**

Tick (✓) **one** box.

- A smaller mass of nanoparticles is needed to be effective. ☐
- Nanoparticles cost more than the same mass of normal-sized particles. ☐
- Nanoparticles have a lower surface area to volume ratio than normal-sized particles. ☐

**0 5 . 5** Titanium oxide contains $Ti^{4+}$ ions and $O^{2-}$ ions.

What is the formula of titanium oxide?

**[1 mark]**

Tick (✓) **one** box.

$TiO_2$ ☐ $TiO_4$ ☐ $Ti_2O$ ☐ $Ti_4O_2$ ☐

8

### 4.2.4.1 Sizes of particles and their properties

**Question 15**

June 2024 | 8462/1F | Original Q4

**0 4** This question is about small particles.

**0 4 . 1** What is the approximate number of atoms in a nanoparticle?

**[1 mark]**

Tick (✓) **one** box.

- A few hundred atoms ☐
- A few thousand atoms ☐
- A few million atoms ☐
- A few billion atoms ☐

**0 4 . 2** Nanoparticles of some elements can be used as catalysts.

Which element is most likely to be used as a catalyst?

Use the periodic table.

**[1 mark]**

Tick (✓) **one** box.

- Aluminium ☐
- Iron ☐
- Magnesium ☐

**Question 4 continues on the next page**

4.2.4.1 Sizes of particles and their properties

Question 15 · continued



**0 4 . 3** Nanoparticles are used in sun creams and in wound dressings.

A wound dressing is placed next to the skin to prevent infection.

**Figure 8** shows a wound dressing.

**Figure 8**



**Table 2** shows some information about substances used in the form of nanoparticles.

**Table 2**

| Substance | Property |
|---|---|
| Carbon | Strong |
| Silicon dioxide | Hard |
| Silver | Kills bacteria |
| Titanium dioxide | Blocks light |

4.2.4.1 Sizes of particles and their properties

**Question 15 · continued**



Draw **one** line from each use to the best substance for that use.

**[2 marks]**

| Use | Substance |
|---|---|
| | Carbon |
| Sun creams | Silicon dioxide |
| Wound dressings | Silver |
| | Titanium dioxide |

**Question 4 continues on the next page**

4.2.4.1 Sizes of particles and their properties

Question 15 · continued



**0 4 . 4** **Figure 9** shows a cubic nanoparticle.

**Figure 9**

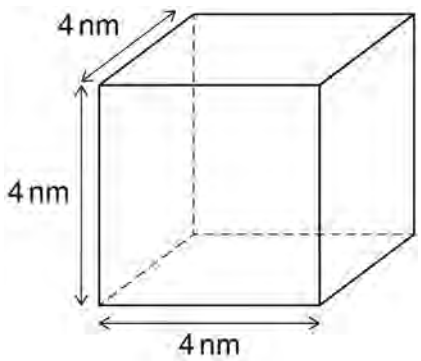


Calculate:

- the surface area of the cubic nanoparticle
- the volume of the cubic nanoparticle
- the simplest whole number ratio of surface area : volume for the cubic nanoparticle.

Use the equation:

surface area of cubic nanoparticle = 6 × surface area of one face

**[6 marks]**

Surface area of cubic nanoparticle = _____ $nm^2$

Volume of cubic nanoparticle = _____ $nm^3$

Simplest whole number ratio of surface area: volume = _____ : _____

10

4.2.4.1 Sizes of particles and their properties

Question 16

June 2025 | 8462/1F | Original Q6

**0 6** This question is about nanoparticles.

**Figure 9** represents a type of nanoparticle made of carbon atoms.

**Figure 9**

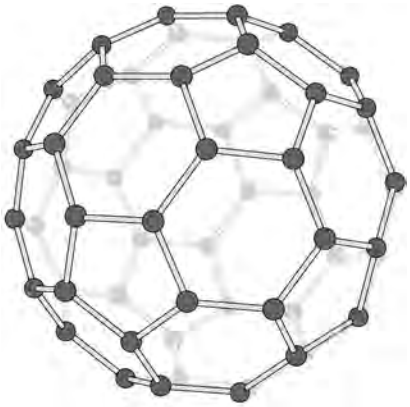

**0 6 . 1** What is the name of the type of nanoparticle in **Figure 9**?

**[1 mark]**

Tick (✓) **one** box.

Buckminsterfullerene ☐

Carbon nanotube ☐

Graphene ☐

**0 6 . 2** Nanoparticles of the type in **Figure 9** are slippery.

Which structural feature of these nanoparticles makes them slippery?

**[1 mark]**

Tick (✓) **one** box.

The nanoparticles are hollow. ☐

The nanoparticles are made of carbon atoms. ☐

The nanoparticles are spherical. ☐

4.2.4.1 Sizes of particles and their properties

Question 16 · continued



**0 6 . 3** A nanoparticle of a metal has a diameter of 15 nm.

A fine particle of the metal has a diameter of 1500 nm.

How many times larger is the diameter of the fine particle than the diameter of the nanoparticle?

**[1 mark]**

Tick (✓) **one** box.

10 ☐ $10^2$ ☐ $10^3$ ☐ $10^4$ ☐

**0 6 . 4** **Figure 10** represents a cubic nanoparticle.

**Figure 10**

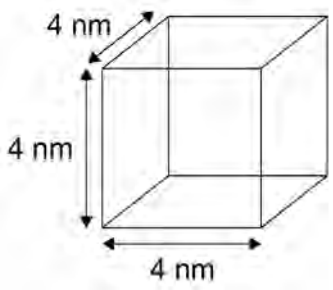


The surface area of the cubic nanoparticle is 96 $nm^2$.

Calculate:

- the volume of the cubic nanoparticle
- the simplest whole number ratio of surface area : volume for the cubic nanoparticle.

The volume of a cube = (length of side)$^3$

**[4 marks]**

Volume of nanoparticle = _____ $nm^3$

Ratio of surface area : volume = _____ : _____

Simplest whole number ratio of surface area : volume = _____ : _____

4.2.4.1 Sizes of particles and their properties

Question 16 · continued



**0 6 . 5** A substance can be used to provide a scratchproof coating on reading glasses.

The coating is a single layer of particles of the substance.

Nanoparticles are used instead of normal-sized particles.

Complete the sentences.

**[2 marks]**

When using nanoparticles instead of normal-sized particles, the thickness of the layer that can be used is much _____.

This means the amount of light passing through the layer is _____.

9