IP and MAC addressing

Computer systems (Paper 1) · revision notes

The two kinds of address used on networks: IP addresses, which identify a device on a network and are used to route data between networks, and MAC addresses, which are fixed to a device's network interface and used within a LAN. Expect questions on recognising the formats (IPv4, IPv6 and MAC), comparing the two types of address and explaining how each is used.

Key facts

- IPv4: 32 bits; four denary numbers 0–255 separated by dots
- MAC: 48 bits; six pairs of hex digits separated by colons or hyphens
- MAC address: assigned by the manufacturer, fixed to the NIC; used by switches
- IPv6: 128 bits; eight groups of four hex digits separated by colons
- IP address: assigned by the network, can change; used by routers
- IPv4 gives $2^{32} \approx 4.3$ billion addresses; IPv6 gives 2^{128}

Notes

IP addresses

- An **IP address** identifies a device on a network. It is assigned by the network the device joins, so it **can change**, e.g. when a laptop moves from home to school.
- Routers use the destination IP address to **route packets between networks** and across the Internet.
- **IPv4**: 32 bits, written as four denary numbers from 0 to 255 separated by dots, e.g. 192.168.10.27. Each number is 8 bits.

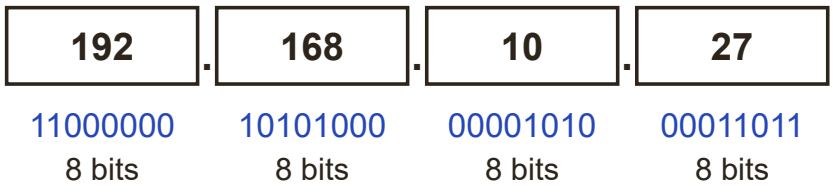

IPv4: four numbers from 0 to 255, each stored in 8 bits

- IPv4 gives 2^{32} (about 4.3 billion) addresses, which is not enough for every phone, computer, server and smart device, so **IPv6** was introduced.
- **IPv6**: 128 bits, written as eight groups of four hexadecimal digits separated by colons, e.g. 2001:0db8:0a3c:0000:0000:7e21:04f0:9b15. It gives 2^{128} addresses.

MAC addresses

- A **MAC (Media Access Control) address** is assigned to a device's **network interface card (NIC)** by the **manufacturer**. It is unique and does not change when the device moves to a different network.
- 48 bits, written as six pairs of hexadecimal digits separated by colons or hyphens, e.g. 3C:4A:92:0B:E7:15.
- **Switches** use MAC addresses to send data to the right device **within a LAN**.

Why both are needed

- The IP address gets data to the **right network**; the MAC address gets it to the **right device** on that network.
- Think of a letter to a block of flats: the street address gets it to the building, and the flat number gets it to the right door.

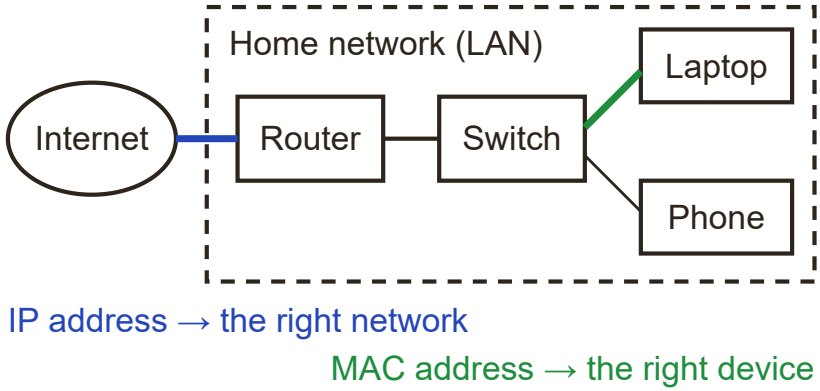

IP gets the data to the right network; MAC gets it to the right device on that network

How to answer each type of question

Identify the type of address

1 to 3 marks | Grade 3

1. Dots and four denary numbers (each 0 to 255) → IPv4.
2. Colons and groups of up to four hex digits (eight groups in full) → IPv6.
3. Six pairs of hex digits → MAC address.

Example. Identify the type of each address.
(a) 172.16.254.9 [1]
(b) 8C-1F-64-A2-3B-D0 [1]
(c) fe80:0000:0000:0000:02aa:00ff:fe28:9c5a [1]

Model answer.

(a) IPv4 (1)
(b) MAC address (1)
(c) IPv6 (1)

Compare or explain IP and MAC addresses

2 to 4 marks | Grade 5

1. Compare who assigns each address and whether it can change.
2. Compare what each is used for: routing between networks, or delivery within a LAN.
3. Compare formats: 32 or 128 bits for IP, 48 bits in hex for MAC.

Example. Amir's phone is connected to his home Wi-Fi. He then connects it to the Wi-Fi in a café. Explain what happens to the phone's IP address and to its MAC address. [4]

Model answer. The phone is given a new IP address (1), because an IP address is assigned by the network the device joins (1). The MAC address stays the same (1), because it is fixed to the phone's network interface card by the manufacturer (1).

Explain the IPv4 number range and IPv6

2 to 4 marks | Grade 7

1. Link each number in an IPv4 address to 8 bits.
2. 8 bits give 2^8 = 256 values, from 0 to 255.
3. For IPv6: IPv4 has about 4.3 billion addresses, and more devices than that need addresses.

Example. (a) Explain why 192.168.300.4 is not a valid IPv4 address. [2]
(b) Explain why IPv6 addresses were introduced. [2]

Model answer.

(a) Each number in an IPv4 address is stored in 8 bits (1), which can only hold values from 0 to 255, so 300 is too large (1).

(b) IPv4 has only about 4.3 billion addresses, which is not enough for all the devices connected to the Internet (1). IPv6 uses 128 bits, so it gives far more addresses (1).

Don't lose marks

- ✗ Saying MAC addresses are used to send data across the Internet. Routers use IP addresses between networks.
- ✗ Saying a device keeps the same IP address wherever it goes.
- ✗ Writing IPv6 addresses in denary or IPv4 addresses in hexadecimal.
- ✗ Saying an IPv4 address is 4 bits because it has four numbers. It is 32 bits (four 8-bit numbers).

More tips

Memory tricks

- MAC is Manufactured (fixed); IP is Issued by the network (can change).
- Count the separators: 3 dots → IPv4; 7 colons (in full form) → IPv6; 5 colons or hyphens between 6 pairs → MAC.
- Bits in increasing order: IPv4 32, MAC 48, IPv6 128.

Exam technique

- When comparing, write both sides in each point: 'An IP address… whereas a MAC address…'.
- State who assigns each address: it is one of the most common mark points.
- Link addresses to hardware: switch → MAC address, router → IP address.

What each grade needs

What you need to be able to do, from the first marks up to the top grade.

Grade 3

Recognise IPv4, IPv6 and MAC addresses

IPv4: four denary numbers with dots; IPv6: groups of hex digits with colons; MAC: six pairs of hex digits.

Grade 4

State who assigns IP and MAC addresses

The network assigns the IP address; the manufacturer assigns the MAC address to the NIC.

Grade 5

Describe IPv4 and IPv6 formats

IPv4 is 32 bits written as four numbers from 0 to 255; IPv6 is 128 bits written as eight groups of four hex digits.

Grade 5

Explain why IPv6 was introduced

IPv4 gives only about 4.3 billion addresses, which is not enough for all connected devices.

Grade 6

Explain how routers and switches use addresses

Routers use IP addresses to route data between networks; switches use MAC addresses to deliver data within a LAN.

Grade 7

Explain why an IPv4 number cannot exceed 255

Each part is 8 bits, which gives 2^8 = 256 values, from 0 to 255.

Free notes, Full packs, practice papers and mock exams at chhetriacademy.com. Written for this site; not taken from past papers. Stuck? 1-to-1 tutoring with a free 30-minute trial lesson.