Network topologies

4.1.8 · Networks · revision notes

The characteristics of the bus, star and mesh (full and partial) topologies: how the devices are connected, how data travels, and the advantages and disadvantages of each. Questions ask you to identify a topology from a diagram, compare topologies and recommend one for a scenario, sometimes as a 6-mark 'Discuss'.

Key facts

- Bus: a single backbone cable with a terminator at each end
- Full mesh: every device connected directly to every other device
- Bus: cheapest; a backbone break stops everything; more collisions as traffic grows
- Mesh: many routes, no single point of failure; lots of cable, expensive
- Star: each device has its own cable to a central switch
- Partial mesh: some devices connected to several others, but not all to all
- Star: a cable fault affects one device; a switch failure stops everything
- Grade 7+ only Full mesh cables = $n(n - 1) \div 2$

Notes

Bus topology

- All devices are connected to one main cable called the **backbone**, with a **terminator** at each end to stop signals reflecting back.

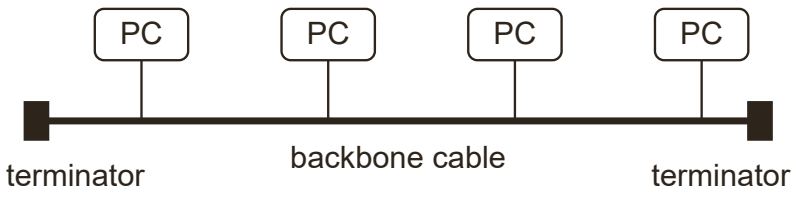

Bus: every device shares one backbone cable.

- Data sent by one device travels along the backbone to every device. Each device checks the address, and only the intended device accepts the data.
- Advantages: cheap and simple, uses the least cable, easy to add a device.
- Disadvantages: if the backbone breaks, the whole network stops; only one device can transmit at a time, so with more traffic there are more **collisions** (data must be resent) and performance falls; every device receives all the data.

Star topology

- Every device has its own cable to a central **switch**, which sends data only to the device it is addressed to.

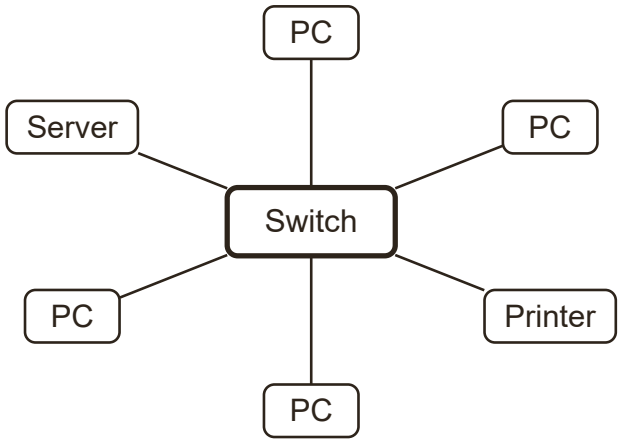

Star: each device has its own cable to the central switch.

- Advantages: if one cable fails, only that device is affected; good performance with few collisions; devices are easy to add or remove; faults are easy to find.
- Disadvantages: uses more cable than a bus, so it costs more; if the central switch fails, the whole network stops.

Mesh topology

- In a **full mesh**, every device is connected directly to every other device. In a **partial mesh**, some devices are connected to several others, but not every device is connected to every other.

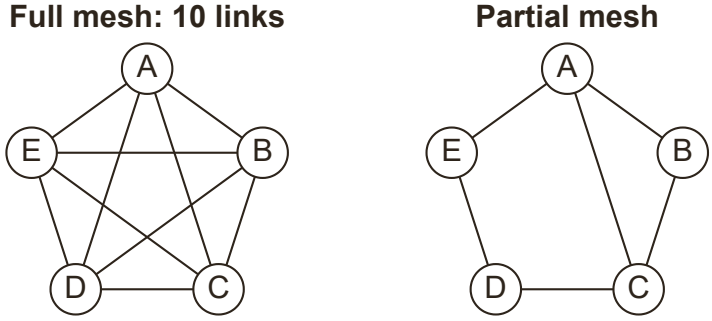

Full mesh: every device links to every other. Partial mesh: some devices have several links, but not to every device.

- There are many routes between devices, so if a link or device fails, data takes another route. There is no single point of failure, so the network is **fault tolerant**.
- Disadvantages: a wired mesh needs a lot of cable and is expensive and complicated to set up.
- A full mesh of n devices needs $n(n-1) \div 2$ connections, e.g. 5 devices need $5 \times 4 \div 2 = 10$. Grade 7+ only
- Mesh networks are often wireless (e.g. mesh Wi-Fi in a large house), which avoids the cabling. The routers of the internet form a partial mesh.

How to answer each type of question

Identify a topology, or state an advantage or disadvantage

1 mark each | Grade 3

1. Look at the diagram: one long line (bus), everything joined to one central box (star), lots of cross-links (mesh).
2. Give a specific advantage or disadvantage, e.g. 'uses less cable, so it is cheaper', not just 'cheap' or 'reliable'.

Example. (a) State the name of the topology in which every device is connected to a central switch. (1)
(b) State **one** disadvantage of this topology. (1)

Model answer.

(a) Star (1)

(b) If the central switch fails, the whole network stops working / it uses more cable than a bus, so it costs more (1)

Explain the advantages of one topology over another

2 to 4 marks | Grade 6

1. State the advantage of the first topology.
2. Contrast it with what happens in the other topology, or explain its effect.
3. Make the second advantage a different idea, e.g. reliability first, then performance.

Example. Explain **two** advantages of a star topology compared with a bus topology. (4)

Model answer. In a star, if one cable fails only the device on that cable is affected (1), whereas in a bus a break in the backbone stops the whole network (1). The switch sends data only to the device it is addressed to (1), so there are fewer collisions and the network performs better when it is busy (1).

Calculate the number of connections

1 to 2 marks | Grade 7

1. In a full mesh, each of the n devices connects to the other $n - 1$.
2. Multiply, then divide by 2, because each cable joins two devices.
3. In a star, the number of cables equals the number of devices.

Example. An office has 7 devices.
(a) Calculate the number of cables needed to connect them in a full mesh. Show your working. (2)
(b) State the number of cables needed to connect them in a star using a switch. (1)

Model answer.

(a) $7 \times 6 = 42$ (1); $42 \div 2 = 21$ cables (1)

(b) 7 cables (1)

6-mark: Discuss which topology to use 6 marks (levels-based) **Grade 8**

1. Judge each topology against the needs in the scenario: cost, performance, reliability and ease of adding devices.
2. Develop each point: say what happens and why it matters here.
3. Include the drawbacks of the topology you recommend, and how they could be reduced.
4. Finish with a justified recommendation.

Example. A company is setting up a wired network for 40 computers, 4 printers and a server on one floor of an office.
Discuss which network topology the company should use. (6)

Model answer. Marked by levels: the top band compares the topologies with developed points linked to the company and gives a supported conclusion. Points could include: in a star, each device has its own cable to a switch, so a cable fault only affects one device and new computers are easy to add; the switch sends data only to its destination, so 45 devices can work without many collisions; but a star needs more cable than a bus, and the switch is a single point of failure, so a spare switch could be kept; a bus would be cheapest but, with 45 devices, collisions would make it slow and one break in the backbone would stop everyone working; a full mesh would be very reliable but would need 45 × 44 ÷ 2 = 990 cables, far too many. Conclusion: a star gives the best balance of cost, performance and reliability for this office.

Don’t lose marks

- Saying a star network stops if any cable breaks. Only the device on that cable is cut off.
- Forgetting to divide by 2 in full mesh calculations, which counts every cable twice.
- Saying a mesh is cheap. A wired mesh needs the most cable of all.
- Describing a partial mesh as 'a mesh with some devices missing'. It is a mesh in which not every device is directly connected to every other device.
- Answering 'reliable' or 'fast' with no reason.

More tips

Memory tricks

- Bus = one road that everyone shares; star = every road leads to the switch; mesh = a web of roads with many ways round.
- Single point of failure: bus = the backbone; star = the switch; mesh = none.
- Full mesh check: 3 devices → 3 × 2 ÷ 2 = 3 cables (a triangle). If your formula gives 6, you forgot to halve.

Exam technique

- When there is a diagram, name the topology and use details from it, e.g. 'if the cable to PC 3 breaks, only PC 3 is cut off'.
- In 'Explain' questions, say what happens when something fails and who is affected.
- Show your working in cable calculations; there is often a mark for the method.
- In a 'Discuss' answer, compare at least two topologies and reach a clear recommendation.

What each grade needs

What you need to be able to do, from the first marks up to the top grade.

Grade 3

Identify bus, star and mesh from diagrams

Bus: one backbone cable; star: every device cabled to a central switch; mesh: devices joined to several others.

Grade 4

Give an advantage and disadvantage of each

For example, a bus is cheap, but a break in the backbone stops the whole network.

Grade 5

Describe how data travels in each topology

Bus: along the backbone to every device; star: through the switch to one device; mesh: by one of several routes.

Grade 6

Compare the reliability of the topologies

Explain what stops working when a cable or a central device fails in each topology.

Grade 7

Calculate the cables needed for a full mesh

A full mesh of n devices needs n(n − 1) ÷ 2 cables, e.g. 6 devices need 15.

Grade 8

Recommend a topology for a scenario

Balance cost, performance, fault tolerance and ease of expansion, and justify the choice.

Free notes, Full packs, practice papers and mock exams at chhetriacademy.com. Written for this site; not taken from past papers. Stuck? 1-to-1 tutoring with a free 30-minute trial lesson.