Diffusion

4.1.3.1 · Biology · revision notes

How substances move into and out of cells by diffusion, what affects the rate of diffusion, why surface area to volume ratio matters, and how exchange surfaces are adapted. Expect definitions, surface area to volume calculations and 'explain how this exchange surface is adapted' questions.

Key facts

- Diffusion: net movement of particles from higher to lower concentration
- Rate increases with: a bigger concentration gradient, a higher temperature, a larger surface area
- Bigger organism → smaller surface area to volume ratio
- Lungs: alveoli; small intestine: villi; fish: gill filaments; roots: root hairs
- Diffusion is passive: no energy from respiration needed
- Cube: surface area = 6 × side^2; volume = side^3
- Good exchange surface: large surface area, thin, good blood supply, ventilated

Notes

What diffusion is

- **Diffusion** is the spreading out of the particles of a gas or of a substance in solution, resulting in a **net movement** from an area of **higher concentration** to an area of **lower concentration**.

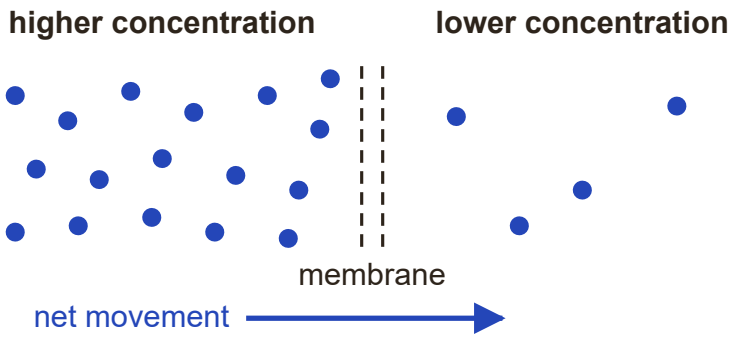

Diffusion: net movement from a higher to a lower concentration, down the concentration gradient.

- Diffusion is passive: it does not need energy from respiration.
- Oxygen diffuses from the air in the lungs into the blood, and carbon dioxide diffuses from the blood into the lungs (gas exchange).
- Urea (a waste product) diffuses from cells into the blood plasma, to be removed by the kidneys.

Factors that affect the rate

- **Concentration gradient**: the bigger the difference in concentration, the faster the rate.
- **Temperature**: the higher the temperature, the faster the particles move, so the faster the rate.
- **Surface area** of the membrane: the larger the area, the faster the rate, because more particles can cross at once.

Surface area to volume ratio

- For a cube: surface area = 6 × side^2; volume = side^3.
- Example: a 2 cm cube has a surface area of 24 cm^2 and a volume of 8 cm^3, so SA : V = 24 : 8 = 3 : 1.

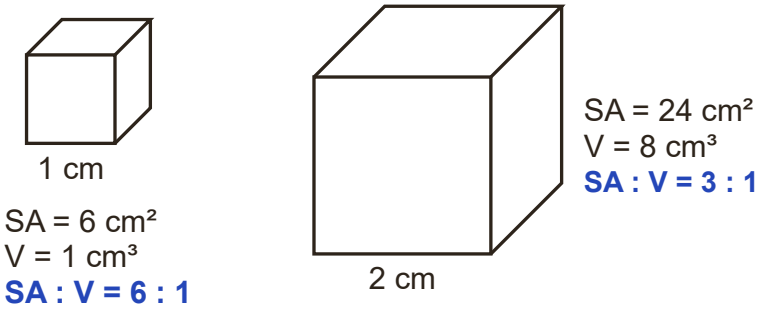

The bigger the object, the smaller its surface area to volume ratio.

- The bigger the organism, the smaller its surface area to volume ratio.
- A single-celled organism has a relatively large SA : V, so diffusion through its surface meets its needs. Large multicellular organisms have a small SA : V and long diffusion distances, so they need exchange surfaces and a transport system.

Exchange surfaces

- Exchange surfaces are more effective with: a large surface area; a thin membrane (short diffusion path); an efficient blood supply (animals); ventilation (animals, for gas exchange).
- Blood flow and ventilation keep the concentration gradient steep.
- **Lungs**: millions of alveoli (large surface area), walls one cell thick, surrounded by capillaries, ventilated by breathing.

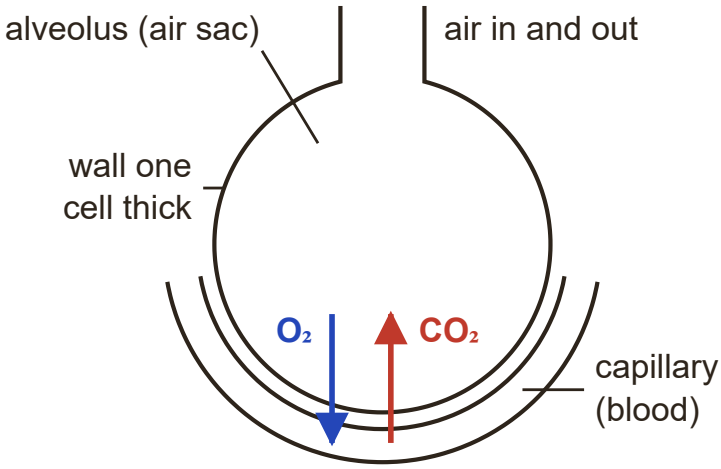

Gas exchange in an alveolus: a large surface area, a thin wall and a good blood supply.

- **Small intestine**: millions of villi (large surface area), a thin lining and a good blood supply.
- **Fish gills**: many thin gill filaments (large surface area), a good blood supply and a constant flow of water.
- **Plants**: root hairs give roots a large surface area; leaves are flat and thin, with stomata and air spaces for gas exchange.

How to answer each type of question

Define diffusion and give examples 1 to 2 marks **Grade 3**

1. Include 'net movement', 'particles' and 'from higher to lower concentration'.
2. For examples, use the ones in the specification: oxygen, carbon dioxide and urea.

Example. (a) Define diffusion.
(b) Name **one** waste product that diffuses from body cells into the blood plasma.

Model answer.

(a) The net movement of particles from an area of higher concentration to an area of lower concentration (1)

(b) urea / carbon dioxide (1)

Explain the effect of a factor on the rate of diffusion

2 marks | **Grade 5**

1. Say what the factor does to the particles or the membrane.
2. Link it to the rate: more particles cross per second.

Example. A student put cubes of agar containing an indicator into acid at 20 °C and at 40 °C. The colour of the cubes changed faster at 40 °C.
Explain why.

Model answer. At a higher temperature the acid particles have more kinetic energy / move faster (1), so they diffuse into the cubes faster (1).

Calculate a surface area to volume ratio

2 to 3 marks | **Grade 5**

1. Surface area: add up the areas of all the faces (6 faces for a cube).
2. Volume: length × width × height.
3. Divide the surface area by the volume and write the ratio as x : 1.

Example. A model cell is a cube with sides of 3 cm.
Calculate its surface area to volume ratio.

Model answer.

surface area = $6 \times 3 \times 3 = 54\ cm^2$ (1)

volume = $3 \times 3 \times 3 = 27\ cm^3$ (1)

ratio = 54 : 27 = 2 : 1 (1)

Explain how an exchange surface is adapted

3 to 4 marks | **Grade 5**

1. Name each adaptation.
2. Link each one to faster diffusion: larger area, shorter distance, steeper gradient.
3. Use the words 'surface area', 'diffusion distance' and 'concentration gradient'.

Example. Explain how the alveoli in the lungs are adapted for efficient gas exchange. [4 marks]

Model answer.

Any four from:

there are millions of alveoli, giving a large surface area (1)

the alveolus walls are one cell thick, so the diffusion distance is short (1)

each alveolus is surrounded by many capillaries / a good blood supply (1)

the blood carries oxygen away, keeping a steep concentration gradient (1)

breathing ventilates the alveoli, bringing in air with a high oxygen concentration (1)

Explain why a large organism needs exchange surfaces 2 to 3 marks **Grade 7**

1. Compare surface area to volume ratios: large organisms have a small ratio.
2. Mention the long distance from the surface to the inner cells.
3. Conclude that diffusion through the surface is too slow, so exchange surfaces and a transport system are needed.

Example. An amoeba is a single-celled organism. It gets all the oxygen it needs by diffusion through its cell membrane.
Explain why a mouse cannot get enough oxygen in this way.

Model answer. The mouse has a much smaller surface area to volume ratio (1). The distance from the body surface to the cells inside is too great, so diffusion would be too slow (1). So the mouse needs a specialised exchange surface (the lungs) and a transport system (the blood) (1).

Don't lose marks

- Leaving 'net' or 'concentration' out of the definition, or not saying what is at a higher or lower concentration.
- Saying diffusion needs energy. That is active transport.
- Forgetting that a cube has 6 faces when working out its surface area.
- Saying larger organisms have a larger SA : V ratio. They have a larger surface area but a smaller ratio.
- Saying a thin wall means 'less distance for the blood'. Say it gives a short diffusion distance.

More tips

Memory tricks

- Diffusion goes 'downhill', from high concentration to low, like a ball rolling down a slope: no energy needed.
- Exchange surface checklist: big area, thin, good blood supply, ventilated.
- For a cube, SA : V = 6 ÷ side length. A 3 cm cube gives 6 ÷ 3 = 2, so 2 : 1.
- Double the side of a cube and its SA : V ratio halves.

Exam technique

- Link each adaptation to its effect: 'thin wall, so a short diffusion distance'; 'large surface area, so more diffusion at once'.
- When you explain why blood supply or ventilation helps, use the phrase 'concentration gradient'.
- Show the surface area and volume as separate steps, with units, before giving the ratio.

What each grade needs

What you need to be able to do, from the first marks up to the top grade.

Grade 3 **Define diffusion**
The net movement of particles from an area of higher concentration to an area of lower concentration.

Grade 4

Give examples of diffusion in living things

Oxygen and carbon dioxide in gas exchange; urea from cells into the blood plasma.

Grade 5

Explain the factors that affect the rate

A bigger concentration gradient, a higher temperature and a larger surface area all increase the rate of diffusion.

Grade 5

Calculate surface area to volume ratios

Work out the total surface area and the volume, then write the ratio as x : 1.

Grade 5

Explain how exchange surfaces are adapted

Large surface area, thin membrane, good blood supply and ventilation, e.g. alveoli and villi.

Grade 7

Explain why large organisms need exchange surfaces

Their small surface area to volume ratio and long diffusion distances mean diffusion through the body surface is too slow.

Free notes, Full packs, practice papers and mock exams at chhetriacademy.com. Written for this site; not taken from past papers. Stuck? 1-to-1 tutoring with a free 30-minute trial lesson.